RAMBOLL ENVIRON

ENVIRONMENT
& HEALTH

December 30, 2016

Ms. Joanna Louie
Hazardous Substances Engineer
Permitting Division
Department of Toxics Substances Control
700 Heinz Avenue
Berkeley, California 94710

RE: RESPONSE TO SECOND NOTICE OF DEFICIENCY
STANDARDIZED PERMIT RENEWAL APPLICATION
ATLAS PRECIOUS METALS, INC.
640 SOUTH HILL STREET, SUITE 743
LOS ANGELES, CALIFORNIA 90014
EPA ID # CAL 000098454

Ramboll Environ
2200 Powell Street
Suite 700
Emeryville, CA 94608

T +1 510.655.7400
F +1 510.655.9517
www.ramboll-environ.com

Dear Ms. Louie:

Ramboll Environ US Corporation (Ramboll Environ) is timely submitting this response to the Second Notice of Deficiency for the Permit Renewal Application (the "NOD") issued by the Department of Toxic Substances Control ("DTSC") on November 23, 2016, with regard to the Standardized Permit Renewal Application for Atlas Precious Metals, Inc. ("ATLAS"). The permit renewal application was submitted for the ATLAS facility located at 640 South Hill Street, Suite 743 in Los Angeles, California (the "facility"). As you requested, we have provided a written response to each of the deficiencies identified in the NOD in this letter and we have attached the following:

- A complete revised permit renewal application, consisting of a revised version of the Operations Plan in Attachment A, Form 1093A in Attachment B, and air permits in Attachment C.
- A redline/strikeout version of the permit renewal application showing changes made to the text of the previous version of the application, presented in Attachment D.

As requested, we are submitting two hardcopies and one electronic copy of these documents. The hardcopies will be delivered under separate cover.

RESPONSE TO DTSC'S SPECIFIC COMMENTS IN THE NOD

Each comment in DTSC's NOD letter is presented below, followed by ATLAS' response and the page number on which the comment is addressed. For ease of reference, responses are presented in in blue italicized font.

1. Section 10.6 Confirmation Sampling Plan for Structures, Equipment and Buildings: In this section, Atlas states that they will take wipe samples of the storage areas and floor beneath each type of processing unit and

one rinseate sample. Because the floor is made of concrete, wipe samples cannot be used to show clean closure. Atlas can show clean closure by taking a rinseate sample and 1 QA/QC sample from the third rinse of the pressure wash. The rinseate samples must show nondetect. Atlas must state in their Closure Plan the detection limit for each parameter. Additionally, Atlas must take a background rinse sample of the water before pressure washing for comparison. Table 8 must be updated to show samples that will be taken.

This comment is addressed on page 40 of the revised Standardized Permit Application Operations Plan ("Operation Plan"). Atlas and Ramboll Environ previously discussed this comment with DTSC; as was agreed during that discussion, in addition to addressing the other elements of this comment, the application has been revised to state that rinseate sample concentrations must not be above tap water concentrations (as opposed to being nondetectable).

2. Section 10.8 Analytical Test Methods: In this section, Atlas states "If concentrations in processing and storage areas are significantly higher than concentrations in background areas, decontamination procedures will be repeated." This sentence must be modified. If the processing and storage area analysis do not meet or are below nondetect levels, then the decontamination process must be repeated.

   This comment is addressed, consistent with the parties' agreement that decontamination procedures will be repeated if rinseate sample concentrations are higher than concentrations of metals in the facility's tap water, on page 41 of the revised Operation Plan.

3. Section 1 0.9 Closure Cost Estimate Table 9: Table 9 details the closure cost estimate. The closure plan states that Atlas will leave the units on site, sell the units or scrap the units. The closure cost estimate must be written to reflect third party costs and if DTSC or another third party were to close the site. DTSC or a third party will not leave the units on site or sell the units. Table 9 doesn't include costs associated with disposal and transportation of the hazardous treatment units. The costs for transportation and disposal of the hazardous waste treatment units as hazardous waste must be included in the closure cost estimate. A zero cost is not allowed.

   Triple rinsing or more may be required for decontamination of storage and process areas, the cost estimate must be revised to assume a minimum of 1 gallon per square foot as part of the washwater generation cost for floor and wall cleaning.

   This comment is addressed on pages 41-42 of the revised Operations Plan. The revised closure estimate presented in the revised Operations Plan has been discussed with and approved by DTSC's cost estimator.

CLOSING

With this submittal, ATLAS believes that it has provided DTSC Department with a timely and complete permit renewal application that addresses all of DTSC's comments in the NOD. The permit's renewal is critical to the facility's continued operation, and ATLAS is committed to providing all of the information necessary for DTSC to renew its permit. Please contact me at your earliest convenience by telephone at 541.386.3411 or by email at rvandegriend@ramboll.com if you have any questions

regarding the attached submittal or if you require additional information. We look forward to receiving DTSC's completeness determination and to cooperating with you toward the prompt renewal of ATLAS' permit.

On ATLAS' behalf, thank you very much for your assistance.

Sincerely,

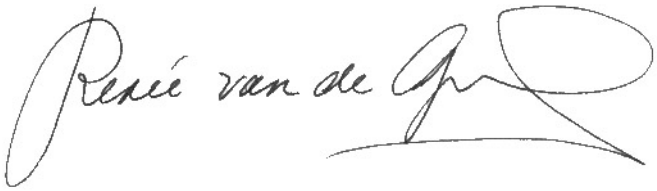

Renée van de Griend, PhD, PE
Principal Consultant

Attachments

cc: Ani Samuelian, Atlas Precious Metals
Mark Goshgarian, Goshgarian & Marshall
Geoffrey Tichenor, Stoel Rives LLP

ATTACHMENT A
OPERATIONS PLAN

STANDARDIZED PERMIT APPLICATION OPERATION PLAN

ATLAS PRECIOUS METALS, INC.
640 SOUTH HILL STREET, SUITE 743
LOS ANGELES, CA 90014

Prepared for:
Atlas Precious Metals, Inc.
Los Angeles, California

Prepared by:
Ramboll Environ US Corporation
Emeryville, California

Date:
December 30, 2016

Project Number:
08-38578A

RAMBOLL ENVIRON

TABLE OF CONTENTS

1.	FACILITY IDENTIFICATION / LOCATION	1
2.	FACILITY OPERATION AND HAZARDOUS WASTE MANAGEMENT	3
3.	WASTE ANALYSIS PLAN	6
4.	FACILITY DESIGN - STORAGE	11
5.	FACILITY DESIGN - TREATMENT	14
6.	TRAINING PLAN	22
7.	SECURITY	26
8.	INSPECTION PLAN	27
9.	CONTINGENCY PLAN	32
10.	CLOSURE PLAN	38
11.	CERTIFICATIONS	45
12.	FINANCIAL RESPONSIBILITY	50

FIGURES

Figure 1	Site Location Map
Figure 2	Tax Assessor Map
Figure 3	Facility Floor Plan
Figure 4	Sweeps Storage and Processing Room
Figure 5	Flowchart for Processing Jewelry Sweeps
Figure 6	Emergency Response Equipment and Evacuation Routes

EXHIBITS

Exhibit 1	Generator Waste Certification
Exhibit 2	Refining Receipt
Exhibit 3	Safety Data Sheets for Polishing Compound
Exhibit 4	Laboratory Analysis Results
Exhibit 5	Example Post-Processing Assay
Exhibit 6	Trust Agreement

1. FACILITY IDENTIFICATION / LOCATION

1.1 FACILITY IDENTIFICATION

Atlas Precious Metals, Inc.
640 South Hill Street, Suite 743
Los Angeles, California 90014
(213) 622-9995

EPA ID number CAL000098454

The facility is located within a commercial zoning area with zoning designation F1. Neighboring businesses consist of jewelry merchants. The nearest schools, residences, and hospitals are approximately one mile away from the facility.

This application is for a permit renewal. No changes to the facility or to facility operations are planned.

1.2 PREPARER OF STANDARDIZED PERMIT APPLICATION

Ramboll Environ US Corporation
Renée van de Griend, PhD, PE
(541) 386-3411

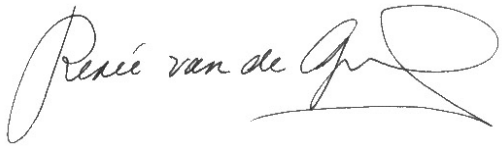

December 30, 2016

Signature

Date

1.3 OWNER / OPERATOR SIGNATURES AND CERTIFICATION

I certify under penalty of law that this document and all attachments were prepared under my direction or supervision in accordance with a system designed to assure that qualified personnel properly gather and evaluate the information submitted. Based on my inquiry of the person or persons who manage the system, or those persons directly responsible for gathering the information, the information submitted is, to the best of my knowledge and belief, true, accurate, and complete. I further certify that the property owner has been informed that a hazardous waste facility will be operated on the premises. I am aware that there are significant penalties for submitting false information, including the possibility of fine and imprisonment for knowing violations.

Owner Signature	Joe Samuelian Print Name	12/30/16 Date
Operator Signature	Joe Samuelian Print Name	12/30/16 Date

1.4 FACILITY LOCATION MAP AND SITE LAYOUT DIAGRAM

The facility is a leased parcel of approximately 2,970 square feet located on the seventh floor of the St. Vincent Jewelry Center Building in the downtown Los Angeles jewelry district. The facility location is indicated on Figure 1.

1.5 LEGAL DESCRIPTION OF PROPERTY

Assessor parcel number (APN): 5144003042

SUBDIVISION OF BLK 18 ORD'S SURVEY EX OF ST LOTS 13 THRU 20 BLK 18

The assessor's parcel map is shown on Figure 2.

1.6 CONFIDENTIALITY REQUESTS AND JUSTIFICATIONS

Not applicable.

2. FACILITY OPERATION AND HAZARDOUS WASTE MANAGEMENT

Atlas Precious Metals, Inc. (ATLAS) prepares jewelry polishing/sweeps (herein referred to as the material or sweeps) for jewelry manufacturers in the Los Angeles area. The sweeps that are received are usually raw (as produced in the polishing process) or prepared by the manufacturer by drying, and are processed by ATLAS in order to determine the value of the precious metals within the sweeps and to prepare the sweeps for further reclamation. The sweeps are considered to be hazardous waste under federal and California environmental law. Recycling of the sweeps for precious metal content is excluded from federal Resource Conservation and Recovery Act (RCRA) permitting requirements under Title 40, Part 266, Subpart F of the Code of Federal Regulations. This exclusion has not been adopted by the State of California, which requires ATLAS to maintain a standardized permit.

A scaled facility diagram showing areas showing the floorplan of the facility is shown on Figure 3. The Sweeps Storage and Processing Room, which comprises the portion of the facility that is the subject of this Operations Plan, is shaded on Figure 3 and shown on a larger scale on Figure 4. ATLAS' process consists of the steps described below, as summarized on the simplified process flow diagram presented on Figure 5.

<u>Step 1: Material Receiving</u>
Material is received by ATLAS by one of the following two methods:

- The jewelry manufacturer (generator) transports up to 50 pounds of material with a bill of lading and without a manifest.
- The jewelry manufacturer (generator) ships material to ATLAS via a certified hazardous waste hauler and under uniform hazardous waste manifest.

The jewelry manufacturer (generator) that ships the material to ATLAS must fill out a certification form that states that this material is polishing/sweeps material from their normal manufacturing operation (Exhibit 1). This material is inspected by ATLAS' Production Foreman to verify that the material is similar to previous material received from this manufacturer. On acceptance of the material, the Production Foreman weighs the material and assigns a refining receipt (Exhibit 2) that will remain with the material during the ATLAS process. The Production Foreman then schedules the material for processing.

<u>Step 2: Drying</u>
The accepted material is loaded into stainless steel trays. The typical load per tray is between 40 and 50 pounds. The trays are charged to one of two roaster kilns for drying. The drying cycle is approximately two hours at up to 1, 335 degrees Fahrenheit (°F). The trays are then removed from the kiln and are allowed to cool for approximately two hours on drying racks. The material typically loses between 20 to 30 percent of its original weight in this drying process.

<u>Step 3: Milling</u>
The dry cooled material is processed in one of two Bico-Braun ball mills for size reduction to less than 60 mesh. The typical milling charge is 30 to 40 pounds with a cycle time of 15 to 20 minutes. This reduction is necessary to obtain a reliable sample for an assay to determine the amount of precious metals in the material.

Step 4: Sizing
The milled material must be sized to guarantee that the ultimate assay sample is less than 60 mesh in size. The material is processed in a Sweco Viro-Energy Separator using 60 mesh screens.

Step 5: Blending
The outturn from the sizing step is blended in a Sepor Conical Blender. The material is blended for one hour and then sampled using a sampling probe. The sample size is approximately 1 pound. The blended material is discharged into a container to be transferred to the process storage area.

Step 6: Material Hold and Release
The material is held in the process storage area in individual lots until it has been assayed and the manufacturer has been notified of and agreed with the assay results. The material is then released by the manufacturer, and the released lot is transferred to the shipping area to be consolidated for shipping.

Step 7: Shipping
The individual lots are consolidated in the shipping area prior to manifesting for transportation to a precious metals refiner. The combined manifested lots are shipped on a weekly basis

The equipment and storage areas are summarized on Tables 1 and 2, respectively. Additional equipment details are presented in Section 5.

TABLE 1: EQUIPMENT IDENTIFICATION SUMMARY			
EQUIPMENT	**UNIT ID**	**DIMENSIONS (inches)**	**MAXIMUM CAPACITY (pounds)**
Roasting Kiln #1	1	32 x 40 x 32	50
Roasting Kiln #2	2	32 x 40 x 32	50
Ball Mill #1	3	12 x 12	30
Ball Mill #2	4	12 x 12	30
Screen #1	5	18 (diameter)	50
Screen #2	6	24 (diameter)	50
Blender	7	30 x 40 (cone)	400

TABLE 2: STORAGE AREA SUMMARY				
STORAGE AREA	**UNIT ID**	**DIMENSIONS (feet)**	**MAXIMUM CAPACITY (pounds)**	**CONTAINER SIZE (gallons)**
In process	8	6 x 9	1,500	5, 10, 15, 30
Shipping	9	5 x 9	1,500	30, 55

Procedures used at the facility to prevent undue exposure of personnel to hazardous waste consist of use of personal protective equipment (e.g., gloves, aprons, safety glasses) during personnel handling of sweeps. In addition, air emissions from the kilns are routed to an afterburner that exhausts on the roof. Because the sweeps are in solid form and consist of metals found in jewelry that are designed to be worn next the skin, personnel hazards associated with handling the sweeps are low.

3. WASTE ANALYSIS PLAN

3.1 DESCRIPTION OF WASTE STREAM

ATLAS accepts only one type of waste, Jewelry Polishing and Sweeps, which exhibits the RCRA and California hazardous characteristic of toxicity, as detailed below.

Process or industry that generates the waste: Jewelry Manufacturing

Description: Jewelry polishing and sweeps (sweeps) consist of dust-like material that is grayish in color and that contains precious metals, non-precious metals, and polishing compound associated with the manufacturing of jewelry products. The polishing compound, which comprises approximately 20 to 30 percent of the sweeps, is a non-hazardous material that contains silica, stearic acid, and wax, as indicated on the representative Safety Data Sheets (SDSs) presented in Exhibit 3.

Process that generates the waste: Sweeps are generated by jewelry manufacturers during finishing of jewelry products. Jewelry does not have an acceptable finish after casting in the manufacturing process and the surfaces must be polished. This is accomplished by using a polishing wheel that contains a non-hazardous polishing compound, which results in generation of dust and grindings (sweeps) consisting of precious and nonprecious metals and polishing compound. The sweeps are collected at the manufacturing facilities and managed for recycling for precious metals content. ATLAS' process prepares the sweeps for determination of precious metals content to allow assignment of monetary value prior to delivery of the sweeps to a precious metal recycling facility.

Hazardous constituents: Based on sample analysis (see Section 3.2.5 below), the sweeps have been confirmed to exhibit the RCRA or California hazardous characteristic for toxicity (as specified below) for barium, cadmium, chromium, copper, nickel, silver, and zinc, and, potentially, lead. Other metals that may be present but at concentrations below state or federal hazardous waste thresholds include arsenic, beryllium, cobalt, mercury, molybdenum, and vanadium.

RCRA Waste Code: D007 (chromium)

California Waste Code: 172 (Metal dust and machining waste)

Hazards: Toxicity. The material contains only metals, none of which are in ignitable or reactive form, and nonhazardous polishing compound. The material does not exhibit characteristics of ignitability, reactivity, or corrosivity.

3.2 WASTE ANALYSIS

3.2.1 Parameters for Analysis

The sweeps contain metals and a non-hazardous polishing compound. Accordingly, parameters selected for analysis include metals.

3.2.2 Test Methods

Samples are analyzed for total metals using EPA Method 6010B for California Assessment Manual (CAM) 17 metals except mercury, which is analyzed using EPA Method 7471A.

In order to assess whether the sweeps exhibit the RCRA characteristic of toxicity, samples are also analyzed for leachable metals using the Toxicity Characteristic Leaching Procedure (TCLP). The

extraction procedure is conducted in accordance with EPA Method 1311, followed by analysis for metals using EPA Method 6010A and 7471A (mercury only).

In the event that samples are not hazardous for total metals by comparison to the Toxicity Threshold Limit Concentration (TTLC) values or for leachable metals by comparison to TCLP values, samples will also be analyzed for soluble metals using the Waste Extraction Test (WET) for comparison to Soluble Threshold Limit Concentration (STLC) values. If the sampled waste is not hazardous by comparison to STLC values, samples will be analyzed for acute aquatic toxicity using the procedure specified in "Static Acute Bioassay Procedures for Hazardous Waste Samples," California Department of Fish and Game, Water Pollution Control Laboratory, revised November 1988.

3.2.3 Sampling

Representative samples are collected from a container of pre-processed sweeps using a clean scoop. The material is placed into a sealed and labeled sample container for delivery to a California certified environmental analytical laboratory under chain of custody control.

3.2.4 Frequency of Analysis

One representative sample will be collected and analyzed for total metals on an annual basis (i.e., each calendar year) to satisfy DTSC's requirement for periodic waste verification testing.

3.2.5 Results of Sampling and Analysis

ATLAS conducted analysis of two representative samples of pre-processed sweeps in January 2016 to verify waste characteristics of the sweeps received at the facility. Samples were analyzed for total CAM 17 metals for comparison to TTLC thresholds and for leachable RCRA metals using the TCLP. The laboratory results of these analyses are presented in Exhibit 4 and summarized below on Tables 3 and 4. The results of previous total metals test results for samples collected at the facility in 2002 (reported in the original permit application dated December 9, 2010) are also presented on Table 3.

As indicated on Table 3, total metals concentrations of barium, cadmium, chromium, copper, nickel, silver, and zinc exceeded their respective TTLC thresholds in one or more samples, and the sweeps are confirmed to be hazardous waste under California regulations for these constituents. As indicated on Table 3, the totals metals concentrations are also compared to 20 times the TCLP values to assess constituents that could potentially exhibit the RCRA characteristic of toxicity. This multiplier reflects the effective dilution that results from the extraction procedure. These comparisons (when the maximum theoretical leaching potential is applied) suggested that the total metals concentrations of barium, cadmium, chromium, lead, and silver could cause the sweeps to potentially fail TCLP testing. Accordingly TCLP testing was performed. As indicated on Table 4, TCLP testing indicates that only chromium is present above its TCLP threshold.

As indicated on Table 3, totals metals concentrations are also compared to 10 times the STLC to assess additional constituents that may potentially exceed California STLC thresholds for which the sweeps are not already confirmed to be hazardous under the TTLC or TCLP. As indicated on Table 3, the only additional constituent for which the sweeps may be hazardous based on comparison to 10 times the STLC is lead. All other constituents present in concentrations more than 10 times the STLC are already confirmed to be hazardous by total or TCLP concentrations. Additional testing for confirmed STLC exceedances is not warranted, because the sweeps are confirmed by the above-described test results to be hazardous waste under both RCRA and California toxicity criteria. Similarly, acute aquatic toxicity testing is not warranted.

Table 3: Total Metals Concentrations in Sweeps								
Constituent	Concentration (milligrams per kilogram)							
	Sweeps #1	Sweeps #2	May #1	CL-1	LA Classic #1	TTLC	20X TCLP	10X STLC
	1/13/16	1/13/16	10/11/02	10/11/02	10/11/02			
Antimony	ND<50	ND<110	ND<3	ND<3	ND<3	500	--	150
Arsenic	34	ND<34	ND<0.5	ND<0.5	ND<0.5	500	100	50
Barium	700	790	**11,100**	**10,400**	49.2	10,000	2,000	1,000
Beryllium	5.1	ND<5.6	ND<0.5	ND<0.5	ND<0.5	75	--	7.5
Cadmium	**100**	ND<5.6	**46.3**	**22.9**	**149**	100	20	10
Chromium	**580**	**400**	45.6	8.75	**145**	500/ 2,500*	100	50/ 5,600*
Cobalt	28	73	2.29	ND<0.5	7.02	8,000	--	800
Copper	**8,200**	**35,000**	**14,500**	**16,800**	**18,000**	2,500	--	250
Lead	**480**	**77**	6.64	8.44	10.7	1,000	100	50
Mercury	0.15	0.097	NA	NA	NA	20	4	2
Molybdenum	65	100	ND<1	1.57	23.3	3,500	--	3,500
Nickel	**710**	**4,200**	**2,510**	**1,640**	**207**	2,000	--	200
Selenium	ND<15	ND<34	ND<1	ND<1	ND<1	100	20	10
Silver	**500**	**570**	**357**	**375**	**279**	500	100	50
Thallium	ND<50	ND<110	ND<1	ND<1	ND<1	700	--	70
Vanadium	33	39	2.73	0.565	13.5	2,400	--	240
Zinc	**4,900**	**8,600**	**4,650**	**5,100**	**5,840**	5,000	--	2,500

Notes:

ND = Not detected

NA = Not analyzed

*First value is for chromium VI compounds and second value is for chromium and chromium III compounds. The laboratory analyses did not distinguish between chromium VI and chromium III, so the most conservative thresholds are used for comparison.

Results in **bold red** exceed a regulatory threshold.

Results in **bold blue** exceed 20 times the TCLP and/or 10 times the STLC, indicating total concentrations are theoretically high enough (when maximum theoretical leaching potential is assumed) to fail the TCLP and/or STLC, if tested.

Table 4: TCLP Metals Concentrations in Sweeps		
Constituent	**Concentration (milligrams per liter)**	
	Sweeps #1 1/13/16	**TCLP Threshold**
Arsenic	ND<0.2	5
Barium	1.0	100
Cadmium	ND<0.1	1
Chromium	**13**	5
Lead	ND<0.1	5
Mercury	ND<0.002	0.2
Selenium	0.33	1
Silver	ND<0.2	5
NOTES: ND = Not Detected		

3.3 PRE-ACCEPTANCE CRITERIA

ATLAS only accepts waste consisting of sweeps generated by manufacturers of precious metals jewelry. ATLAS' pre-acceptance criteria requires generators that deliver sweeps to the facility to provide a certification stating each delivery consists only of sweeps generated during jewelry manufacturing and does not contain any materials other than metal dust/grindings and polishing compound. An example of this document is presented in Exhibit 1.

ATLAS does not require generators to provide chemical analyses of waste shipments as pre-acceptance criteria because it does not place limits on the metals concentrations within the sweeps (other than requiring that the sweeps are generated during jewelry manufacturing and thus contain precious metals) and because there are no other chemical analyses that would provide useful information regarding the sweeps' treatment or storage by ATLAS. The hazardous properties and constituents of the sweeps are well known based on their source (jewelry manufacturing). Other than metals, no other hazardous materials are used in the jewelry manufacturing process to produce the sweeps, and hence -- in ATLAS' and the industry's experience -- no other contaminants would be potentially present in the sweeps.

3.4 INSPECTION AND FINGERPRINTING

Upon receipt of the waste and after verifying the information on the manifest or other shipping document, ATLAS inspects and analyzes the contents of each individual container to confirm that the delivered material is consistent with jewelry sweeps.

Specifically, ATLAS conducts the following inspection and analysis of each individual container of waste upon receipt:

Parameter	Test Method	Criteria
Acceptable Color	Visual inspection	Gray, tan, or metallic
Acceptable Particle size	Visual inspection	No larger than ⅛ inch

ATLAS will contact the generator before processing shipments of waste that are determined to be nonconforming with the acceptance criteria for the color and/or particle size parameters.

3.5 OUTGOING WASTE SHIPMENT ANALYSIS

ATLAS collects a sample of each individual batch of sweeps following treatment and sends the sample to a laboratory for an assay of gold, platinum, hand silver. The results of the assay provide the information needed to assign a monetary value to the sweeps. In addition, the assay provides confirmation that the sweeps contain precious metals and can be accepted at a precious metals recovery facility. An example of an assay is presented in Exhibit 5.

3.6 PERIODIC GENERATOR PROFILE VERIFICATION

ATLAS requires generators to update their pre-acceptance certifications on an annual basis. In the event that ATLAS receives a waste shipment that is determined to be inconsistent with the sweeps in terms of color and particle size, ATLAS will contact the generator and require the generator to provide additional information regarding the process that generated the waste. If the generator is unable to resolve the waste discrepancy satisfactorily, ATLAS will take steps consistent with California's regulations (e.g., 22 CCR 66264.72, where applicable) to reject the waste shipment. In addition, ATLAS may reject further waste shipments from that generator. A similar procedure will be followed if a post-processing assay indicates that the material assayed does not contain precious metals.

4. FACILITY DESIGN - STORAGE

4.1 STORAGE AREAS FOR DRUMS / CONTAINERS / TANKS / OTHER DEVICES

There are two storage areas for containers of sweeps, the In-Process Storage Area, which is used to store the processed jewelry sweeps prior to the generator's acceptance of the assay result, and the Shipping Area, which is used to store the processed jewelry sweeps after the generator accepts the assay results and prior to shipment by a licensed hazardous waste transporter to a recycling facility.

Each batch of sweeps received from a generator maintains the same lot number from the time of acceptance until it is shipped offsite after processing and assaying, so the facility has a record tracking management and movement of each batch of the materials at all times.

The locations of the two storage areas are indicated on Figure 4, and a summary of the physical and other properties of the two storage areas are summarized on Table 5. The In-Process Storage Area and Shipping Area are shown on Photographs 1 and 2, respectively.

Table 5: Storage Areas

Property	In-Process Storage Area	Shipping Area
Dimensions	6 feet x 9 feet	5 feet x 9 feet
Location	East end of facility	West end of facility
Maximum capicity	1,500 pounds	1,500 pounds
Container types	5-, 10- 15-, and 35-gallon DOT containers	35- and 55-gallon DOT containers
Maximum container stacking height	2	1
Incompatibility separation	Not applicable – only sweeps stored here	Not applicable – only sweeps stored here
Secondary containment/berm height	Not required – only solids stored (processed sweeps)	Not required – only solids stored (processed sweeps)
Storage times	Average less than one week, maximum one year	Average two weeks, maximum one year
Inspection frequency	Weekly	Weekly
Aisle space	Minimum 30”	Minimum 30”
Distance of ignitable and reactive waste from property line	Not applicable – sweeps are not ignitable or reactive	Not applicable – sweeps are not ignitable or reactive

Photograph 1: In-Process Storage Area

Photograph 2: Shipping Area

4.2 HAZARDOUS WASTES STORED

The only wastes stored in the In-Process Storage Area and the Shipping Area consist of processed sweeps. Information regarding the processed sweeps is presented below:

- Common waste chemical name(s): Jewelry polishing and sweeps, also known as sweeps
- EPA hazardous waste number: D007 (chromium)
- California hazardous waste number: 172 (Metal dust and machining waste)
- Specific gravity: Varies based on metals and particle size. May range from approximately 1 to 10.
- Vapor pressure: Not applicable
- Flame point/auto-ignition temperature: Not applicable
- pH: Not applicable
- Color: grey

4.3 STORAGE DEVICE / EQUIPMENT DESCRIPTION

Storage equipment in the In-Process Storage Area consists of DOT containers with capacities of 5, 10, 15, and 35 gallons. Storage equipment in the Shipping Area consists of DOT containers with capacities of 35 gallons and 55 gallons.

4.4 SECONDARY CONTAINMENT SYSTEM FOR STORAGE AREAS

The facility does not store liquid wastes and the storage areas have an impermeable floor inside the building, so secondary containment requirements are not applicable.

4.5 STORAGE OF IGNITABLE, CORROSIVE, OR REACTIVE HAZARDOUS WASTE

The facility does not transfer or store ignitable, corrosive or reactive wastes

4.6 SPECIFIED AIR EMISSIONS CONTROLS

Air emissions standards are not applicable to the containers in the two storage areas.

5. FACILITY DESIGN - TREATMENT

5.1 TREATMENT PROCESS DESCRIPTION AND FLOW DIAGRAM

Treatment process: Treatment equipment consists of two kilns, two ball mills, two vibratory screens, and a cone blender.

Equipment operation: Information pertaining the operation equipment is presented below.

- Chemicals: No chemicals are added to the process.
- Process type: The process is a batch process.
- Feed rate: The batch size for each piece of equipment is 50 pounds or less and is added all at once.
- Chemical reactions: Not applicable.
- Products and by-products: The product of the treatment process consists of jewelry polishing / sweeps (sweeps) from which polishing compound has been removed. There are no byproducts.
- Flow Process Diagram: A diagram showing existing treatment process units is presented as Figure 5. Materials are transferred between different process units manually.
- Enterable equipment: None of the equipment is large enough to be enterable.
- Aisle space: At least 30 inches of aisle space is maintained between equipment.
- Waste cutoff systems: The process is fed by batch, under the operator's control, and there is no need for an automatic or manual feed waste safety cutoff system.
- Overfill prevention: There are no bypass systems, standby tanks or a backup plan to prevent overfills, as the equipment is sized to contain the largest batch in its entirety.
- Pressure control or pressure release controls: Not applicable.
- Temperature controls and temperature safety cutoffs: The afterburners on the roasting kiln are equipped with temperature monitors and temperature recording devices, as per the requirements of the facility's air permit. There is also a high temperature safety switch in each kiln that shuts off the flow of natural gas if the temperature inside the kiln exceeds 1,335 degrees Fahrenheit. There is also a manual shutoff valve.
- Liquid level indicators**:** No liquids are processed in the equipment, and hence there are not liquid level indicators.

- Vapor control: Any organic chemicals in the polishing compound are volatilized in the roasting kilns in combusted in the afterburners, which operate at 1800 degrees Fahrenheit.

- Effectiveness of treatment: The process is not used for removal of hazardous waste constituents, but rather to remove nonhazardous polishing compound to allow assay of the sweeps for valuation based on precious metals content.

- Prevention of releases to surface soils, surface water, or wetlands: The facility is located on the seventh floor of the building and all operations are conducted inside the building. Therefore, there is no potential for releases of hazardous waste to reach surface soils, surface water, or wetlands.

- Prevention of releases to air: The roasting kilns are equipped with afterburners to combust organic compounds. The South Coast Air Quality Management District does not require any additional air pollution control equipment.

5.2 HAZARDOUS WASTES TREATED

The waste and physical properties of hazardous waste that is treated in the process is as follows:

- Common waste chemical name: Jewelry polishing and sweeps, also known as sweeps

- EPA hazardous waste number: D007 (chromium)

- California hazardous waste number: 172 (Metal dust and machining waste)

- Specific gravity: Ranges from approximately 1 to 10

- Vapor pressure: Not applicable

- Flame point/auto-ignition temperature: Not applicable

- pH: Not applicable

- Color: Gray

5.3 TREATMENT DEVICE/EQUIPMENT DESCRIPTION

Treatment equipment consists of two kilns, two ball mills, two vibratory screens, and a cone blender.

Kilns: The kilns are constructed of steel with a refractory liner. Each kiln measures 32 inches by 40 inches by 32 inches and is used to dry jewelry sweeps. Each unit employs an afterburner measuring 17 inches by 17 inches by 37 inches. The kilns are shown on Photograph 3.

Each kiln is a Baker Supply Model GK-1 with a 250,000-BTU/hour natural gas-fired low NOx burner and an integral 250,000-BTU/hour natural gas-fired afterburner. ATLAS does not currently have engineering drawings of the kilns because they were purchased by the former owner/operator of the facility. The jewelry sweeps are placed into the kilns and the temperature in the kilns is increased to up to 1,335 degrees Fahrenheit. The polishing compound residue in the sweeps is combusted and the

combustion exhaust gases exit through an afterburner that operates at 1,800 degrees Fahrenheit. The kilns are operated on a batch basis with a typical batch size of 40 to 50 pounds per batch. The typical drying cycle is two hours. Facility personnel monitor the temperature of the kilns and the afterburners and the cycle time during operations.

The kilns are operated under air permits issued by the South Coast Air Quality Management District (SCAQMD) that specifies maintenance and operating conditions for the kilns and afterburners. All kiln emissions are vented to the afterburners, effectively eliminating the potential for uncontrolled kiln emissions. The SCAQMD's permits (one for each kiln) minimize kiln emissions by requiring that the units only fire natural gas, are not used to process specified carcinogenic air contaminants, and only operate when the afterburners are in full operation. In addition, the performance of the afterburners is monitored continuously by reference to continuous temperature measuring devices. The SCAQMD's issuance of the permits demonstrates that emissions of combustion gases (consisting primarily of carbon dioxide and water vapor resulting from combustion of stearic acid, glycerides, and petroleum wax/oils in the polishing compounds) and any associated health and environmental exposures are within acceptable limits. The operation of the kilns pursuant to the SCAQMD permits ensures that releases to the air that may have adverse effects on human health or the environment are prevented.

Photograph 3: Kilns

Ball Mills: Each ball mill measures 12 inches in diameter by 12 inches in length and is used to reduce the size of the jewelry sweeps to less than 60 mesh size. The typical cycle processes a charge of 30 pounds in 15 minutes.

Each unit is a standard, off-the-shelf ball mill constructed of steel and manufactured by Bico-Braun. The ball mills are partially filled with sweeps and cast iron balls and rotate around a horizontal axis. An internal cascading effect causes the iron balls to grind the sweeps into smaller, more uniform particles. When the milling process is complete, the sweeps are removed into a pan placed beneath the unit. A manufacturer's schematic is shown below and the ball mills at the facility are shown on Photograph 4.

The ball mills operate at room temperature and do not generate emissions subject to air emissions control requirements. All waste and hazardous constituents are contained within the units and inside the room during operation, so there are no pathways for exposures to humans or the environment. Direct exposure to facility personnel from sweeps processed in the ball mills is controlled through use of personal protective equipment (e.g., gloves, aprons, safety glasses).

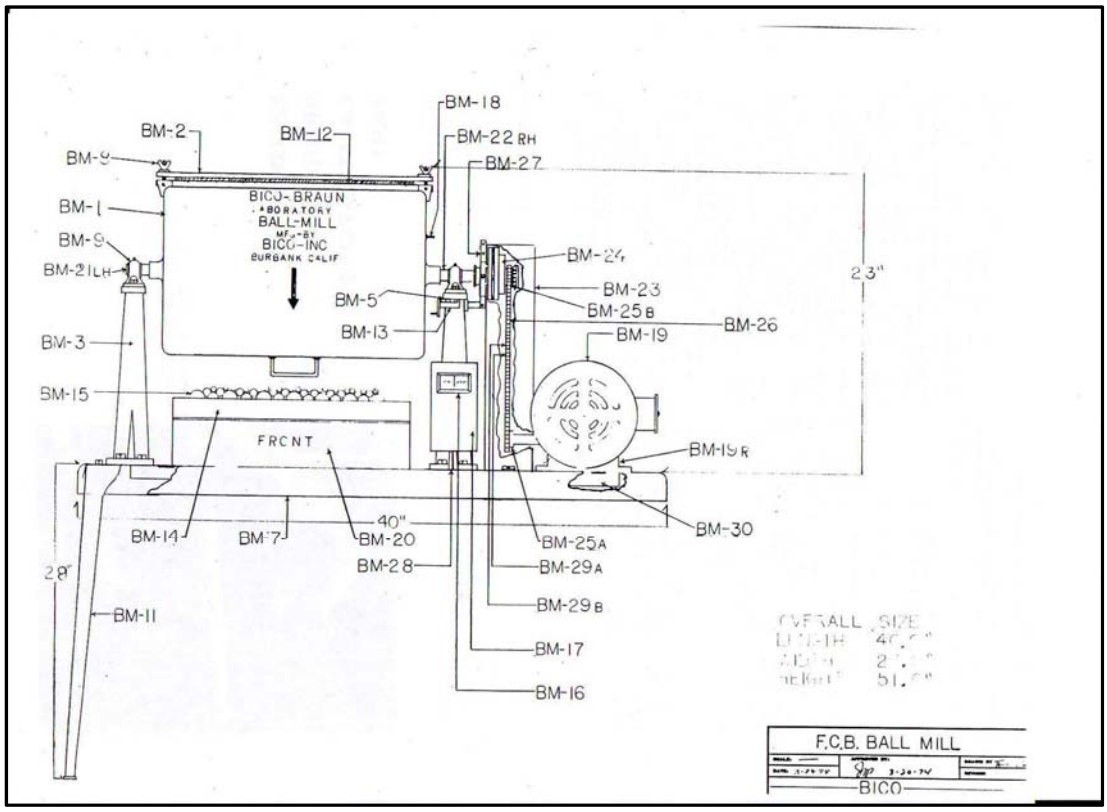

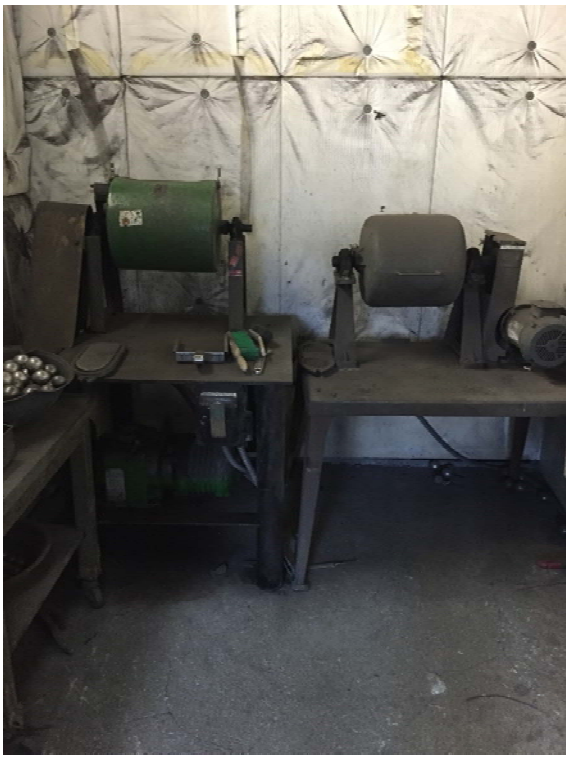

Photograph 4: Ball Mills

Screen Separators: The 18-inch diameter and 24-inch diameter vibratory screen separators are used to separate jewelry sweep particles into less than 60 mesh size. The oversize particles that are greater than 60 mesh size and cannot be further reduced are removed from further processing and transferred to the In-Process Storage Area. The typical cycle is less than 30 minutes. This is a batch process with the typical batch being 50 pounds.

Each screen is a standard off-the-shelf separator constructed of steel and manufactured by SWECO that consists of a vibratory screening device that vibrates about its center of mass. Vibration is accomplished by eccentric weights on the upper and lower ends of the motion-generator shaft. Rotation of the top weight creates vibration in the horizontal plane, which causes material to move across the screen cloth to the periphery. The lower weight acts to tilt the machine, causing vibration in the vertical and tangential planes. The angle of lead given the lower weight with relation to the upper weight provides variable control of the spiral screening pattern. ATLAS does not currently have engineering drawings of the screens because they were purchased by the former owner/operator of the facility. However, a general schematic showing the typical configuration of SWECO screen separators is presented below. The large and small screens at the ATLAS facility are shown on Photographs 5 and 6, respectively.

The vibratory screens operate at room temperature and do not generate emissions subject to air emissions control requirements. All waste and hazardous constituents are contained within the unit and inside the room during operation, so there are no pathways for exposures to humans or the environment. Direct exposure to facility personnel from sweeps processed in the screens is controlled through use of personal protective equipment (e.g., gloves, aprons, safety glasses).

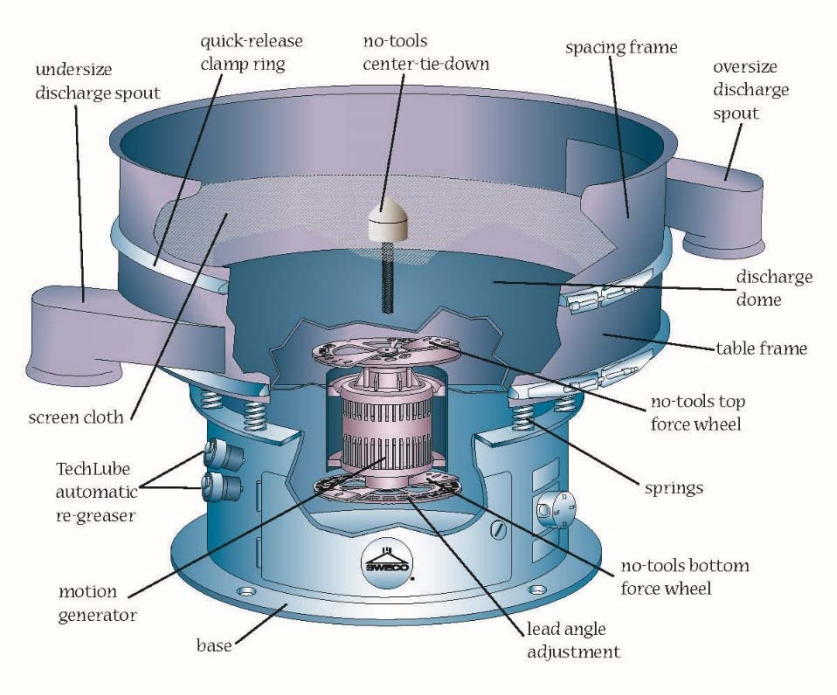

Photograph 5: Large Screen Separator

Photograph 6: Small Screen Separator

Cone Blender: The 30-inch diameter cone blender is used to blend the less than 60 mesh jewelry sweeps to ensure that a representative sample can be taken for determining the precious metal content. The typical blending cycle is one hour. This is a batch process with the typical batch being 50 pounds and a maximum batch size of 400 pounds.

The cone blender is a standard off-the shelf cone blender constructed of steel and manufactured by Sepor. Blending occurs by slowly rotating the blender, where the angle of the bottom cone becomes tilted beyond the angle of repose of the material in the blender. Multiple surface layers then flow towards the empty cone, followed by the remainder of the material, in mass, to the empty cone end. The cone shape pushes a portion of the material towards the center, and upwards, where blending takes place. Rapid blending occurs because of shape of the dual cone, the random travel direction of particles within the blender, and the differing particle velocities as they travel from end to end. ATLAS does not currently have engineering drawings of the cone blender because it was purchased by the former owner/operator of the facility. However, a general schematic showing a typical Sepor cone blender configuration, which is representative of the cone blender at the facility, is shown below. The cone blender at the facility is shown on Photograph 7.

The cone blender operates at room temperature and does not generate emissions subject to air emissions control requirements. All waste and hazardous constituents are contained within the unit and inside the room during operation, so there are no pathways for exposures to humans or the environment. Direct exposure to facility personnel from sweeps processed in the cone blender is controlled through use of personal protective equipment (e.g., gloves, aprons, safety glasses).

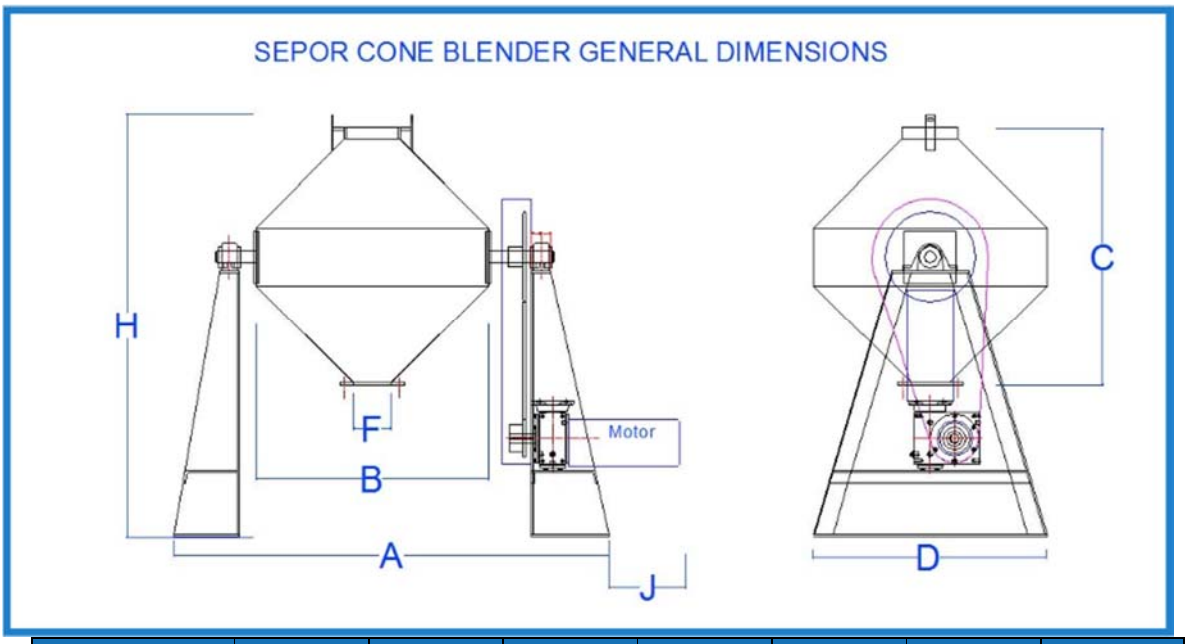

Cone Blender Size	A	B	C	D	F	H	J
30	59	30	1.5	28	6	48	20

Photograph 7: Cone Blender

5.4 SECONDARY CONTAINMENT DESIGN

The treatment equipment contains no free liquids and is situated inside a building with an impermeable floor and hence the equipment is exempt from secondary containment requirements.

5.5 SPECIFIED AIR EMISSIONS CONTROLS

The roasting kilns are equipped with afterburners to combust all organic compounds, as specified in the facility's air permits. The South Coast Air Quality Management District does not require any additional air pollution control equipment.

6. TRAINING PLAN

6.1 TRAINING

All personnel who manage sweeps and associated processing equipment are provided with adequate training to perform their duties safely and in compliance with hazardous waste regulations. All personnel associated with the management of hazardous wastes are required to successfully complete a program of instruction that trains them to perform their duties safely and in compliance with regulatory requirements.

6.2 TRAINING PROGRAM

The training program consists of an introductory training program and an annual refresher training program. The introductory training program is completed by each subject facility employee within the first six months of employment or six months after a change of position. A subject employee is not allowed to work in an unsupervised position until he/she has completed this training. Employees who have not been trained in all courses below are not allowed to enter the Sweeps Storage and Processing Room without supervision and are not allowed to manage hazardous waste.

Introductory and annual training courses include the following:

- In-house training on hazardous waste management procedures in the Sweeps Storage and Processing Room, including:
  - Hazardous waste identification;
  - Storage and inspection of hazardous waste;
  - Operation of processing equipment;
  - Sampling and analysis;
  - Shipment of hazardous wastes;
  - Manifesting; and
  - Record-keeping.
- In-house training on Contingency Plan implementation designed to ensure that facility personnel are able to respond effectively to emergencies and become familiar with emergency equipment and emergency systems, including:
  - Use, inspection, repair, and replacement of facility emergency and monitoring equipment
  - Communications or alarm systems
  - Response to releases, fires, or explosions
  - Shutdown of operations.
- In-house health and safety training that includes discussion of safety and health hazards at the facility, personal protective equipment, other safety practices, and names of on-site safety coordinators and alternates.

- Contractor-provided Hazardous Waste Operations and Emergency Response (HAZWOPER) training (initial 24-hour training and annual 8-hour refresher).

Employees who work in the Sweeps Storage and processing Room receive all training courses, and other employees at the facility who are not directly involved in management of hazardous waste receive only the Contingency Plan training.

With the exception of the HAZWOPER training, which is provided by an outside contractor, all training is provided in-house by the Production Foreman. The Production Foreman will receive training in hazardous waste regulations (one-time course), Department of Transportation (DOT) hazardous materials classification (one-time course), and HAZWOPER (introductory and annual).

6.3 TRAINING RECORDS

Training records consist of attendance records and copies of training materials indicating topics covered for in-house training courses and certificates of completion for training provided for outside contractors.

Personnel training records are kept at the facility and are available for examination by a Department of Toxic Substances (DTSC) representative upon request. The training records for current personnel are kept on file at the facility until the facility closes. The training records of former employees are kept for at least 3 years from their last date of employment at the facility.

Training records include:

- A job title for each position at the facility that is related to hazardous waste management;
- A job description for each of those positions;
- The dates on which employees received their initial training and annual refresher training.

6.4 JOB DESCRIPTIONS

Job descriptions for the employees who work in the Sweeps Storage and Processing Room are presented below.

Job Description

Position / Title: Production Foreman

General Description: Responsible for all operational aspects of the Hazardous Waste Facility (Sweeps Storage and Processing Room)

Requirements: Must be high school graduate or equivalent and have a minimum experience of four (4) years in precious metal operations.

Duties / Responsibilities: Responsible for the operation of the Hazardous Waste Facility, including the following:

- Conducting customer waste acceptance evaluations
- Receiving and inspecting incoming hazardous waste shipments and customer certifications
- Processing hazardous waste in onsite equipment
- Conducting sampling of processed materials for assay
- Conducting inspections of hazardous waste storage areas
- Preparing and signing hazardous waste manifests
- Providing training to site personnel
- Maintaining all records required by the Standardized Hazardous Waste Permit and by Cal/OSHA

Training Requirements	Frequency
HAZWOPER	24 hours initially, 8 hour refresher annually
Hazardous Waste Management Procedures*	Annually
Contingency Plan*	Annually
Health & Safety Procedures*	Annually
Hazardous waste regulations	One time
DOT hazardous materials classification	One time

*Training course is led by Production Foreman

Job Description

Position / Title: Furnace Operator

General Description: Responsible for operation of furnace kilns, ball mills, separators, and blender

Requirements: Must be high school graduate or equivalent and have a minimum experience of two (2) years in precious metal operations.

Duties / Responsibilities: Responsible for the following operations in the Hazardous Waste Facility:

- Conducting customer waste acceptance evaluations
- Receiving and inspecting incoming hazardous waste shipments and customer certifications
- Processing hazardous waste in onsite equipment
- Conducting sampling of processed materials for assay
- Conducting inspections of hazardous waste storage areas
- Preparing hazardous waste manifests for signature by the Production Foreman

Training Requirements	Frequency
HAZWOPER	24 hours initially, 8 hour refresher annually
Hazardous Waste Management Procedures	Annually
Contingency Plan	Annually
Health & Safety Procedures	Annually

7. SECURITY

Security features at the facility include the following:

- A locked entry into the facility
- An alarm system
- Bulletproof windows at the office areas that face the Sweeps Storage and Processing Room
- Security cameras within the office and Sweeps Storage and Processing Room
- A locked entry with keypad entry into the Sweeps Storage and Processing Room

The door to the entrance of the Sweeps Storage and Processing Room is posted with a sign stating "Danger - Hazardous Waste Area - Unauthorized Personnel Keep Out".

8. INSPECTION PLAN

8.1 INSPECTION PLAN

This Inspection Plan specifies a schedule and method of inspection of various equipment, structural, and operational features of the facility. Regularly scheduled inspections can help to identify and correct situations that could lead to sudden or non-sudden occurrences that may threaten human health or the environment.

The facility is inspected for malfunctions and deteriorations, operator errors, and releases which may cause or lead to the release of hazardous waste constituents to the environment or threaten human health. When deficiencies are identified, steps are taken immediately to correct the situation, and equipment determined during an inspection to be in a state of malfunction, deterioration, or disrepair will be removed from service until it is in good repair to ensure that the problem does not lead to an environmental or human health hazard.

The facility conducts inspections in accordance with the inspections schedule below.

Table 6: Inspection Schedule

Description	Items Inspected	Frequency	Actions/Records
General facility	Signs, security	Daily	Deficiencies corrected immediatedly and noted in Maintenance Log
Container Storage Areas	Container condition, spills, labels, quantity/capacity, aisle space	Weekly	Weekly Inspection Form
Process Equipment	Equipment function, leaks, monitoring data (temperature)	At least once per 8-hour shift	Personnel observation during operations; routine observations not recorded but deviations noted in Maintenance Log
Health and Safety Equipment	Personal protective equipment and clothing	Weekly	Weekly Inspection Form
Emergency Equipment			
Eye Washes	Function	Weekly	Weekly Inspection Form
Fire Extinguishers	Function	Monthly	Inspection date recorded on tags affixed to fire extinguishers
Fire alarms	Function	Monthly	Monthly Inspection Form
Spill Kits	Contents	Monthly	Monthly Inspection Form
First Aid Kits	Contents	Monthly	Monthly Inspection Form

All findings requiring corrective action are recorded in an inspection log. Inspection logs are maintained in the operating records for at least three years from the date of inspection. Records

include date, time, inspector's name, observations, repairs required, and repairs performed. A facility inspection form used for weekly inspection of container storage areas is presented below.

Weekly Inspection Form

Inspector: _____

Container Inspections					
Item	Description	In-Process Area		Shipping Area	
		Yes	No	Yes	No
1	All containers free of leaks, corrosion, deterioration, or bulging				
2	Containers stacked no more than two high in stable format.				
3	Minimum 30-inch aisle spaces are maintained. - Containers are positioned within the lines without leaning at an angle from the vertical axis. - Container labels are facing aisles				
4	All containers are closed and labeled				
5	No waste residue on floor				
6	Waste quantity does not exceed the permitted capacity (1,500 pounds)				

Equipment Inspections			
Item	Description	Yes	No
7	Personal protective equipment available		
8	Eye washes dfunctional		

Note: All "No" answers must be accompanied by a description of the issue and corrective action below.

Identified issue(s) and corrective action(s):

Signature:_____Date:_____Time:_____

Monthly Inspection Form

Instructions: For each inspection item, use a check mark (✓) under each inspection item to indicate the following:

- Fire alarms are functional
- Spill kits are stocked
- First aid kits are stocked

Where deficiencies are noted, indicate "No", describe the deficiency and update the form when the deficiency is corrected.

Equipment Inspections							
Date	**Time**	**Inspector**	**Fire Alarms**	**Spill Kits**	**First Aid Kits**	**Deficiencies**	**Corrective Action Date**

Maintenance Log

Instructions: For any processing equipment or security equipment requiring maintenance, describe the type of maintenance required and enter the corrective action date when the maintenance has been completed.

Maintenance Activities				
Date	**Time**	**Employee**	**Description of Maintenance Required**	**Corrective Action Date**

9. CONTINGENCY PLAN

9.1 INTRODUCTION

This hazardous waste contingency plan for Atlas Precious Metals, Inc. (ATLAS) establish procedures to minimize hazards to human health or the environment resulting from fires, explosions, or any unplanned sudden or non-sudden release of hazardous waste to the environment (i.e., outside the facility). The plan is to be implemented immediately whenever there is a fire, explosion, or release of hazardous waste to the environment. This plan has been prepared in accordance with the requirements for a contingency plan described in Section 66264.50 – 66264.56 of Title 22 of the California Code of Regulations (22 CCR 66264.50 - 66264.56)

This plan will be reviewed and immediately amended and an appropriate permit modification request will be submitted to DTSC whenever any of the following occurs:

- The applicable regulations are revised (i.e., 22 CCR 66264.50 - 66264.56), to the extent the revisions affect the plan;
- The plan fails in an emergency;
- The facility changes in its design, construction, operation, maintenance, or other circumstances in a way that materially increases the potential for fires, explosions, or releases of hazardous waste or changes the response necessary in an emergency;
- The list of emergency coordinators changes; or
- The list of emergency equipment changes.

The Production Foreman maintains a copy of this plan, and the plan is available to all employees. In addition, copies of this plan have been submitted to outside agencies who may be called upon to provide emergency services in the event of a hazardous waste release, as described in this plan.

9.2 FACILITY DESCRIPTION

Atlas Precious Metals, Inc.
640 South Hill Street, Suite 743
Los Angeles, California 90014
(213) 622-9995

Hazardous wastes managed at the facility consist of jewelry polishing/sweeps (sweeps). Sweeps consist of dry materials, and any spills of sweeps would be contained on the floor of the facility. There is no effluent associated with processing of material at the facility. The only danger associated with facility operations, other than cleanup associated with spills of dry material, would be the result of a natural gas leak, fire, or explosion.

9.3 EMERGENCY RESPONSE ORGANIZATION

9.3.1 Emergency Coordinators

It is ATLAS' policy that, at all times, there is at least one employee on-site, or on call, available to respond to and coordinate emergency response activities. This person will be designated as the Emergency Coordinator.

The Emergency Coordinator is familiar with this hazardous waste contingency plan; all operations and activities at the facility; the location and characteristics of the wastes generated on-site; the facility layout; and the location of facility records. The Emergency Coordinator will be responsible for characterizing a release, for initiating communications within the facility, for conducting notifications outside of the facility, for coordinating emergency services and medical services, and for overseeing the proper remediation of the release. In addition, this individual will have the authority to commit resources to see that the contingency plan is appropriately carried out.

ATLAS has designated the following as the primary and alternate Emergency Coordinators:

Primary Emergency Coordinator:	John Ozonian Production Foreman (310) 489-3178 (mobile) 8145 Newcastle Drive Whittier, California 90605
Alternate Emergency Coordinator:	Ani Samuelian Vice President (818) 414-5454 10345 Woodbridge St Toluca Lake, California 91602

9.3.2 Emergency Response Personnel

Emergency response personnel at the facility include the Production Foreman and the Furnace Operator, both of whom have received Hazardous Waste Operations and Emergency Response (HAZWOPER) training. Emergency response personnel will respond to releases of hazardous waste at the facility and small fires that can be readily addressed with a portable fire extinguishers. For larger fires, facility personnel will request assistance from the Los Angeles Fire Department.

9.4 EMERGENCY RESPONSE SYSTEMS

9.4.1 Emergency Equipment

Emergency equipment and supplies at the ATLAS facility consist of the following:

- Portable type ABC dry chemical fire extinguishers;
- A manual fire alarm;
- First aid kits
- Eye wash station;
- Spill cleanup kits, which include brooms, dustpans, empty containers, gloves, and safety goggles; and
- Automatic sprinklers located throughout the building, including 12 in the Sweeps Storage and Processing Room.

The locations of the fire extinguishers, first aid kits, eye wash station, and spill cleanup kits are indicated on Figure 6.

9.4.2 Alarm Systems

A manual fire alarm is located in the hallway adjacent to the exit stairway (see Figure 6).

9.4.3 Communication Systems

Communications systems that can be used in the event of an emergency at the ATLAS facility consist of telephones and an intercom system located throughout the facility, including in the Sweeps Storage and Processing Room, and mobile phones carried by all personnel.

9.5 EMERGENCY PROCEDURES

In the event of a fire, explosion, or release of hazardous waste from the facility, the employee who identifies the situation will notify the Emergency Coordinator. To the extent possible, the Emergency Coordinator will assess the source, magnitude, and areal impact of the fire, explosion, or release, using visual observations, facility records, and/or employee knowledge. The Emergency Coordinator will also evaluate the potential for the release to adversely impact human health and the environment. In doing so, the Emergency Coordinator will consider not only direct impacts, such as flames, but also indirect impacts, such as water runoff generated as a result of fire extinguishing equipment or irritating gases generated as a result of fires.

The Emergency Coordinator will assess whether evacuation is necessary for the entire facility, the building, or only for areas within the vicinity of the fire, explosion, or release. The Emergency Coordinator will then use appropriate internal communication systems to notify ATLAS employees of the need to evacuate. The Emergency Coordinator will contact emergency response agencies, as described below, and the building manager.

If the explosion, fire, or release can be addressed safely by trained employees, the Emergency Coordinator will assign one or more employees to extinguish flames using onsite fire extinguisher or clean up the release. Hazardous materials releases will be cleaned up using materials in the spill kits, as needed, and/or other materials used as part of standard operations. Any waste materials generated during cleanup of a spill will be placed in closed containers and appropriately labeled as hazardous waste or, as applicable, returned to the operational cycle.

The Emergency Coordinator will direct actions to prevent fire or additional releases of hazardous waste from occurring or spreading, if such actions can be done safely. These actions might include: use of fire extinguishers, stopping processes and operations, or uprighting fallen containers. If operations cease during the fire or release, the Emergency Coordinator will also monitor for leaks or ruptures in equipment, wherever this is appropriate.

9.6.1 Verbal Notifications

In the event of a release, fire, or other event that is determined by the Emergency Coordinator to adversely affect human health or the environment, the Emergency Coordinator will immediately orally notify the following agencies:

Agency	Phone
Los Angeles Fire Department	911
Los Angeles County Fire Department Health Hazardous Materials Division	(323) 881-2411
State Office of Emergency Services (OES)	(800) 852-7550

The Emergency Coordinator will report the following information:

- Name and telephone number;
- Name and address of the ATLAS facility;
- Time and type of incident (e.g., release, fire);
- Name and quantity of material(s) involved;
- Extent of injuries, if any; and
- Possible hazards to human health, or the environment.
- The Emergency Coordinator will also contact the Building Management office at (213) 629-2124.

The Los Angeles Fire Department will notify nearby businesses and facilities as warranted by the emergency situation.

Any ATLAS personnel injured during the emergency will be taken to the following medical facility for treatment unless the emergency situation dictates that another hospital or medical facility be used:

Good Samaritan Hospital
1225 Wilshire Blvd
Los Angeles, CA 90017

Subsequently, the facility will orally notify the DTSC and the appropriate local and state authorities once the released material and any contaminated debris have been appropriately disposed of and all equipment used in the emergency response is cleaned.

9.6.2 Written Notification

Within 15 days of a release reported orally to the agencies listed above, ATLAS will submit a written report on the incident to DTSC. The report will include the following:

- Name, address, and telephone number of the ATLAS facility;
- Date, time and type of incident (e.g., release, fire);
- Name and quantity of material(s) involved;
- Extent of injuries, if any;
- An assessment of actual or potential hazards to human health or the environment, where this is applicable; and
- Estimated quantity and disposition of recovered material that resulted from the incident.

9.7 DISPOSAL OF RELEASED MATERIAL

After a fire, explosion, or release event, the Emergency Coordinator is responsible for seeing that the released material and any contaminated debris, water, or other material that results from a release or fire is handled appropriately. All waste materials generated during cleanup of the release and any potentially hazardous residues from fire extinguishing will be managed as a hazardous waste. In addition, the Emergency Coordinator will assure that waste materials are segregated based on their compatibility and that no incompatible materials will be stored, treated, or disposed of with the released waste.

9.8 EVACUATION PROCEDURES

In the event that the Emergency Coordinator determines that partial or complete evacuation of the facility is necessary, the Emergency Coordinator will notify ATLAS personnel via the intercom paging system or cell phone. ATLAS employees will evacuate the facility using the evacuation routes indicated on Figure 6 and evacuated personnel will assemble in the waiting room near the facility entrance, as indicated on Figure 6.

Following evacuation, the Emergency Coordinator will confirm that all employees have evacuated the facility by taking roll call using the security list of employees in the facility. The Emergency Coordinator will also check the daily visitor roster from the front lobby to confirm that all visitors have evacuated the facility.

Evacuated employees will not re-enter the facility until the Emergency Coordinator has confirmed that the emergency has been addressed and it is safe to re-enter.

9.9 ARRANGEMENTS WITH LOCAL AUTHORITIES

ATLAS will provide the following organizations with a copy of this contingency plan: the Los Angeles Police Department, the Los Angeles Fire Department, OES, the Los Angeles County Fire Department Health Hazardous Materials Division (which serves as the Certified Unified Program Agency, or CUPA), and Good Samaritan Hospital. In addition, ATLAS will make arrangements to familiarize these organizations with the layout of the facility and places where employees are located, the properties of the hazardous wastes handled at the facility, the types of injuries and illnesses which could result from fires or releases, and the possible evacuation routes.

10. CLOSURE PLAN

10.1 INTRODUCTION

ATLAS processes jewelry polishing/sweeps (sweeps) to determine the precious metal content of the sweeps. The facility occupies a suite on the seventh floor of the St. Vincent Jewelry Center Building. Production equipment includes two kilns, two ball mills, two vibratory screens, and one cone blender. Sweeps are stored in 5, 10, 15, 35, and 55 gallon containers and the maximum quantity in process is 1,500 pounds.

Closure of the facility will be accomplished by cleaning all equipment and surfaces in the hazardous waste processing areas of the facility.

10.2 CLOSURE PERFORMANCE STANDARD

The facility will be "clean closed." The hazardous constituents present in the materials processed at the facility consist of metals. Because metals are naturally-occurring materials that are present in dirt, dust, tap water, or other materials in the facility, the closure performance standard will be background concentrations of metals, as represented by concentrations of metals in rinse waters collected following cleaning. In the event that it is not feasible to achieve background concentrations, ATLAS will submit a human health risk assessment to DTSC with a proposed approach to demonstrate that metals on facility surfaces do not pose a substantial present or potential threat to human health or the environment.

Because all activities described in this application are integral to the sweeps processing operation, there are no scenarios for which the facility would perform partial closure. This closure plan thus addresses final closure only.

10.3 MAXIMUM INVENTORY ESTIMATES

This maximum hazardous waste inventory that will be at the facility at any one time over the active life of the facility is presented on Table 7. This represents the maximum quantity that may be present in storage areas and in treatment equipment.

In addition to hazardous wastes that are stored and processed at the facility, waste will be generated during closure activities. Specifically, closure-generated wastes will consist of bags of dust generated during vacuuming of equipment and storage areas, which will be managed by recycling because of the precious metals content, washwater from cleaning equipment and room surfaces, and disposable closure equipment and supplies (i.e., rags, personal protective equipment [PPE], sampling equipment). Quantities of these residuals are estimated on Table 7.

Table 7: Maximum Inventory Estimates		
Unit	**Maximum Active Life Inventory (pounds)**	**Maximum Inventory at Closure (pounds)**
In-Process Storage Area	1,500	1,500
Shipping Area	1,500	1,500
Kiln #1	50	50
Kiln #2	50	50
Ball Mill #1	30	30
Ball Mill #2	30	30
Large Screen Separator	50	50
Small Screen Separator	30	30
Cone Blender	400	400
Wastes generated during closure:		
Wastewater from equipment decontamination[1]	--	984
Wastewater from flooring decontamination	--	1,066
Dust from vacuuming equipment and flooring	--	100
Disposal equipment and supplies[2]		500
TOTAL	**3,640**	**6,290**

Notes:
[1] Based on 120 gallons of washwater from equipment decontamination and 130 gallons from flooring decontamination (see Table 9 for details) and assumes 8.2 pounds/gallon.
[2] Based on 100 pounds from vacuuming storage and processing areas and 1 drum (500 pounds) of cleaning debris.

10.4 WASTE REMOVAL / TREATMENT

The hazardous wastes processed at the facility have high value because of the precious metals content. During normal operations, wastes are typically processed within one week and are removed from the facility for shipment to a precious metal recovery facility within approximately one week of processing. At closure, all wastes in inventory (if any) will be processed through normal operations and subsequently shipped to a precious metals recovery facility. Similarly, the dust collected during vacuuming of processing equipment and storage areas will be shipped to a precious metals recovery facility. Therefore, the only closure waste that will require management by disposal will consist of miscellaneous decontamination debris and residuals (i.e., rags, PPE, disposal sampling equipment, pressure washwater). These wastes will be containerized in 55-gallon drums. The washwater (five drums) will be shipped to a hazardous waste treatment facility approximately 25 miles away from the ATLAS facility and the solid debris waste (one drum) will be shipped to an off-site hazardous waste disposal facility located approximately 180 miles away from the ATLAS facility.

10.5 DECONTAMINATION PROCEDURE

Equipment that will require closure includes two kilns, two ball mills, two vibratory screens, one cone blender, and associated hoods, ducting, and kiln trays. This equipment will be cleaned by vacuuming residual metals dust, followed by high pressure washing. The equipment will be left in place after closure as a hazardous waste storage and treatment facility and will be retained for potential use in other aspects of ATLAS' jewelry operations. Although the equipment may eventually be sold by the facility for reuse by another facility or for scrap metal value, such sale would occur following completion of closure activities and DTSC's approval of the closure report, and hence is outside the

scope of this Closure Plan. Nonetheless, the closure cost estimate is based on offsite disposal of the equipment following cleaning in order to provide the most conservative estimate.

The walls and floors of the processing and storage areas will be decontaminated by vacuuming and multiple rounds of high pressure washing. Washwater will be contained during washing by closing doors of areas being washed and using absorbent pads, as needed, and the washwater will subsequently be collected with a portable wet vacuum and discharged into drums. There are no floor drains in the waste storage and processing areas.

10.6 CONFIRMATION SAMPLING PLAN FOR STRUCTURES, EQUIPMENT, AND BUILDINGS

Processing and storage areas will be inspected following cleaning to qualitatively assess the effectiveness of decontamination procedures. Rinse water from the second and third rounds of pressure washing will be sampled to assess residual metals concentrations. A sample of the facility's tap water will also be collected and analyzed for metals and the resulting concentrations will represent background concentrations. The rinse water sample will be compared to background concentrations and an additional round of pressure washing will be conducted if rinse water concentrations exceed background concentrations. In the event that it is not feasible to achieve background concentrations, ATLAS will submit a human health risk assessment to DTSC with a proposed approach to demonstrating the metals remaining on surfaces do not pose a substantial present or potential threat to human health or the environment.

The rinse water samples will be analyzed for all metals that have been confirmed to be present in the sweeps (see Section 3.2.5) using the detection limits summarized on Table 8.

Table 8: Detection Limits for Confirmation Samples

Method	Matrix	Analyte	MDL	PQL	Units
EPA-6020	Water	Arsenic	0.38	2	ug/L
EPA-6020	Water	Barium	0.066	1	ug/L
EPA-6020	Water	Beryllium	0.05	1	ug/L
EPA-6020	Water	Cadmium	0.034	1	ug/L
EPA-6020	Water	Chromium	0.15	3	ug/L
EPA-6020	Water	Cobalt	0.011	1	ug/L
EPA-6020	Water	Copper	0.32	2	ug/L
EPA-6020	Water	Lead	0.021	1	ug/L
EPA-6020	Water	Molybdenum	0.033	1	ug/L
EPA-6020	Water	Nickel	0.15	2	ug/L
EPA-6020	Water	Silver	0.015	1	ug/L
EPA-6020	Water	Vanadium	0.39	3	ug/L
EPA-6020	Water	Zinc	2.2	5	ug/L
EPA-7471	Water	Mercury	0.03	0.2	ug/L

MDL = Method Detection Limit
PQL = Practical Quantitition Limit
ug/L = micrograms per liter

10.7 CONFIRMATION SOIL SAMPLING PLAN

The facility is located on the seventh floor of a building and operations do not involve any liquid materials. Consequently, there is no potential for soil contamination and no soil sampling is warranted.

10.8 ANALYTICAL TEST METHODS

Rinse water samples will be submitted to a California certified analytical laboratory for analysis of metals concentrations using EPA Method 6020 or 7471, as indicated on Table 8. The concentrations of metals in the rinse water samples will be compared to the background concentrations of metals in the facility's tap water to verify effectiveness of cleaning procedures. If concentrations in rinse water are higher than background concentrations, decontamination procedures will be repeated.

10.9 CLOSURE COST ESTIMATE

The estimated cost to close the facility is presented on Table 9. The closure cost estimate is based on the cost of hiring an independent third party to close the facility.

As specified in DTSC's guidance for estimating closure costs, the closure cost estimate does not incorporate any salvage value that may be recouped with sale of wastes, structures, equipment, and other assets. In reality, the waste processed at the facility is comprised of valuable precious metals (i.e., gold, platinum, and silver) which would not be managed by disposal under any reasonably foreseeable scenario.

The closure cost estimate will be updated annually for inflation and when any of the following occur:

- Changes in the facility's operation;
- An increase in the amount of hazardous waste managed; or
- Any remediation that may be required at the time of closure.

Table 9: Estimated Closure Cost					
Description	**Units**	**Quantity**	**Unit Cost**	**Subtotal Cost**	**Notes**
A. Transportation and Disposal of Waste Inventory					
Waste (sweeps) in containers	pounds	3640	$0.25	$910	Assumes offsite treatment as hazardous waste. Disposal rate is arbitrary because of approximate precious metals recovery value of $1.9 million, based on value indicated in Exhibit 5.
B. Decontamination					
Vacuum of floors, walls, and equipment	hours	7	$75	$525	Assumes 650 ft^2 floor, 480 ft^2 walls (4 ft high around entire room), 200 ft^2 of equipment surfaces. Assumes 0.005 hr/ft^2 based on 2016 RSMeans for HEPA vacuuming (line number 028213420100). Unit hourly rate based on General Environmental Laborer.
Pressure wash of floors, walls, and equipment	hours	40	$75	$3,000	Assumes triple washing of 650 ft^2 floor, 480 ft^2 walls, and 200 ft^2 equipment at a rate of 0.011 hr/ft^2 based on 2016 RSMeans for steam cleaning masonry (line number 040130202000). Unit hourly rate based on General Environmental Laborer.
C. Dismantling, Transportation, and Disposal of Processing Equipment					
Equipment dismantling	hours	8	$75	$600	Unit hourly rate based on General Environmental Laborer
Transportation and disposal of equipment	cubic yards	3	$78	$234	Assumes transportation to LA County Sanitation District Scholl Canyon solid waste landfill in Glendale, tipping fees OF $58.24/ton for hard-to-handle bulky items, $20/ton for transportation, transportation distance of 12 miles, and density of 1 ton/yd^3.
D. Transportation and Disposal of Cleaning Residuals					
Transportation and disposal of solid cleaning debris (dust from vacuuming and disposable cleaning equipment)	drum	1	$290	$290	Assumes disposal as hazardous waste. Combined rate for pickup and disposal of drum from 2016 RSMeans (line item 28120101100). Nearest hazardous waste landfill is within 180 miles.

Table 9: Estimated Closure Cost					
Description	**Units**	**Quantity**	**Unit Cost**	**Subtotal Cost**	**Notes**
Transportation and disposal of washwater - first rinse	gallons	800	$2.20	$1,760	Assumes 2 gpm washwater generated with pressure washer running 50% of labor hours (remaining time is for setup, water management, and cleanup). Assumes offsite treatment as hazardous waste. Unit cost reflects vendor combined rate for transportation (25 miles) and disposal as hazardous waste.
Transportation and disposal of washwater - second and third rinses	gallons	1600	$0.18	$289	Assumes volume of water is same as first rinse. Assumes offsite disposal as nonhazardous waste. Unit cost reflects vendor combined rate for transportation (20 miles) and treatment based on lump sum pricing of $289 for up to 2,000 gallons (based on actual disposal pickup and disposal cost for similar waste generated during environmental cleaning under USEPA oversight at Santa Monica Municipal School District).
E. Post-Decontamination Sampling					
Labor for sampling washwater	hour	1	$150	$150	
Analysis of rinsewater samples for total metals	sample	4	$115	$460	Includes samples of first and second rinses, 1 sample of unused water and 1 QA/QC sample, all analyzed for CAM 17 metals.
SUBTOTAL				**$8,218**	
PE Certification (10 percent)				$1,000	Rounded to nearest $1,000.
Contingency (20 percent)				$1,644	
TOTAL				**$10,862**	

10.10 CLOSURE SCHEDULE

ATLAS shall notify DTSC its intent of closure at least 90 days prior to the beginning of the closure plan implementation. All wastes will be removed and structures/equipment decontaminated within 90 days of the date that the facility stops receiving hazardous waste or the closure plan was approved, whichever is later. All closure activities will be completed within 180 days of the date that the facility stopped receiving hazardous waste or the closure plan was approved whichever is later.

10.11 CLOSURE HEALTH AND SAFETY PLAN

At the time of closure, a health and safety plan will be prepared by ATLAS or its closure contractor to provide protection to personnel during the closure activities. The plan will be reviewed and approved by a certified industrial hygienist.

10.12 CLOSURE CERTIFICATION

After all closure activities have been completed, a closure certification will be submitted to DTSC by registered mail within 60 days of completion.

11. CERTIFICATIONS

The following certifications are provided in accordance with DTSC's instructions for the Standardized Permit application:

- Security
- Location, Seismic and Precipitation Information
- Manifest System, Record Keeping, and Reporting
- Preparedness and Prevention

11.1 SECURITY

I hereby certify the following:

- I have read and understood Sections 66264.14, and 66270.14(b)(4), Title 22 of the California Code of Regulations (Security).
- The security procedures and equipment for my facility will be in compliance with these regulations.
- I understand that this certification is an integral part of the formal application for a Standardized Permit for my facility and that any falsification is equivalent to a false statement under Health and Safety Code Section 25191 and may be grounds for a permit denial.

Signature

Joe Samuelian

Printed Name

9/14/16

Date

Atlas Precious Metals, Inc.
640 South Hill Street, Suite 743
Los Angeles, California 90014

11.2 FACILITY LOCATION, SEISMIC AND PRECIPITATION INFORMATION

I hereby certify the following:

- I have read and understood Sections 66264.25 and 66270.14(b)(11), Title 22, of the California Code of Regulations on Facility location, Seismic and Precipitation Information.
- I certify that the nearest fault to my facility is Santa Monica Fault and is six miles away from my facility.
- I certify that my facility is not in the 100-year flood plain; otherwise I will provide the information required under section 66270.14 (b)(11)(D).
- I understand that this certification is an integral part of the formal application for a Standardized Permit for my facility and that any falsification is equivalent to a false statement under Health and Safety Code Section 25191 and may be grounds for a permit denial.

Signature

Joe Samuelian

Printed Name

9/14/16

Date

Atlas Precious Metals, Inc.
640 South Hill Street, Suite 743
Los Angeles, California 90014

11.3 MANIFEST SYSTEM, RECORD KEEPING AND REPORTING

I hereby certify the following:

- I have read and understood sections 66264.70 through 66264.78, Title 22, of the California Code of Regulations on Manifest System, Record Keeping and Reporting requirements. I will have or prepare, for my facility, the required records and reports to be in compliance with all applicable regulations.

- I certify that a copy of the required records or reports will be maintained at my facility and will be available to local, state or federal agencies upon request. I understand that this certification is an integral part of the formal application for a standardized permit for my facility. And that any falsification is equivalent to a false statement under Health and Safety Code section 25191 and may be grounds for a permit denial.

- My facility is (or is not) an offsite facility. I have sent a notice to generators that may use my facility's services and I have the appropriate permit(s) (section 66264.12(b)). A copy of my notice is kept in my facility.

Joe Samuelian

Signature

Joe Samuelian

Printed Name

9/14/16

Date

Atlas Precious Metals, Inc.
640 South Hill Street, Suite 743
Los Angeles, California 90014

11.4 PREPAREDNESS AND PREVENTION

I hereby certify the following:

- I have read and understood Sections 66264.30 through 66264.35, 66264.37, and 66270.14(b)(8) and (b)(9), Title 22 of the California Code of Regulations (Preparedness and Prevention).
- The procedures and equipment for my facility will be in compliance with these regulations. My facility will be designed, constructed, maintained and operated to minimize the possibility of a fire, explosion, or any unplanned sudden or non-sudden release of hazardous waste or hazardous waste constitutes to air, soil, or surface water which could threaten human health or the environment.
- I understand that this certification is an integral part of the formal application for a Standardized Permit for my facility and that any falsification is equivalent to a false statement under Health and Safety Code Section 25191 and may be grounds for a permit denial.

Signature

Joe Samuelian

Printed Name

9/14/16

Date

Atlas Precious Metals, Inc.
640 South Hill Street, Suite 743
Los Angeles, California 90014

12. FINANCIAL RESPONSIBILITY

A trust agreement/standby trust agreement for the full amount of the estimated closure cost is presented in Exhibit 6.

FIGURES

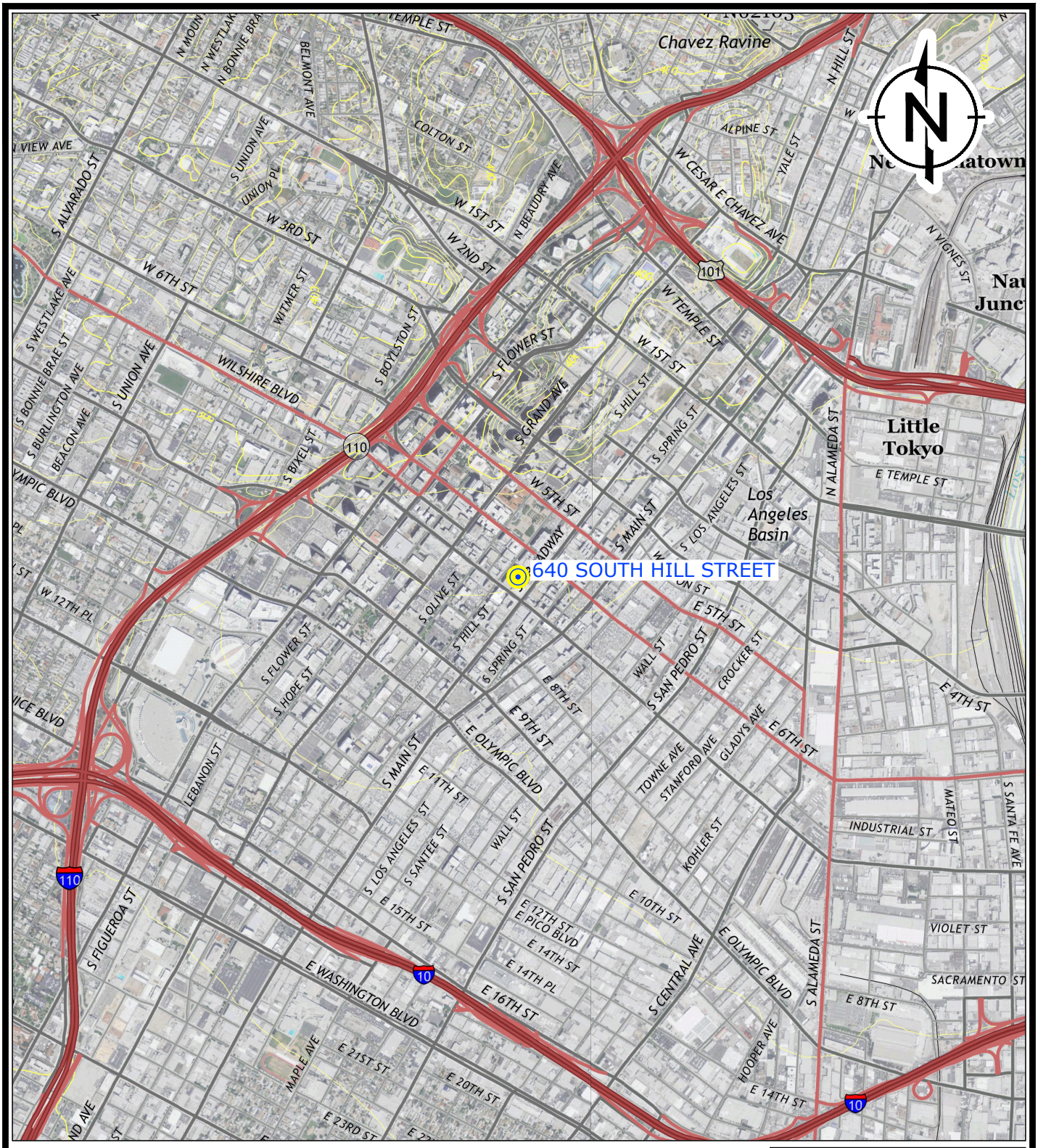

0 1/2 1

SCALE IN MILES

2000 0 2000 4000

SCALE IN FEET

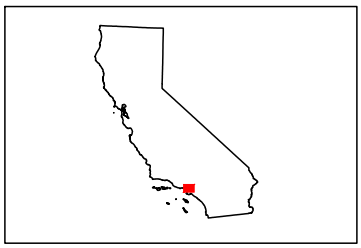

QUADRANGLE KEY MAP

NOTES:
CONTOUR INTERVAL 20 FEET

SOURCE:
USGS 2013 7.5 MINUTE SERIES HOLLYWOOD AND LOS ANGELES, CA TOPOGRAPHIC QUADRANGLES.
MAP SCALE: 1:24,000. SITE LOCATION: N: 34.04601° W: 118.253481° WGS84.

RAMBOLL ENVIRON

DRAFTED BY: KPM | DATE: 1/25/2016

SITE LOCATION MAP

ATLAS PRECIOUS METALS, INC.
640 SOUTH HILL STREET
LOS ANGELES, CALIFORNIA

FIGURE
1

PROJECT: 0838578A

KMAUGHAN 1/27/16 F:\0838578_G&M\PERMIT RENEWAL < SITE LOCATION_0838578 >

KMAUGHAN 1/27/16 F:\0838578_G&M\PERMIT RENEWAL < TAXASSESSORMAP_0838578 >

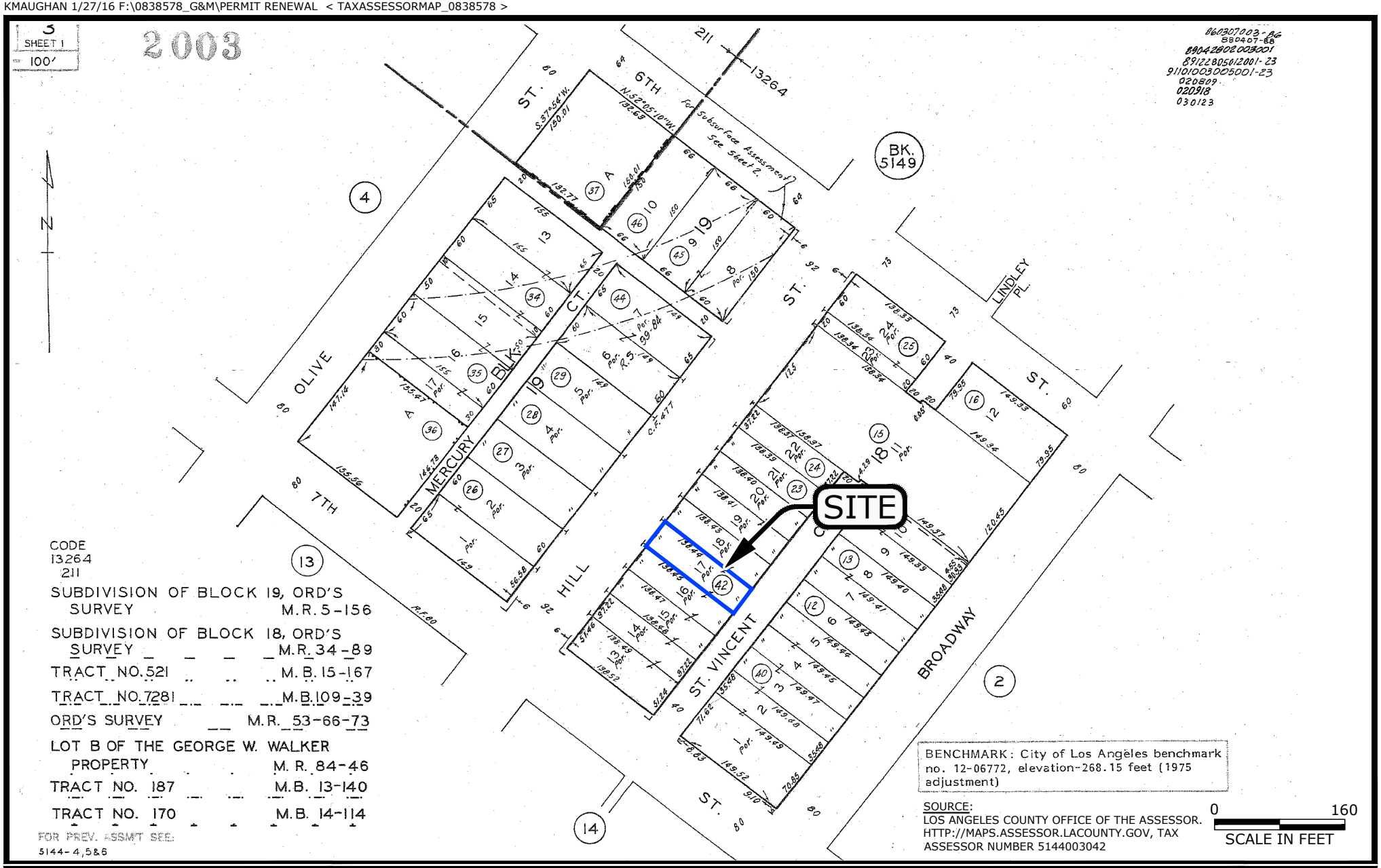

RAMBOLL ENVIRON

DRAFTED BY: KPM

DATE: 01/26/2016

TAX ASSESSOR MAP

ATLAS PRECIOUS METALS, INC.
640 SOUTH HILL STREET
LOS ANGELES, CALIFORNIA

FIGURE
2

PROJECT: 0838578A

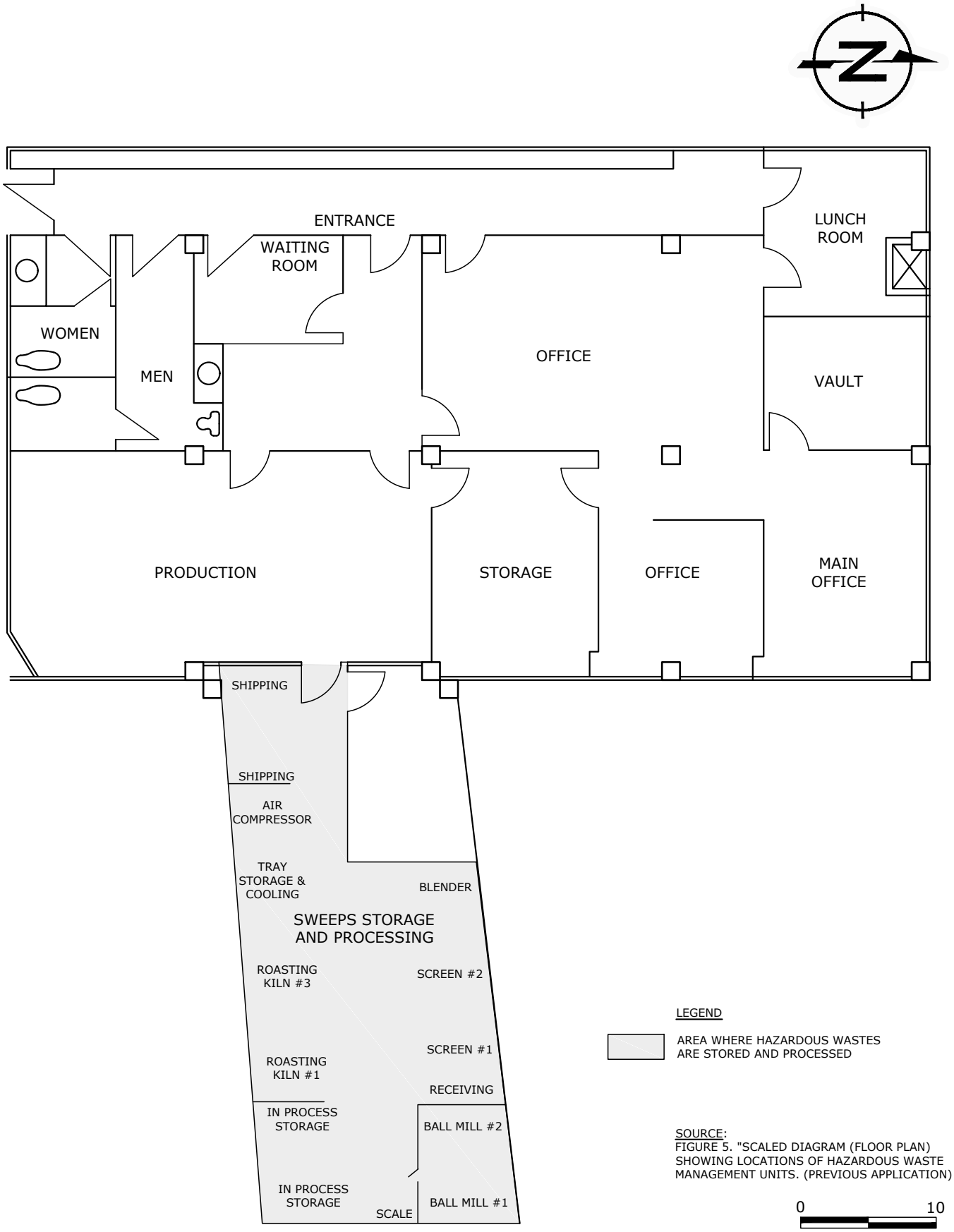

LEGEND

AREA WHERE HAZARDOUS WASTES ARE STORED AND PROCESSED

SOURCE:
FIGURE 5. "SCALED DIAGRAM (FLOOR PLAN) SHOWING LOCATIONS OF HAZARDOUS WASTE MANAGEMENT UNITS. (PREVIOUS APPLICATION)

0 10
SCALE IN FEET (APPROXIMATE)

RAMBOLL ENVIRON

DRAFTED BY: KPM | DATE: 1/28/2016

FACILITY FLOOR PLAN

ATLAS PRECIOUS METALS, INC.
640 SOUTH HILL STREET
LOS ANGELES, CALIFORNIA

FIGURE 3

PROJECT: 0838578A

KMAUGHAN 1/29/16 F:\0838578_G&M\PERMIT RENEWAL < FACILITY FLOOR PLAN_0838578 >

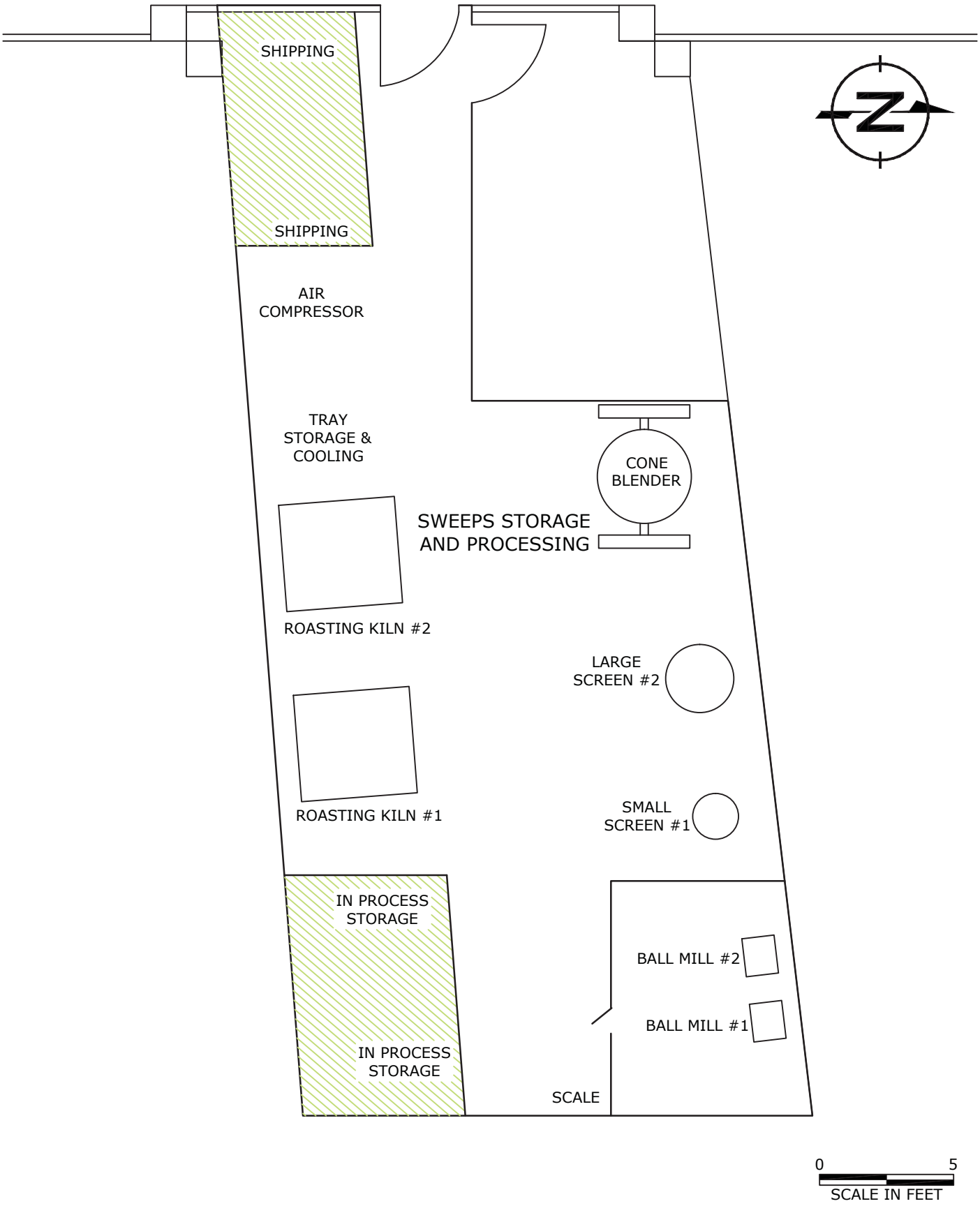

RAMBOLL ENVIRON

DRAFTED BY: KPM/RS | DATE: 1/27/2016

SWEEPS STORAGE AND PROCESSING ROOM

ATLAS PRECIOUS METALS, INC.

640 SOUTH HILL STREET, LOS ANGELES, CALIFORNIA

FIGURE **4**

PROJECT: 0838578A

RMSO 9/7/16 Q:\DRAWINGS\0838578A < FLOOR PLAN_(SWEEPS STORAGE)_0838578-2 >

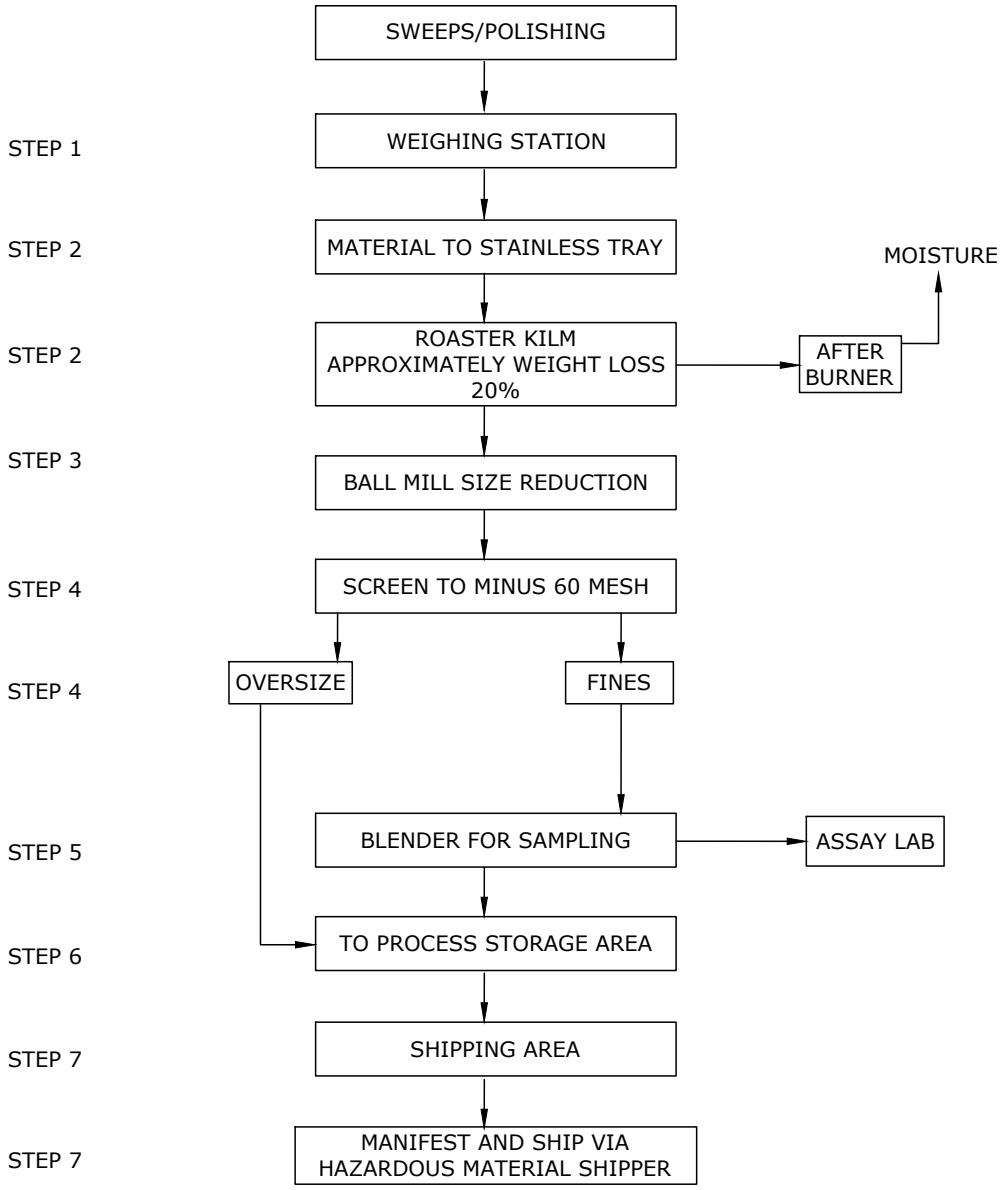

SOURCE:
"FLOW CHART FOR PROCESSING JEWELRY SWEEPS"
(PREVIOUS APPLICATION)

KMAUGHAN 1/28/16 F:\0838578_G&M\PERMIT RENEWAL < FLW PROCESS_0838578 >

RAMBOLL ENVIRON

DRAFTED BY: KPM | DATE: 1/25/2016

FLOW CHART FOR PROCESSING JEWELRY SWEEPS

ATLAS PRECIOUS METALS, INC.
640 SOUTH HILL STREET, LOS ANGELES, CALIFORNIA

FIGURE **5**

PROJECT: 0838578A

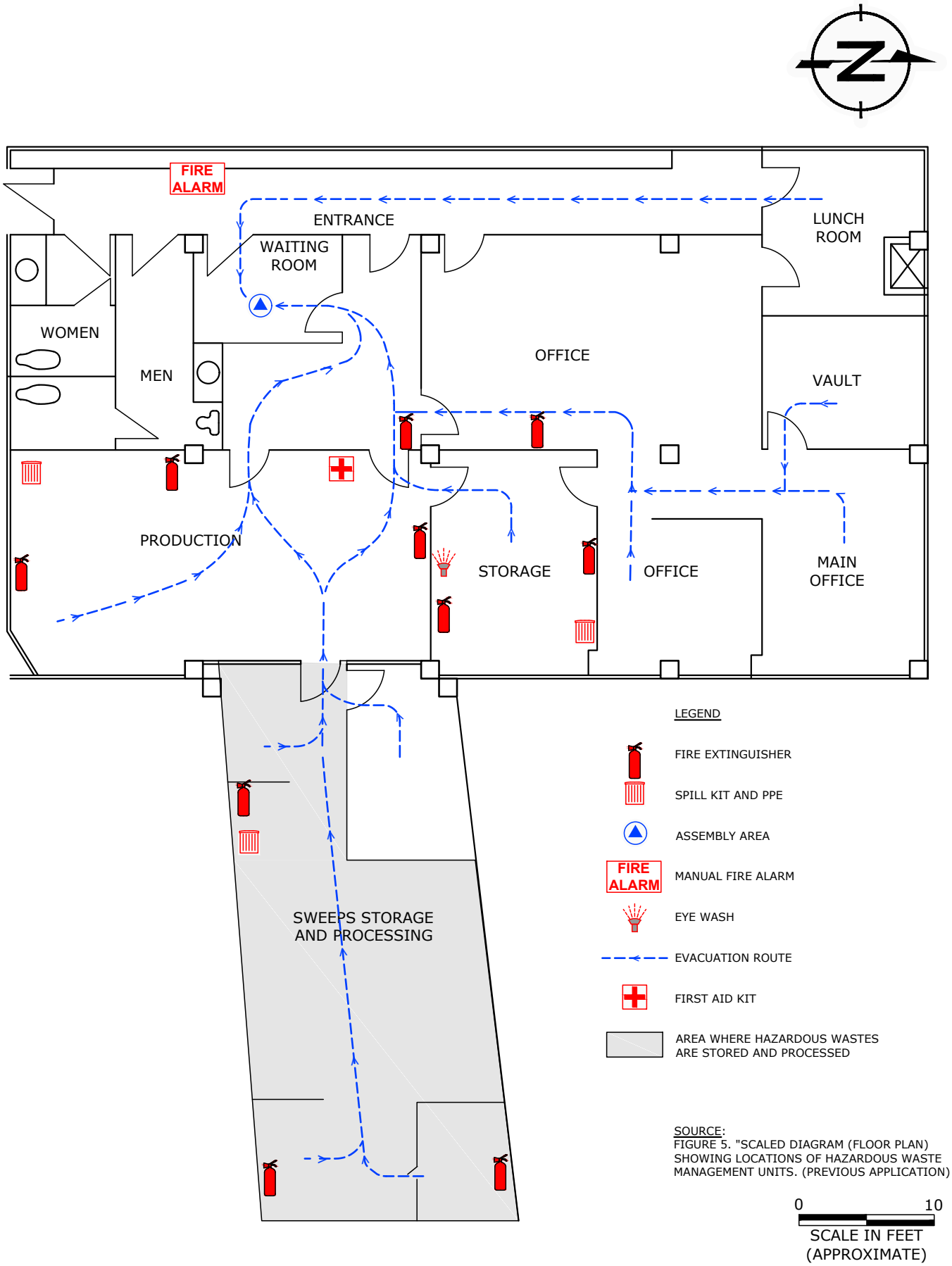

SOURCE:
FIGURE 5. "SCALED DIAGRAM (FLOOR PLAN) SHOWING LOCATIONS OF HAZARDOUS WASTE MANAGEMENT UNITS. (PREVIOUS APPLICATION)

RAMBOLL ENVIRON

EMERGENCY RESPONSE EQUIPMENT AND EVACUATION ROUTES

ATLAS PRECIOUS METALS, INC.
640 SOUTH HILL STREET, LOS ANGELES, CALIFORNIA

FIGURE 6

DRAFTED BY: KPM | DATE: 1/28/2016 | PROJECT: 0838578A

KMAUGHAN 1/29/16 F:\0838578_G&M\PERMIT RENEWAL < EMERGENCY EVAC ROUTES_0838578 >

EXHIBIT 1
GENERATOR WASTE CERTIFICATON FORM

GENERATOR WASTE CERTIFICATION

Receiving Facility: ATLAS PRECIOUS METALS, INC.
640 South Hill Street, Suite 743
Los Angeles, Ca 90014

Generator Facility:

_____
Name

_____
Street Address

_____
City, State, Zip Code

_____
Primary Contact

_____
Telephone

_____
Email address

_____
EPA ID Number (if any)

Waste Description and Waste Generation Process: The waste shipped by Generator to Atlas Precious Metals, Inc. consists solely of jewelry polishing / sweeps generated during jewelry manufacturing. The jewelry sweeps contain precious metals, other metals, and nonhazardous polishing compound. The jewelry sweeps may contain toxic metals in excess of federal and/or California hazardous waste thresholds. No other hazardous constituents are known or suspected to be present.

Generator Certification: I certify that the information submitted in this document is a true and accurate description of this waste. All relevant information pertaining to known or suspected hazards has been disclosed.

_____	_____	_____
Signature	Printed Name	Date

EXHIBIT 2
REFINING RECEIPT

0942

ATLAS PRECIOUS METALS INC

640 S. HILL ST. • SUITE 743 • LOS ANGELES, CA 90014 • WWW.APM9995.COM • 213-622-9995 • EPA#CAL000098454

REFINING RECEIPT

Customer Name _____ Date _____

Customer Address _____

City _____ State _____ Zip Code _____

Phone (_____) _____ Cell (_____) _____

Incoming Wt. "A"

Gross _____

Tare _____

Net _____

After Burn _____

Incoming Wt. "B"

Gross _____

Tare _____

Net _____

After Burn _____

Incoming Wt. Charge $ _____

_____ lb x _____ gr. P. Pound = _____ gr.

_____ lb x _____ gr. P. Pound = _____ gr.

_____ lb x _____ gr. P. Pound = _____ gr.

Gold _____ gr. x _____ Return = _____

Gold _____ gr. x _____ Return = _____

Pt _____ gr. x _____ Return = _____

$ _____

$ _____

Assay Fee $ _____

Seal # _____ **Seal #** _____

Notes

Customer Signature: _____

EXHIBIT 3
SAFETY DATA SHEET FOR POLISHING COMPOUND

SASSOUNIAN INC.
TOOLS - SUPPLIES - MACHINES
Complete Line of Jewelry Mfg. Supplies
sassounian.com
info@sassounian.com
716 South Olive Street, Los Angeles, CA 90014
Tel: +1.213.627.1206
Fax: +1.213.623.6981

Material Safety Data Sheet

FABULUSTRE, Item #4731300

TRADE NAME / SYNONYMS .....: FABULUSTRE 1 LB TUBE
CHEMICAL NAME / SYNONYMS: BUFFING COMPOUND
CHEMICAL FAMILY.....:
FORMULA .....: MIXTURE
PRODUCT CODE.....: **4731300**

********** **HAZARDOUS INGREDIENTS** **********

DOES PRODUCT CONTAIN HAZARDOUS INGREDIENTS? (Y,N,N/A,N/I) : Y

CHEMICAL/COMMON NAME	CAS-NUMBER	%	PEL-OSHA	TLV-ACGIH
ALUMINUM OXIDE	1344-28-1		10.5MGM3	
STEARIC ACID (FATTY ACID)	57-11-4			

DOES PRODUCT CONTAIN CARCINOGENS (NTP, IARC, OR OSHA)? (Y,N,N/A,N/I): N

********** HEALTH HAZARD DATA **********

HEALTH EFFECTS (ACUTE AND CHRONIC)
ACUTE: COUGHING AND/OR SNEEZING IF DUST IS GENERATED DURING USE. OVER EXPOSURE MAY CAUSE TEMPORARY IRRITATION OF EYES, EARS, NOSE, AND RESPIRATORY TRACT. POSSIBLE SKIN OR EYE IRRITANT.

PRIMARY ROUTES OF ENTRY
INHALATION, INGESTION, SKIN.

MEDICAL CONDITIONS AGGRAVATED BY EXPOSURE
UPPER RESPIRATORY AILMENTS

EMERGENCY FIRST AID PROCEDURES
INHALATION: REMOVE TO FRESH AIR.SKIN AND EYES: FLUSH WITH WATER FOR 15 MINUTE INCLUDING UNDER EYELIDS. INGESTION: SEEK IMMEDIATE MEDICAL ATTENTION.

********** CHEMICAL DATA **********

BOILING POINT(F)....	205 C	SPECIFIC GRAVITY(WATER=1).....	1.00
VAPOR PRESSURE(MMHG)	<1MBAR	PERCENT VOLATILE BY VOLUME(%).....	N/A
VAPOR DENSITY(AIR=1)	N/A	EVAP RATE(N/A =1)	N/A

SOLUBILITY IN WATER.. INSOLUBLE

SASSOUNIAN INC.
TOOLS - SUPPLIES - MACHINES
Complete Line of Jewelry Mfg. Supplies
sassounian.com
info@sassounian.com 716 South Olive Street, Los Angeles, CA 90014
Tel: +1.213.627.1206
Fax: +1.213.623.6981

Material Safety Data Sheet

FABULUSTRE, Item #4731300

APPEARANCE AND ODOR INFORMATION
WHITE COLORED COMPOUND WITH WAXY ODOR

********** **PHYSICAL HAZARD DATA** **********

FLASH POINT (METHOD USED) 520 FCOC FLAMMABLE LIMITS-LEL= N/A UEL= N/A

EXTINGUISHING MEDIA
CO2, DRY CHEMICAL, FOAM,WATER FOG

SPECIAL FIRE FIGHTING PROCEDURES
WEAR PROPER PERSONAL PROTECTION AND SELF CONTAINED BREATHING APPARATUS. TOXIC VAPORS AMY BE RELEASED UNDER FIRE CONDITIONS.

UNUSUAL FIRE AND EXPLOSION HAZARDS
NO APPLICABLE INFORMATION FOUND.

********** REACTIVITY DATA **********

INCOMPATIBILITY (MATERIALS TO AVOID)
NO APPLICABLE INFORMATION FOUND.

HAZARDOUS DECOMPOSITION PRODUCTS
IF INCOMPLETE COMBUSTION OCCURS, CARBON MONOXIDE WILL FORM.

WILL HAZARDOUS POLYMERIZATION OCCUR
NO

CONDITIONS TO AVOID/POLYMERIZATION
NO APPLICABLE INFORMATION FOUND.

IS THE PRODUCT STABLE
YES

CONDITIONS TO AVOID/STABILITY
KEEP AWAY FROM HEAT AND SOURCES OF IGNITION.

********** SPILL AND LEAK PROCEDURES **********

STEPS TO BE TAKEN IN CASE MATERIAL IS RELEASED OR SPILLED
USE SUITABLE MEANS TO MINIMIZE GENERATING DUST.(IE. VACUUM) DRY SWEEPING IS NOT RECOMMENDED.

SASSOUNIAN INC.
TOOLS - SUPPLIES - MACHINES
Complete Line of Jewelry Mfg. Supplies
sassounian.com
Info@sassounian.com 716 South Olive Street, Los Angeles, CA 90014
Tel: +1.213.627.1206
Fax: +1.213.623.6981

Material Safety Data Sheet

FABULUSTRE, Item #4731300

WASTE DISPOSAL METHOD
IN ACCORDANCE WITH LOCAL, STATE AND FEDERAL REGULATIONS

********** **EXPOSURE CONTROL INFORMATION** **********

VENTILATION

LOCAL EXHAUST TO MEET 10.0MG/M3 MECHANICAL (GEN) DUST COLLECTOR
SPECIAL..... N/A OTHER..... N/A

RESPIRATORY PROTECTION
NIOSH/MSHA APPROVED DUST RESPIRATOR ADEQUATE TO REDUCE EXPOSURE 10.5 MG/M3

PROTECTIVE GLOVES
ADEQUATE TO PREVENT SKIN CONTACT

OTHER PROTECTIVE EQUIPMENT
SAFETY GOGGLES.AND EQUIPMENT ADEQUATE TO PROTECT CLOTHING.

OTHER ENGINEERING CONTROLS
N/A

WORK PRACTICES
SEE HYGENIC PRACTICES

HYGENIC PRACTICES
AFTER HANDLING PRODUCT, WASH THOROUGHLY WITH SOAP AND WATER. FOLLOW ESTABLISH ED SAFETY POLICIES.

********** SPECIAL PRECAUTIONS **********

PRECAUTIONS TO BE TAKEN IN HANDLING AND STORAGE
STORE AT ROOM TEMPERATURE. DO NOT STORE NEAR EXCESSIVE HEAT OR OPEN FLAME.

MAINTENANCE PRECAUTIONS
N/A

OTHER PRECAUTIONS
N/A

OTHER COMMENTS
THE INFORMATION HEREIN, IS GIVEN IN GOOD FAITH, NO WARRANTY, EXPRESS OR IMPLIED, IS MADE.

Hazard Communication Standard READ TECHNICAL BULLETIN # 1018

IDENTITY (As Used on Label and List)

LEAROK 832, 882-X, 884E, 887, 1914, 2520, 2924
2-B-26X, 2-B-36X, 2-B-111, 2-X, 4-M-30, [redacted]
WW,

Section I BW-760

SASSOUNIAN INC.
TOOLS - SUPPLIES - MACHINES
COMPLETE LINE OF JEWELRY SUPPLY

716 S. Olive Street Tel: (213) 627-1220
Los Angeles, CA 90014 (213) 627-1206
www.sassouniantools.com Outside CA: 1-800-544-4419
E-mail: info@sassouniantools.com Fax: (213) 623-6981

tity Information

Hazardous Component (Specific Chemical Identity: Common Name(s))	OSHA PEL	Soft Tripoli %
Abrasive, fatty acids, glycerides and petroleum wax/oils mix		
containing:		
CAS# 14808-60-7 Silica dust	10 mg/m^3 (SiO_2+2)	67-80%

WARNING: The dust generated during buffing may contain silica or tripoli as shown above.

TLV-TWA = 0.1 mg/m^3 (respirable dust). NIOSH has recommended changing to 0.05 mg/m^3.

ALL THE COMPONENTS REGULATED BY ACGIH, DOT, EPA, IARC, NCI, NFPA, NTP, FEDERAL OSHA AND "RIGHT-TO-KNOW" LAW FOR ALL 50 STATES ARE LISTED ABOVE.

Section III — Physical/Chemical Characteristics

Boiling Point > 700°F	Melting Point > 125°F	Specific Gravity (H_2O = 1) or Relative density 1.6-1.8
Vapor Pressure (mm Hg) NA	Vapor Density (AIR = 1) NA	Evaporation Rate (Butyl Acetate = 1) NA
Solubility in Water Negligible	pH: NA	Appearance and Odor Dense white colored brick w/mild odor

Section IV — Fire and Explosion Hazard Data

NFPA RATING: 1-1-0

Flash Point (Method Used)	Flammable Limits	LEL	UEL
> 350°F COC	Not established		

Extinguishing Media
Water fog, foam, dry chemical, carbon dioxide

Special Fire Fighting Procedures
Wear self-contained breathing apparatus if there is potential for exposure to smoke, fumes or products of combustion.

Unusual Fire and Explosion Hazards
Water or foam may cause violent frothing, especially if sprayed directly into burning liquid.

After buffing compounds have been used there is normally produced a waste containing dried buffing compound, buffing wheel lint of cotton, polyester, etc. (determined from the buffing wheel vendor); plus dust from the material that was polished. The use of extinguishing media in a fire from this waste should be evaluated as to the material that was polished. Fibre lint with the dried buffing compound may make the mixture combustible. The addition of metal dust like aluminum, titanium, or magnesium to the cotton lint and dried buffing compound may increase the mixture's degree of combustibility. This addition of metal dust may change the recommended extinguishing media.

For buffing compound waste, the general recommended extinguishing media is water by flooding, chemical foam, or carbon dioxide. The recommendation for a specific metal dust may be dry chemical foam only, or smothering. Individual situations will vary according to the material that was polished. The metal supplier should be questioned as to the recommended fire fighting media or procedure when his material is involved.

Section V — Reactivity Data

Stability			Conditions to Avoid
	Unstable		Temperatures over 350° F
	Stable	X	

Incompatibility (Materials to Avoid): Contact with powerful oxidizers: fluorine, chlorine, may cause fire. Contact with strong base or alkali may cause heat evolution.

Hazardous Decomposition or Byproducts: Carbon and smoke

Hazardous Polymerization			Conditions to Avoid
	May Occur		None known
	Will Not Occur	X	

Section VI — Health Hazard Data

Routes of Entry:	Inhalation?	Skin?	Ingestion?
	Yes	Yes	No

Health Hazards (Acute and Chronic)

No hazard is expected from the unused product. During use in a buffing operation dust may irritate the skin or damage the outer surface of the eye by abrasive action. Ingestion may cause gastrointestinal disturbances.

The dust generated during buffing may include silica. Medical and scientific evidence has suggested that as the amount and/or duration of silica dust inhalation increases, the risk of serious respiratory disease also increases. IARC Monographs on the Evaluation of the Carcinogenicity Risk of Chemicals to Humans, Silica and some Silicates (1987), evaluated there is "sufficient evidence for the carcinogenicity of crystalline silica to experimental animals" and "limited evidence" with respect to humans. Implementation, monitoring and evaluating your own industrial hygiene and dust control program will reduce the risk associated with silica/tripoli dust inhalation.

Carcinogenicity	NTP?	IARC Monographs?	OSHA Regulated?
	Not reported	Yes - Level 2A Grouping	Not reported

Signs and Symptoms of Exposure: Inadequate protection during a buffing operation may cause disturbed eye vision and/or skin irritation. Excessive inhalation exposure includes shortness of breath and reduced pulmonary function.

Medical Conditions Generally Aggravated by Exposure: Individuals with pulmonary and/or respiratory disease, including, but not limited to, asthma and bronchitis, or subject to eye irritation, should be precluded from exposure.

Emergency and First Aid Procedures: Eye: Flush with water for 15 minutes. Skin: Wash with soap and water. Ingestion of large amounts: induce vomit. Gross inhalation: Remove to fresh air. Seek medical attention as needed.

Section VII — Precautions for Safe Handling and Use

Steps to Be Taken in Case Material is Released or Spilled: Wear protective clothing. Reclaim for reuse if possible, or sweep, scoop up, and containerize for later disposal. This product is not a hazardous waste by itself, but be sure to check if it has come in contact with a hazardous substance or material before disposal.

Waste Disposal Method: Dispose of in accordance with all local, state and federal regulations. Waste generated from a buffing operation can contain lint which may be combustible.

Precautions to Be Taken in Handling and Storing: Keep out of sun and away from heat sources. Protect paste or liquid products from freezing. Observe all safeguards for container residue until cleaned or destroyed.

Other Precautions: During a buffing operation, use an exhaust, eye protection, clothing and gloves to prevent compound dust or the material being removed during buffing from entering the nose, throat and/or skin of the operator. OSHA studies have found a breathing zone concentration for buffing equipment with no ventilation to be approximately 1.4 mg/m³ for total respirable dust.

Section VIII — Control Measures

Respiratory Protection (Specify Type): During buffing use OSHA approved dust/mist respirator similar to #3710 from 3M

Ventilation		
	Local Exhaust: When airborne exposure limits are exceeded during use.	Special: Consult standards for design
	Mechanical (General): Adequate for storage and handling	Other

Protective Gloves	Eye Protection
Cloth heavy duty during use	Safety glasses during use

Other Protective Clothing or Equipment: Clean workclothes. Eye wash. See Section VII - Other Precautions

Work Hygienic Practices: Wash after physical contact and before eating. Do not permit dust to accumulate in work area. TRAIN your EMPLOYEES and WARN your CUSTOMERS (in the event of resale) in accordance with all "Right-to-Know" regulations.

Material Safety Data Sheet

May be used to comply with
OSHA's Hazard Communication Standard,
29 CFR 1910.1200. Standard must be
consulted for specific requirements.

U.S. Department of Labor

Occupational Safety and Health Administration
(Non-Mandatory Form)
Form Approved
OMB No. 1218-0072

white Diamond

IDENTITY *(As Used on Label and List)* *XO- LUMINESCENCE* *LUMINESCENCE - 3-H*	Note: Blank spaces are not permitted. If any item is not applicable, or no information is available, the space must be marked to indicate that.

Section I

Manufacturer's Name	Emergency Telephone Number
SASSOUNIAN INC. TOOLS - SUPPLIES - MACHINES COMPLETE LINE OF JEWELRY SUPPLY	716 S. Olive Street Los Angeles, CA 90014 www.sassouniantools.com E-mail: info@sassouniantools.com Tel: (213) 627-1220 (213) 627-1206 Outside CA: 1-800-544-4419 Fax: (213) 623-6981

Section II - Hazard Ingredients/Identity Information

Hazardous Components (Specific Chemical Identity; Common Name(s))	OSHA PEL	ACGIH TLV	Other Limits Recommended	%(optional)
SILICON DIOXIDE SiO_2 *** SILICA (CAS #14808-60-7)	10(MG/M^3)	0.05 MG/M^3 TWA		
	(RESPIRABLE DUST)			
BARIUM SULFATE BARYTES (CAS #7727-43-7)	15 MG/M^3	10 MG/M^3		
(NON-HAZARDOUS ANIMAL & VEGETABLE FATS USED AS BINDERS)				

***Supplemental MSDS from manufacturer provided upon request

Section III - Physical/Chemical Characteristics

Boiling Point	N/A	Specific Gravity (H_2O = 1)	N/A
Vapor Pressure (mm Hg.)	N/A	Melting Point	135° F
Vapor Density (AIR = 1)	N/A	Evaporation Rate (Butyl Acetate = 1)	N/A
Solubility in Water PARTIALLY SOLUBLE IN WATER			
Appearance and Odor SOLID BAR, STICK OR LICK WITH MILD ODOR			

Section IV - Fire and Explosion Hazard Data

Flash Point (Method Used) GREATER THAN 220°C; COC	Flammable Limits N/A	LEL N/A	UEL N/A
Extinguishing Media WATER FOG, FOAM OR CARBON DIOXIDE			
Special Fire Fighting Procedures WEAR PROPER PERSONAL PROTECTION AND SELF-CONTAINED BREATHING APPARATUS			
Unusual Fire and Explosion Hazards NONE KNOWN			

Section V - Reactivity Data

Stability	Unstable		Conditions to Avoid N/A
	Stable	X	
Incompatibility *(Materials to Avoid)* N/A			
Hazardous Decomposition or Byproducts N/A			
Hazardous Polymerization	May Occur		Conditions to Avoid N/A
	Will Not Occur	X	

Section VI - Health Hazard Data

Route(s) of Entry:	Inhalation? YES	Skin? YES	Ingestion? YES
Health Hazards *(Acute and Chronic)* EXCESSIVE INHALATION OF DUST MAY CAUSE LUNG DISEASE OR SILICOSIS. CRYSTALLINE SILICA IS CONSIDERED TO BE CARCINOGENIC TO HUMANS WHEN INHALED IN EXCESSIVE AMOUNTS. FOR FURTHER INFORMATION CONSULT "ADVERSE EFFECTS OF CRYSTALLINE SILICA EXPOSURE" PUBLISHED BY THE AMERICAN THORACIC SOCIETY MEDICAL SECTION OF THE AMERICAN LUNG ASSOCIATION.			
Carcinogenicity: SILICA	NTP? YES	IARC Monographs? YES	SEE: www.osha-slc.gov/SLTC/solocacrystalline/index.htm

* U.S.G.P.O.: 1986 - 491 - 529/45775

Signs and Symptoms of Exposure INHALATION OF DUST MAY CAUSE IRRITATION TO THE NOSE, THROAT & RESPIRATORY PASSAGES. SYMPTOMS INCLUDE COUGH, SHORTNESS OF BREATH WHEEZING, AND REDUCED PULMONARY FUNCTION. SKIN EXPOSURE MAY CAUSE DRYNESS AND/OR IRRITATION.
Medical Conditions Generally Aggravated by Exposure RESPIRATORY DISEASE, ASTHMA, BRONCHITIS, SENSITIVE SKIN CONDITIONS
Emergency and First Aid Procedures FOR DUST EXPOSURE MOVE TO FRESH AIR. IN CASE OF CONTACT WITH EYES RINSE WITH PLENTY OF WATER FOR AT LEAST 15 MIN. IF ANY IRRITATION PERSISTS, SEEK MEDICAL TREATMENT.

Section VII - Precautions for Safe Handling and Use

Steps to Be Taken in Case Material is Released or Spilled USE DUSTLESS METHODS (VACUUM). PLACE INTO CLOSABLE CONTAINER FOR DISPOSAL, OR FLUSH WITH WATER. DO NOT DRY SWEEP. WEAR PROTECTIVE EQUIPMENT SPECIFIED BELOW.
Waste Disposal Method IF UNCONTAMINATED, DISPOSE AS AN INERT, NON-METALLIC MINERAL. IF CONTAMINATED, DISPOSE IN ACCORDANCE WITH ALL APPLICABLE STATE/PROVINCIAL AND FEDERAL REGULATIONS.
Precautions to Be taken in Handling and Storing KEEP OUT OF SUN AND AWAY FROM DIRECT HEAT TO PREVENT SOFTENING OR MELTING OF COMPOUND. PROTECT CARTONS OR FIBER DRUMS FROM EXCESSIVE MOISTURE.
Other Precautions SUITABLE EXHAUST EQUIPMENT IS NECESSARY. WEAR PROTECTIVE EQUIPMENT AS SPECIFIED BELOW TO PREVENT DUST OR MATERIALS BEING REMOVED DURING THE BUFFING OPERATION FROM ENTERING THE NOSE, THROAT OR SKIN.

Section VIII - Control Measures

Respiratory Protection *(Specify Type)* NIOSH APPROVED DUST RESPIRATOR		
Ventilation YES	Local Exhaust ADEQUATE TO REDUCE EXPOSURE TO	Special BELOW LIMITS LISTED IN SECTION II
	Mechanical *(General)* N/A	Other N/A

Protective Gloves ADEQUATE TO PROTECT SKIN	Eye Protection SAFETY GOGGLES OR SHIELD TO PROTECT EYES
Other Protective Clothing or Equipment SHOP COAT OR COVERALLS TO PROTECT CLOTHING	
Work/Hygienic Practices WASH EXPOSED SKIN WITH SOAP & WATER BEFORE BREAKS AND AT END OF SHIFT	

The information set forth herein is based on technical data the Sattex Corporation believes reliable. It is intended for use by persons having technical skills and at their own discretion and risk. Since conditions of use are outside the control of Sattex Corporation, no warranties, expressed or implied, are made and no liability is assumed in connection with and use of this information. Any use of this data and information must be determined by the user to be in accordance with federal, state and local laws and regulations.

* U.S.G.P.O.: 1986 - 491 - 529/45775

MATERIAL SAFETY DATA SHEET

MSDS No: 011

SECTION 1: IDENTIFICATION OF THE SUBSTANCE/PREPARATION AND OF THE COMPANY/ UNDERTAKING

UNIMIN CORPORATION
258 Elm Street
New Canaan, CT 06840

Emergency Telephone Number
(203) 966-8880

Telephone Number for Information
(203) 966-8880

PRODUCT NAME: Crystalline Silica in the form of Quartz – various grades

SYNONYMS: Quartz, Crystalline Silica, Silicon Dioxide

Date Prepared: August 2003

SECTION 2: COMPOSITION/INFORMATION ON INGREDIENTS

CAS# / EINECS #	Component	Percentage	EU Classification (67/548/EEC)
14808-60-7 / 238-878-4	Crystalline Silica in the form of Quartz	87 - 99.9%	Xn R48/20

Refer to section 16 for further information on EU Classification.

See Section 8 for occupational exposure limit information

SECTION 3: HAZARDS IDENTIFICATION

This product is a chemically inert, non-combustible mineral.

EMERGENCY OVERVIEW
WARNING!

Lung injury and cancer hazard. Do not breathe dust. May cause delayed lung injury. Long term exposure can cause silicosis. Silicosis is a respiratory disease, which can result in delayed, disabling and sometimes fatal lung injury. IARC has determined that crystalline silica inhaled from occupational sources can cause cancer in humans. Risk of injury is dependent on the duration and level of exposure. A single exposure will not result in serious adverse effects. See **"Health Hazards"** in Section 11 for detailed information. See exposure limit presentation in Section 8 for further information.

Avoid creating dust when handling, using or storing. Use only with adequate ventilation to keep exposure below recommended exposure limits.

EU Classification of Substance/Preparation: Harmful (Xn) R48/20

SECTION 4: FIRST AID MEASURES

Gross Inhalation: Remove victim to fresh air. If breathing has stopped, perform artificial respiration. If breathing is difficult have qualified personnel administer oxygen. Get prompt medical attention.

Skin Contact: No first aid should be needed since dermal contact with this product does not affect the skin. Wash exposed skin with soap and water before breaks and at the end of the shift.

Eye Contact: Flush the eyes immediately with large amounts of running water, lifting the upper and lower lids occasionally. If irritation persists or for imbedded foreign body, get immediate medical attention.

Ingestion: If large amounts are swallowed, get immediate medical attention.

*****SUPPLEMENTAL TO SATTEX MSDS SHEETS for XO-& 3-H Luminescence

SECTION 5: FIREFIGHTING MEASURES

Flash Point (Method Used): Fully oxidized, will not burn.

Autoignition Temp.: Will not burn.

Flammable Limits: LEL: Not applicable UEL: Not applicable

Extinguishing Media: This product will not burn but is compatible with all extinguishing media. Use any media that is appropriate for the surrounding fire.

Special Fire Fighting Procedures: None required with respect to this product. Firefighters should always wear self-contained breathing apparatus for fires indoors or in confined areas.

Unusual Fire and Explosion Hazards: None.

Hazardous Combustion Products: None.

SECTION 6: ACCIDENTAL RELEASE MEASURES

Wear appropriate protective equipment. If uncontaminated, collect using dustless method (HEPA vacuum or wet method) and place in appropriate container for use. If contaminated: a) use appropriate method for the nature of contamination, and b) consider possible toxic or fire hazards associated with the contaminating substances. Collect for appropriate disposal.

SECTION 7: HANDLING AND STORAGE

Do not breathe dust. Do not rely on your sight to determine if dust is in the air. Silica may be in the air without a visible dust cloud. Use normal precautions against bag breakage or spills of bulk material. Avoid creation of respirable dust. Do not use as a dry abrasive blasting agent. ANSI/AIHA Z9.4:1997 recommends that silica sand be prohibited as an abrasive blasting agent for use in fixed location abrasive-blast enclosures. Use good housekeeping in storage and use areas to prevent accumulation of dust in work area.

To reduce the risk of developing silicosis, lung cancer and other adverse health effects, NIOSH recommends reducing airborne exposure levels as low as possible below NIOSH's recommended exposure limit, substituting less hazardous materials when feasible, using appropriate respiratory protection when source controls cannot keep exposures below the recommended limit and making medical examinations available to exposed workers.

Use adequate ventilation and dust collection. To minimize exposure, wear a respirator approved for silica dust when using, handling, storing or disposing of this product or bag. Refer to the most recent standards of ANSI (Z88.2), OSHA (29 CFR 1910.134), MSHA (30 CFR Parts 56 and 57) and NIOSH Respirator Decision Logic. Maintain, clean and fit test respirators in accordance with OSHA regulations. Maintain and test ventilation and dust collection equipment. Launder clothing that has become dusty. Empty containers (bags, bulk containers, storage tanks, etc.) retain silica residue and must be handled in accordance with the provisions of this Material Safety Data Sheet. WARN and TRAIN employees in accordance with state and federal regulations.

WARN YOUR EMPLOYEES (AND YOUR CUSTOMERS AND USERS IN CASE OF RESALE) BY POSTING, AND OTHER MEANS, OF THE HAZARDS AND OSHA AND ANY OTHER APPLICABLE REGULATORY PRECAUTIONS TO BE USED. PROVIDE TRAINING FOR YOUR EMPLOYEES ABOUT OSHA PRECAUTIONS.

See also American Society for Testing and Materials (ASTM) Standard Practice E1132-99a, "Standard Practice for Health Requirements Relating to Occupational Exposure to Respirable Crystalline Silica".

Additional information on silica hazards and precautionary measures can be found at the following websites:

NIOSH Joint Campaign on Silicosis Prevention http://www.cdc.gov/niosh/silcampn.html
OSHA Crystalline Silica Website http://www.osha-slc.gov/SLTC/silicacrystalline/index.html
MSHA Silicosis Prevention Website http://www.msha.gov/S&HINFO/SILICO/SILICO.HTM
NIOSH Hazard Review – Health Effects of Occupational Exposure to Respirable Crystalline Silica Website http://www.cdc.gov/niosh/02-129pd.html

SECTION 8: EXPOSURE CONTROLS/PERSONAL PROTECTION

Exposure Limits

Definitions:
MSHA means Mine Safety and Health Administration.
NIOSH means National Institute for Occupational Safety and Health.
OSHA means Occupational Safety and Health Administration.
PEL means OSHA Permissible Exposure Limit.
REL means the NIOSH Recommended Exposure Limit.
TLV means American Conference of Governmental Industrial Hygienists (ACGIH) Threshold Limit Value.
TWA means time-weighted average.

OSHA PEL and MSHA Exposure Limit for Crystalline Silica, Quartz (Respirable measured as an 8-hour TWA) $\frac{10\ mg/m^3}{\%\ Silica + 2}$

TLV- 0.05 mg/m^3 8-hour TWA (respirable fraction)

NIOSH has issued its REL of 50 micrograms respirable free silica per cubic meter of air (0.05 mg/m^3) as determined by a full shift sample up to 10-hour working day, 40 hours per week. NIOSH has recommended that OSHA and MSHA adopt the NIOSH REL as the OSHA PEL and the MSHA Exposure Limit. The 1974 NIOSH Criteria for a Recommended Standard for Occupational Exposure to Crystalline Silica should be consulted for more detailed information. Additionally, NIOSH, in a publication entitled NIOSH Hazard Review Health Effects of Occupational Exposure Responsible Silica (April 2002), stated "...that workers have a significant risk of developing chronic silicosis when they are exposed to respirable crystalline silica over a working lifetime at the current Occupational Safety and Health Administration (OSHA) permissible exposure limit (PEL), the Mine Safety and Health Administration (MSHA) PEL, or the National Institute for Occupational Safety and Health (NIOSH) recommended exposure limit (REL). ...Current sampling and analytical methods used to evaluate occupational exposure to respirable crystalline silica do not meet the accuracy criterion needed to quantify exposures at concentrations below the NIOSH REL of 0.05 mg/m^3 as a time-weighted average (TWA) for up to a 10-hr workday during a 40-hr workweek. Until improved sampling and analytical methods are developed for respirable crystalline silica, NIOSH will continue to recommend an exposure limit of 0.05 mg/m^3 to reduce the risk of developing silicosis, lung cancer, and other adverse health effects. NIOSH also recommends minimizing the risk of illness that remains for workers exposed at the REL by substituting less hazardous materials for crystalline silica when feasible, by using appropriate respiratory protection when source controls cannot keep exposures below the NIOSH REL, and by making medical examinations available to exposed workers."

Crystalline silica exists in several forms, the most common of which are quartz (i.e. this product), trydimite and cristobalite, with quartz being the most common form found in nature. If quartz is heated to more than 870° C, it can change form to trydimite and if quartz is heated to more than 1450° C, it can change form to cristobalite. The OSHA PELs and MSHA Exposure Limits for trydimite and cristobalite are one-half of the PEL for quartz.

Ventilation: Use local exhaust as required to maintain exposures as far as possible below applicable occupational exposure limits. See also ACGIH "Industrial Ventilation - A Manual for Recommended Practice" (current edition). Control of exposure to dust must be accomplished as far as feasible by accepted engineering control measures (for example, enclosure or confinement of the operation, general or local exhaust ventilation and substitution of less toxic materials).

Respiratory Protection: When effective engineering controls are not feasible, or while they are being implemented, appropriate respiratory protection must be used. Use appropriate respiratory protection for respirable particulates based on consideration of airborne workplace concentrations and duration of exposure arising from intended end use. Refer to the most recent standards of ANSI (Z88.2), OSHA (29 CFR 1910.134), MSHA (30 CFR Parts 56 and 57) and NIOSH Respirator Decision Logic.

Gloves: Protective gloves recommended.

Eye Protection: Safety glasses or goggles recommended.

Other Protective Equipment/Clothing: As appropriate for the work environment. Dusty clothing should be laundered before reuse.

SECTION 9: PHYSICAL AND CHEMICAL PROPERTIES

Appearance and Odor: White powder, odorless.

pH: Not applicable
Boiling Point: 4046°F / 2230°C
Melting Point: 2930°F / 1610°C
Solubility in Water: Negligible
Percent Volatile: 0%
Autoignition Temp.: Will not burn

Specific Gravity (water=1): 2.65
Vapor Pressure: Not applicable
Vapor Density: Not applicable
Evaporation Rate: Not applicable
Flash Point (Method Used): Fully oxidized, will not burn
Flammable Limits: LEL: Not applicable
UEL: Not applicable

SECTION 10: STABILITY AND REACTIVITY

Stability: Stable
Conditions to Avoid: None

Incompatibility: Powerful oxidizing agents such as fluorine, chlorine trifluoride, manganese trioxide, etc.

Hazardous Decomposition Products: Silica will dissolve in hydrofluoric acid producing a corrosive gas, silicon tetrafluoride.

Hazardous Polymerization: Will not occur.
Conditions to Avoid: None

SECTION 11: TOXICOLOGICAL INFORMATION

HEALTH HAZARDS:

Inhalation: Breathing silica dust may not cause noticeable injury or illness even though permanent lung damage may be occurring. Inhalation of dust may have the following serious chronic health effects:

Silicosis: Excessive inhalation of respirable crystalline silica dust may cause a progressive, disabling and sometimes fatal lung disease called silicosis. Symptoms include cough, shortness of breath, wheezing, non-specific chest illness and reduced pulmonary function. This disease is exacerbated by smoking. Individuals with silicosis are predisposed to develop mycobacterial infections (tuberculous and non-tuberculous) and fungal infections. Inhalation of air with a very high concentration of respirable silica dust can cause the most serious forms of silicosis in a matter of months or a few years. Some epidemiologic studies have concluded that there is significant risk of developing silicosis even at airborne exposure levels that are equal to the recommended NIOSH REL, the ACGIH TLV, the OSHA PEL, and the MSHA Exposure Limit.

Cancer Status: The International Agency for Research on Cancer has determined that crystalline silica inhaled in the form of quartz or cristobalite from occupational sources is carcinogenic to humans (Group 1 - carcinogenic to humans). Refer to IARC Monograph 68, Silica, Some Silicates and Organic Fibres (published in June 1997) in conjunction with the use of these materials. The National Toxicology Program classifies respirable crystalline silica as "known to be a human carcinogen". Refer to the Tenth Report on Carcinogens (2002). The American Conference of Governmental Industrial Hygienists (ACGIH) classifies crystalline silica, quartz, as a suspected human carcinogen (A2).

Other Data with Possible Relevance to Human Health:

There is some evidence that breathing respirable crystalline silica or the disease silicosis is associated with an increased incidence of significant disease endpoints such as scleroderma (an immune system disorder manifested by fibrosis of the lungs, skin and other internal organs) rheumatoid arthritis, systemic lupus, erythematosus, sarcoidosis, chronic bronchitis, chronic obstructive pulmonary disease (COPD), emphysema, chronic kidney disease and end-stage renal disease.

For further information consult "Adverse Effects of Crystalline Silica Exposure" published by the American Thoracic Society Medical Section of the American Lung Association, American Journal of Respiratory and Critical Care Medicine, Volume 155, pages 761-768, 1997, and see also NIOSH Hazard Review – Health Effects of Occupational Exposure to Respirable Crystalline Silica, April 2002 (see Section 7 for NIOSH Hazard Review Website).

Skin Contact: No adverse effects expected..

Eye Contact: Contact may cause mechanical irritation and possible injury.

Ingestion: No adverse effects expected for normal, incidental ingestion.

Chronic Health Effects: See "Inhalation" subsection above with respect to silicosis, cancer status and other data with possible relevance to human health.

Medical Conditions Aggravated by Exposure: Individuals with respiratory disease, including but not limited to asthma and bronchitis, or subject to eye irritation, should not be exposed to respirable quartz dust.

Signs and Symptoms of Exposure: Exposure to dust may cause mucous membrane and respiratory irritation, cough, sore throat, nasal congestion, sneezing and shortness of breath. However, there may be no immediate signs or symptoms of exposure to hazardous concentrations of respirable crystalline silica (quartz). See "Inhalation" subsection above for symptoms of silicosis. The absence of symptoms is not necessarily indicative of safe conditions.

Acute Toxicity Values: Silica: LD50 oral rat >22,500 mg/kg.

SECTION 12: ECOLOGICAL INFORMATION

Silica: LC50 carp >10,000 mg/L/72 hr. This product is not expected to present an environmental hazard.

SECTION 13: DISPOSAL CONSIDERATIONS

Waste Disposal Method: Silica is not classified as a hazardous waste under US EPA RCRA regulations. If uncontaminated, dispose as an inert, non-metallic mineral. If contaminated, dispose in accordance with all applicable local, state/provincial and federal regulations in light of the contamination present. Local regulations may be more stringent than regional and national requirements. It is the responsibility of the waste generator to determine the toxicity and physical characteristics of the material to determine the proper waste identification and disposal in compliance with applicable regulations.

SECTION 14: TRANSPORT INFORMATION

U.S. DOT HAZARD CLASSIFICATION
Proper Shipping Name: Not Regulated
Technical Name: N/A
UN Number: N/A
Hazard Class/Packing Group: N/A
Labels Required: None
DOT Packaging Requirements: N/A
Exceptions: N/A

SECTION 15: REGULATORY INFORMATION

SARA 311/312: Hazard Categories for SARA Section 311/312 Reporting: Chronic Health

SARA 313 This Product Contains the Following Chemicals Subject to Annual Release Reporting Requirements Under the SARA Section 313 (40 CFR 372): None

CERCLA Section 103 Reportable Quantity: None

California Proposition 65: This product contains crystalline silica (respirable) which is known to the State of California to cause cancer.

Toxic Substances Control Act: All of the components of this product are listed on the EPA TSCA Inventory or exempt from premanufacture notification requirements.

European Inventory of Commercial Chemical Substances: All of the components of this product are listed on the EINECS Inventory or exempt from notification requirements. (The EINECS number for Quartz: 238-878-4)

European Community Labeling: Harmful Xn
Contains crystalline silica, quartz (238-878-4)
R48/20 Harmful: Danger of serious damage to health by prolonged exposure by inhalation.
S22 Do not breathe dust
S38 In case of insufficient ventilation, wear suitable respiratory equipment.

Canadian Environmental Protection Act: All the components of this product are listed on the Canadian Domestic Substances List or exempt from notification requirements.

Canadian WHMIS Classification: Class D, Division 2, Subdivision A (Very Toxic Material causing other Toxic Effects)

This MSDS has been prepared according to the criteria of the Controlled Products Regulation (CPR) and the MSDS contains all of the information required by the CPR.

Japan MITI: All of the components of this product are existing chemical substances as defined in the Chemical Substance Control Law.

Australian Inventory of Chemical Substances: All of the components of this product are listed on the AICS inventory or exempt from notification requirements.

Korea: All of the components of this product are listed on the ECL inventory or exempt from notification requirements.

Philippines: All of the components of this product are listed on the PICCS inventory or exempt from notification requirements.

16: OTHER INFORMATION

EU Classes and Risk Phrases for Reference (See Sections 2 and 3)
Xn Harmful
R48/20 Harmful: Danger of serious damage to health by prolonged exposure by inhalation.
S22 Do not breathe dust
S38 In case of insufficient ventilation, wear suitable respiratory equipment.

NFPA Hazard Rating: Health: 1 Fire: 0 Reactivity: 0

HMIS Hazard Rating: Health: * Fire: 0 Reactivity: 0
* Warning - Chronic health effect possible - inhalation of silica dust may cause lung injury/disease (silicosis). Take appropriate measures to avoid breathing dust. See Section 3.

References:

Registry for Toxic Effects of Chemical Substances (RTECS), 2002
Patty's Industrial Hygiene and Toxicology
NIOSH Hazard Review -- Health Effects of Occupational Exposure to Respirable Crystalline Silica, April 2002
NTP Tenth Report on Carcinogens, 2002
IARC Monograph Volume 68, Silica, Some Silicates and Organic Fibres, 1997
Hazardous Substances Data Bank (HSDB), 2002

Revision Summary: Revised NIOSH Information (Section 2), Revised Hazards Identification (Section 3), Handling and Storage (Section 7). Revised Ventilation and Respiratory Protection (Section 8), Revised Health Hazard Data (Section 11). Revised Disposal Information (Section 13), Revised EINECS Number and EU Labeling. Added Korean and Philippine Inventory Status (Section 15).

The data in this Material Safety Data Sheet relates only to the specific material designated herein and does not relate to use in combination with any other material or in any process. The information set forth herein is based on technical data the Unimin Corporation believes reliable. It is intended for use by persons having technical skill and at their own discretion and risk. Since conditions of use are outside the control of Unimin Corporation, no warranties, expressed or implied, are made and no liability is assumed in connection with any use of this information. Any use of these data and information must be determined by the user to be in accordance with federal, state and local laws and regulations.

Date Prepared: August 2003

U.S. DEPARTMENT OF LABOR
Occupational Safety and Health Administration

Form Approved
OMB No. 44-R1381

MATERIAL SAFETY DATA SHEET

Required under USDL Safety and Health Regulations for Ship Repairing, Shipbuilding, and Shipbreaking (29 CFR 1915, 1916, 1917)

SECTION I

MANUFACTURER'S NAME: SASSOUNIAN INC.

ADDRESS (Number, Street, City, State, and ZIP Code): 416 S. Olive St. LA. CA 90014

EMERGENCY TELEPHONE NO.:

CHEMICAL NAME AND SYNONYMS:

CHEMICAL FAMILY: FATTY ACID + IRON OXIDE.

TRADE NAME AND SYNONYMS: RED ROUGE BAR

FORMULA: WAX BINDER + 99% PURE IRON OXIDE

SECTION II · HAZARDOUS INGREDIENTS

PAINTS, PRESERVATIVES, & SOLVENTS	%	TLV (Units)	ALLOYS AND METALLIC COATINGS	%	TLV (Units)
PIGMENTS			BASE METAL		
CATALYST N/A			ALLOYS N/A.		
VEHICLE			METALLIC COATINGS		
SOLVENTS			FILLER METAL PLUS COATING OR CORE FLUX		
ADDITIVES			OTHERS		
OTHERS					

HAZARDOUS MIXTURES OF OTHER LIQUIDS, SOLIDS, OR GASES

N/A

%	TLV (Units)

SECTION III · PHYSICAL DATA

BOILING POINT (°F.)	355°F	SPECIFIC GRAVITY (H_2O=1)	7.5
VAPOR PRESSURE (mm Hg.)	N/A	PERCENT, VOLATILE BY VOLUME (%)	N/A
VAPOR DENSITY (AIR=1)	N/A	EVAPORATION RATE (_____=1)	N/A
SOLUBILITY IN WATER	NEG		
APPEARANCE AND ODOR	RED SOLID BAR SLIGHT FATTY ODOR		

SECTION IV · FIRE AND EXPLOSION HAZARD DATA

FLASH POINT (Method used)	450°	FLAMMABLE LIMITS	LEL	UEL
EXTINGUISHING MEDIA	CO_2 FOAM			
SPECIAL FIRE FIGHTING PROCEDURES	DO NOT USE WATER			
UNUSUAL FIRE AND EXPLOSION HAZARDS				

SECTION V · HEALTH HAZARD DATA

THRESHOLD LIMIT VALUE N/A

EFFECTS OF OVEREXPOSURE N/A

EMERGENCY AND FIRST AID PROCEDURES FLUSH WITH WARM WATER

SECTION VI · REACTIVITY DATA

STABILITY			CONDITIONS TO AVOID AVOID EXTREME
	UNSTABLE		
	STABLE	✓	HEAT WILL MELT BAR

INCOMPATABILITY (Materials to avoid) NONE

HAZARDOUS DECOMPOSITION PRODUCTS NONE

HAZARDOUS POLYMERIZATION			CONDITIONS TO AVOID
	MAY OCCUR		
	WILL NOT OCCUR	✓	

SECTION VII · SPILL OR LEAK PROCEDURES

STEPS TO BE TAKEN IN CASE MATERIAL IS RELEASED OR SPILLED

SOLID BAR

WASTE DISPOSAL METHOD THROW AWAY IN REFUSE CAN

SECTION VIII · SPECIAL PROTECTION INFORMATION

RESPIRATORY PROTECTION (Specify type) FILTERED MASK

VENTILATION			
	LOCAL EXHAUST EXHAUST BLOWER	SPECIAL	
	MECHANICAL (General) SYSTEM.	OTHER VENT TO COLLECTOR	

PROTECTIVE GLOVES GLOVES NEEDED

EYE PROTECTION GLASSES NEEDED

OTHER PROTECTIVE EQUIPMENT NONE

SECTION IX · SPECIAL PRECAUTIONS

PRECAUTIONS TO BE TAKEN IN HANDLING AND STORING STORE AWAY FROM HEAT

OTHER PRECAUTIONS NONE

GPO 930-540

EXHIBIT 4
LABORATORY ANALYSIS RESULTS

TestAmerica

THE LEADER IN ENVIRONMENTAL TESTING

ANALYTICAL REPORT

TestAmerica Laboratories, Inc.
TestAmerica Irvine
17461 Derian Ave
Suite 100
Irvine, CA 92614-5817
Tel: (949)261-1022

TestAmerica Job ID: 440-134953-1
Client Project/Site: Atlas Precious Metals

For:
Ramboll Environ US Corporation
18100 Von Karman Avenue, Ste 600
Irvine, California 92612

Attn: Renee VanDeGriend

Authorized for release by:
1/20/2016 9:06:23 AM

Patty Mata, Senior Project Manager
(949)261-1022
patty.mata@testamericainc.com

LINKS

Review your project results through TotalAccess

Have a Question? Ask The Expert

Visit us at: www.testamericainc.com

The test results in this report meet all 2003 NELAC and 2009 TNI requirements for accredited parameters, exceptions are noted in this report. This report may not be reproduced except in full, and with written approval from the laboratory. For questions please contact the Project Manager at the e-mail address or telephone number listed on this page.

This report has been electronically signed and authorized by the signatory. Electronic signature is intended to be the legally binding equivalent of a traditionally handwritten signature.

Results relate only to the items tested and the sample(s) as received by the laboratory.

Table of Contents

Cover Page 1
Table of Contents 2
Sample Summary 3
Case Narrative 4
Client Sample Results 5
Method Summary 7
Lab Chronicle 8
QC Sample Results 9
QC Association Summary 15
Definitions/Glossary 17
Certification Summary 18
Chain of Custody 19
Receipt Checklists 23

Sample Summary

Client: Ramboll Environ US Corporation
Project/Site: Atlas Precious Metals

TestAmerica Job ID: 440-134953-1

Lab Sample ID	Client Sample ID	Matrix	Collected	Received
440-134953-1	METAL SWEEPS #1	Solid	01/13/16 00:01	01/13/16 15:57
440-134953-2	METAL SWEEPS #2	Solid	01/13/16 00:01	01/13/16 15:57
440-134953-3	METAL SWEEPS #1	Solid	01/13/16 00:01	01/13/16 15:57

Job ID: 440-134953-1

Laboratory: TestAmerica Irvine

Narrative

Job Narrative
440-134953-1

Comments
No additional comments.

Receipt
The samples were received on 1/13/2016 3:57 PM; the samples arrived in good condition, properly preserved and, where required, on ice. The temperature of the cooler at receipt was 22.3º C. Additional sample weight for METAL SWEEPS #1 was received on 1/14/16.

Receipt Exceptions
Insufficient sample weight for METAL SWEEPS #1 (440-134953-1) was received. The TCLP tests were started but there was not enough sample remaining to perform the total metals tests. Client was contacted and they provided additional sample weight on 1/14/16 to analyze the total metals.

Tests were changed to 5-day rush TAT per client's 1/14/16 email.

The following samples were received at the laboratory without a sample collection date or time documented on the chain of custody: METAL SWEEPS #1 (440-134953-1), METAL SWEEPS #2 (440-134953-2) and METAL SWEEPS #1 (440-134953-3). The samples were logged using the date the COC was relinquished as the collection date, and a default collection time of 00:01.

Metals
Method(s) 6010B: The continuing calibration blank (CCB) for analytical batch 440-305855 contained Copper above the reporting limit (RL). The following sample associated with this CCB contained this analyte at a concentration greater than 10X the value found in the CCB; therefore, re-analysis of samples was not performed: METAL SWEEPS #2 (440-134953-2).

Method(s) 6010B: The following sample was diluted due to the nature of the sample matrix: METAL SWEEPS #2 (440-134953-2). Elevated reporting limits (RLs) are provided.

Method(s) 6010B: The following sample was diluted due to the nature of the sample matrix: METAL SWEEPS #1 (440-134953-3). Elevated reporting limits (RLs) are provided.

No additional analytical or quality issues were noted, other than those described above or in the Definitions/Glossary page.

Organic Prep
No analytical or quality issues were noted, other than those described in the Definitions/Glossary page.

Client Sample Results

Client: Ramboll Environ US Corporation
Project/Site: Atlas Precious Metals

TestAmerica Job ID: 440-134953-1

Client Sample ID: METAL SWEEPS #1

Lab Sample ID: 440-134953-1
Date Collected: 01/13/16 00:01
Matrix: Solid
Date Received: 01/13/16 15:57

Method: 6010B - Metals (ICP) - TCLP

Analyte	Result	Qualifier	RL	Unit	D	Prepared	Analyzed	Dil Fac
Arsenic	ND		0.20	mg/L		01/14/16 15:08	01/15/16 10:30	1
Barium	**1.0**		0.20	mg/L		01/14/16 15:08	01/15/16 10:30	1
Cadmium	ND		0.10	mg/L		01/14/16 15:08	01/15/16 10:30	1
Chromium	**13**		0.10	mg/L		01/14/16 15:08	01/15/16 10:30	1
Lead	ND		0.10	mg/L		01/14/16 15:08	01/15/16 10:30	1
Selenium	**0.33**		0.10	mg/L		01/14/16 15:08	01/15/16 10:30	1
Silver	ND		0.20	mg/L		01/14/16 15:08	01/15/16 10:30	1

Method: 7470A - Mercury (CVAA) - TCLP

Analyte	Result	Qualifier	RL	Unit	D	Prepared	Analyzed	Dil Fac
Mercury	ND		0.0020	mg/L		01/15/16 10:43	01/15/16 16:25	1

Client Sample ID: METAL SWEEPS #2

Lab Sample ID: 440-134953-2
Date Collected: 01/13/16 00:01
Matrix: Solid
Date Received: 01/13/16 15:57

Method: 6010B - Metals (ICP)

Analyte	Result	Qualifier	RL	Unit	D	Prepared	Analyzed	Dil Fac
Antimony	ND		110	mg/Kg		01/14/16 08:22	01/14/16 17:52	50
Arsenic	ND		34	mg/Kg		01/14/16 08:22	01/14/16 17:52	50
Barium	**790**		17	mg/Kg		01/14/16 08:22	01/14/16 17:52	50
Beryllium	ND		5.6	mg/Kg		01/14/16 08:22	01/14/16 17:52	50
Cadmium	ND		5.6	mg/Kg		01/14/16 08:22	01/14/16 17:52	50
Chromium	**400**		11	mg/Kg		01/14/16 08:22	01/14/16 17:52	50
Cobalt	**73**		11	mg/Kg		01/14/16 08:22	01/14/16 17:52	50
Copper	**35000**	^	22	mg/Kg		01/14/16 08:22	01/14/16 17:52	50
Lead	**77**		22	mg/Kg		01/14/16 08:22	01/14/16 17:52	50
Molybdenum	**100**		22	mg/Kg		01/14/16 08:22	01/14/16 17:52	50
Nickel	**4200**		22	mg/Kg		01/14/16 08:22	01/14/16 17:52	50
Selenium	ND		34	mg/Kg		01/14/16 08:22	01/14/16 17:52	50
Thallium	ND		110	mg/Kg		01/14/16 08:22	01/14/16 17:52	50
Vanadium	**39**		11	mg/Kg		01/14/16 08:22	01/14/16 17:52	50
Zinc	**8600**		56	mg/Kg		01/14/16 08:22	01/14/16 17:52	50
Silver	**570**		17	mg/Kg		01/14/16 08:22	01/14/16 17:52	50

Method: 7471A - Mercury (CVAA)

Analyte	Result	Qualifier	RL	Unit	D	Prepared	Analyzed	Dil Fac
Mercury	**0.097**		0.020	mg/Kg		01/14/16 13:10	01/14/16 21:47	1

Client Sample ID: METAL SWEEPS #1

Lab Sample ID: 440-134953-3
Date Collected: 01/13/16 00:01
Matrix: Solid
Date Received: 01/13/16 15:57

Method: 6010B - Metals (ICP)

Analyte	Result	Qualifier	RL	Unit	D	Prepared	Analyzed	Dil Fac
Antimony	ND		50	mg/Kg		01/15/16 08:12	01/15/16 16:39	25
Arsenic	**34**		15	mg/Kg		01/15/16 08:12	01/15/16 16:39	25
Barium	**700**		7.5	mg/Kg		01/15/16 08:12	01/15/16 16:39	25
Beryllium	**5.1**		2.5	mg/Kg		01/15/16 08:12	01/15/16 16:39	25
Cadmium	**100**		2.5	mg/Kg		01/15/16 08:12	01/15/16 16:39	25

Client Sample Results

Client: Ramboll Environ US Corporation
Project/Site: Atlas Precious Metals

TestAmerica Job ID: 440-134953-1

Client Sample ID: METAL SWEEPS #1

Lab Sample ID: 440-134953-3

Date Collected: 01/13/16 00:01
Matrix: Solid
Date Received: 01/13/16 15:57

Method: 6010B - Metals (ICP) (Continued)

Analyte	Result	Qualifier	RL		Unit	D	Prepared	Analyzed	Dil Fac
Chromium	580		5.0		mg/Kg		01/15/16 08:12	01/15/16 16:39	25
Cobalt	28		5.0		mg/Kg		01/15/16 08:12	01/15/16 16:39	25
Copper	8200		10		mg/Kg		01/15/16 08:12	01/15/16 16:39	25
Lead	480		10		mg/Kg		01/15/16 08:12	01/15/16 16:39	25
Molybdenum	65		10		mg/Kg		01/15/16 08:12	01/15/16 16:39	25
Nickel	710		10		mg/Kg		01/15/16 08:12	01/15/16 16:39	25
Selenium	ND		15		mg/Kg		01/15/16 08:12	01/15/16 16:39	25
Thallium	ND		50		mg/Kg		01/15/16 08:12	01/15/16 16:39	25
Vanadium	33		5.0		mg/Kg		01/15/16 08:12	01/15/16 16:39	25
Zinc	4900		25		mg/Kg		01/15/16 08:12	01/15/16 16:39	25
Silver	500		7.5		mg/Kg		01/15/16 08:12	01/15/16 16:39	25

Method: 7471A - Mercury (CVAA)

Analyte	Result	Qualifier	RL		Unit	D	Prepared	Analyzed	Dil Fac
Mercury	0.15		0.020		mg/Kg		01/14/16 13:10	01/14/16 21:45	1

Method Summary

Client: Ramboll Environ US Corporation
Project/Site: Atlas Precious Metals

TestAmerica Job ID: 440-134953-1

Method	Method Description	Protocol	Laboratory
6010B	Metals (ICP)	SW846	TAL IRV
7470A	Mercury (CVAA)	SW846	TAL IRV
7471A	Mercury (CVAA)	SW846	TAL IRV

Protocol References:

SW846 = "Test Methods For Evaluating Solid Waste, Physical/Chemical Methods", Third Edition, November 1986 And Its Updates.

Laboratory References:

TAL IRV = TestAmerica Irvine, 17461 Derian Ave, Suite 100, Irvine, CA 92614-5817, TEL (949)261-1022

Lab Chronicle

Client: Ramboll Environ US Corporation
Project/Site: Atlas Precious Metals

TestAmerica Job ID: 440-134953-1

Client Sample ID: METAL SWEEPS #1 — Lab Sample ID: 440-134953-1

Date Collected: 01/13/16 00:01 — **Matrix: Solid**
Date Received: 01/13/16 15:57

Prep Type	Batch Type	Batch Method	Run	Dil Factor	Initial Amount	Final Amount	Batch Number	Prepared or Analyzed	Analyst	Lab
TCLP	Leach	1311			100.02 g	2000 mL	305569	01/13/16 22:37	CH	TAL IRV
TCLP	Prep	3010A			5 mL	50 mL	305757	01/14/16 15:08	EN	TAL IRV
TCLP	Analysis	6010B		1	5 mL	50 mL	306002	01/15/16 10:30	DP	TAL IRV
TCLP	Leach	1311			100.02 g	2000 mL	305569	01/13/16 22:37	CH	TAL IRV
TCLP	Prep	7470A			2 mL	20 mL	305992	01/15/16 10:43	DB	TAL IRV
TCLP	Analysis	7470A		1	2 mL	20 mL	306138	01/15/16 16:25	DB	TAL IRV

Client Sample ID: METAL SWEEPS #2 — Lab Sample ID: 440-134953-2

Date Collected: 01/13/16 00:01 — **Matrix: Solid**
Date Received: 01/13/16 15:57

Prep Type	Batch Type	Batch Method	Run	Dil Factor	Initial Amount	Final Amount	Batch Number	Prepared or Analyzed	Analyst	Lab
Total/NA	Prep	3050B			0.89 g	25 mL	305624	01/14/16 08:22	DT	TAL IRV
Total/NA	Analysis	6010B		50	0.89 g	25 mL	305855	01/14/16 17:52	EN	TAL IRV
Total/NA	Prep	7471A			0.50 g	50 mL	305722	01/14/16 13:10	DB	TAL IRV
Total/NA	Analysis	7471A		1	0.50 g	50 mL	305984	01/14/16 21:47	DB	TAL IRV

Client Sample ID: METAL SWEEPS #1 — Lab Sample ID: 440-134953-3

Date Collected: 01/13/16 00:01 — **Matrix: Solid**
Date Received: 01/13/16 15:57

Prep Type	Batch Type	Batch Method	Run	Dil Factor	Initial Amount	Final Amount	Batch Number	Prepared or Analyzed	Analyst	Lab
Total/NA	Prep	3050B			2.00 g	50 mL	305943	01/15/16 08:12	DT	TAL IRV
Total/NA	Analysis	6010B		25	2.00 g	50 mL	306121	01/15/16 16:39	EN	TAL IRV
Total/NA	Prep	7471A			0.51 g	50 mL	305722	01/14/16 13:10	DB	TAL IRV
Total/NA	Analysis	7471A		1	0.51 g	50 mL	305984	01/14/16 21:45	DB	TAL IRV

Laboratory References:

TAL IRV = TestAmerica Irvine, 17461 Derian Ave, Suite 100, Irvine, CA 92614-5817, TEL (949)261-1022

QC Sample Results

Client: Ramboll Environ US Corporation
Project/Site: Atlas Precious Metals

TestAmerica Job ID: 440-134953-1

Method: 6010B - Metals (ICP)

Lab Sample ID: MB 440-305624/1-A ^5
Matrix: Solid
Analysis Batch: 305855

Client Sample ID: Method Blank
Prep Type: Total/NA
Prep Batch: 305624

Analyte	MB Result	MB Qualifier	RL	Unit	D	Prepared	Analyzed	Dil Fac
Antimony	ND		9.8	mg/Kg		01/14/16 08:22	01/14/16 16:59	5
Arsenic	ND		2.9	mg/Kg		01/14/16 08:22	01/14/16 16:59	5
Barium	ND		1.5	mg/Kg		01/14/16 08:22	01/14/16 16:59	5
Beryllium	ND		0.49	mg/Kg		01/14/16 08:22	01/14/16 16:59	5
Cadmium	ND		0.49	mg/Kg		01/14/16 08:22	01/14/16 16:59	5
Chromium	ND		0.98	mg/Kg		01/14/16 08:22	01/14/16 16:59	5
Cobalt	ND		0.98	mg/Kg		01/14/16 08:22	01/14/16 16:59	5
Copper	ND		2.0	mg/Kg		01/14/16 08:22	01/14/16 16:59	5
Lead	ND		2.0	mg/Kg		01/14/16 08:22	01/14/16 16:59	5
Molybdenum	ND		2.0	mg/Kg		01/14/16 08:22	01/14/16 16:59	5
Nickel	ND		2.0	mg/Kg		01/14/16 08:22	01/14/16 16:59	5
Selenium	ND		2.9	mg/Kg		01/14/16 08:22	01/14/16 16:59	5
Thallium	ND		9.8	mg/Kg		01/14/16 08:22	01/14/16 16:59	5
Vanadium	ND		0.98	mg/Kg		01/14/16 08:22	01/14/16 16:59	5
Zinc	ND		4.9	mg/Kg		01/14/16 08:22	01/14/16 16:59	5
Silver	ND		1.5	mg/Kg		01/14/16 08:22	01/14/16 16:59	5

Lab Sample ID: LCS 440-305624/2-A ^5
Matrix: Solid
Analysis Batch: 305855

Client Sample ID: Lab Control Sample
Prep Type: Total/NA
Prep Batch: 305624

Analyte	Spike Added	LCS Result	LCS Qualifier	Unit	D	%Rec	%Rec. Limits
Antimony	49.5	52.8		mg/Kg		107	80 - 120
Arsenic	49.5	50.2		mg/Kg		101	80 - 120
Barium	49.5	51.0		mg/Kg		103	80 - 120
Beryllium	49.5	50.0		mg/Kg		101	80 - 120
Cadmium	49.5	48.6		mg/Kg		98	80 - 120
Chromium	49.5	47.4		mg/Kg		96	80 - 120
Cobalt	49.5	52.1		mg/Kg		105	80 - 120
Copper	49.5	51.2		mg/Kg		103	80 - 120
Lead	49.5	50.5		mg/Kg		102	80 - 120
Molybdenum	49.5	52.6		mg/Kg		106	80 - 120
Nickel	49.5	51.7		mg/Kg		104	80 - 120
Selenium	49.5	44.6		mg/Kg		90	80 - 120
Thallium	49.5	49.1		mg/Kg		99	80 - 120
Vanadium	49.5	51.1		mg/Kg		103	80 - 120
Zinc	49.5	48.0		mg/Kg		97	80 - 120
Silver	24.8	25.1		mg/Kg		101	80 - 120

Lab Sample ID: 440-134893-A-1-C MS ^5
Matrix: Solid
Analysis Batch: 305855

Client Sample ID: Matrix Spike
Prep Type: Total/NA
Prep Batch: 305624

Analyte	Sample Result	Sample Qualifier	Spike Added	MS Result	MS Qualifier	Unit	D	%Rec	%Rec. Limits
Antimony	ND		50.0	50.9		mg/Kg		102	75 - 125
Arsenic	3.5	F1	50.0	70.1	F1	mg/Kg		133	75 - 125
Barium	61	F1	50.0	144	F1	mg/Kg		167	75 - 125
Beryllium	ND	F1	50.0	67.3	F1	mg/Kg		134	75 - 125

Method: 6010B - Metals (ICP) (Continued)

Lab Sample ID: 440-134893-A-1-C MS ^5 — **Client Sample ID: Matrix Spike**
Matrix: Solid — **Prep Type: Total/NA**
Analysis Batch: 305855 — **Prep Batch: 305624**

Analyte	Sample Result	Sample Qualifier	Spike Added	MS Result	MS Qualifier	Unit	D	%Rec	%Rec. Limits
Cadmium	ND	F1	50.0	63.5	F1	mg/Kg		127	75 - 125
Chromium	12	F1	50.0	83.7	F1	mg/Kg		143	75 - 125
Cobalt	4.1	F1	50.0	72.0	F1	mg/Kg		136	75 - 125
Copper	16	F1	50.0	88.8	F1	mg/Kg		146	75 - 125
Lead	45	F1	50.0	113	F1	mg/Kg		135	75 - 125
Molybdenum	ND	F1	50.0	69.5	F1	mg/Kg		139	75 - 125
Nickel	9.4	F1	50.0	79.2	F1	mg/Kg		140	75 - 125
Selenium	ND		50.0	59.2		mg/Kg		118	75 - 125
Thallium	ND	F1	50.0	64.3	F1	mg/Kg		129	75 - 125
Vanadium	22	F1	50.0	96.6	F1	mg/Kg		149	75 - 125
Zinc	70	F1	50.0	144	F1	mg/Kg		147	75 - 125
Silver	ND	F1	25.0	33.4	F1	mg/Kg		134	75 - 125

Lab Sample ID: 440-134893-A-1-D MSD ^5 — **Client Sample ID: Matrix Spike Duplicate**
Matrix: Solid — **Prep Type: Total/NA**
Analysis Batch: 305855 — **Prep Batch: 305624**

Analyte	Sample Result	Sample Qualifier	Spike Added	MSD Result	MSD Qualifier	Unit	D	%Rec	%Rec. Limits	RPD	RPD Limit
Antimony	ND		50.0	48.5		mg/Kg		97	75 - 125	5	20
Arsenic	3.5	F1	50.0	66.8	F1	mg/Kg		126	75 - 125	5	20
Barium	61	F1	50.0	138	F1	mg/Kg		154	75 - 125	5	20
Beryllium	ND	F1	50.0	63.3	F1	mg/Kg		126	75 - 125	6	20
Cadmium	ND	F1	50.0	59.7		mg/Kg		119	75 - 125	6	20
Chromium	12	F1	50.0	76.5	F1	mg/Kg		128	75 - 125	9	20
Cobalt	4.1	F1	50.0	67.3	F1	mg/Kg		126	75 - 125	7	20
Copper	16	F1	50.0	84.4	F1	mg/Kg		138	75 - 125	5	20
Lead	45	F1	50.0	98.3		mg/Kg		107	75 - 125	14	20
Molybdenum	ND	F1	50.0	65.3	F1	mg/Kg		131	75 - 125	6	20
Nickel	9.4	F1	50.0	73.0	F1	mg/Kg		127	75 - 125	8	20
Selenium	ND		50.0	56.2		mg/Kg		112	75 - 125	5	20
Thallium	ND	F1	50.0	61.0		mg/Kg		122	75 - 125	5	20
Vanadium	22	F1	50.0	90.8	F1	mg/Kg		138	75 - 125	6	20
Zinc	70	F1	50.0	129		mg/Kg		118	75 - 125	10	20
Silver	ND	F1	25.0	31.7	F1	mg/Kg		127	75 - 125	5	20

Lab Sample ID: MB 440-305943/1-A ^5 — **Client Sample ID: Method Blank**
Matrix: Solid — **Prep Type: Total/NA**
Analysis Batch: 306121 — **Prep Batch: 305943**

Analyte	MB Result	MB Qualifier	RL	Unit	D	Prepared	Analyzed	Dil Fac
Antimony	ND		9.9	mg/Kg		01/15/16 08:12	01/15/16 15:17	5
Arsenic	ND		3.0	mg/Kg		01/15/16 08:12	01/15/16 15:17	5
Barium	ND		1.5	mg/Kg		01/15/16 08:12	01/15/16 15:17	5
Beryllium	ND		0.50	mg/Kg		01/15/16 08:12	01/15/16 15:17	5
Cadmium	ND		0.50	mg/Kg		01/15/16 08:12	01/15/16 15:17	5
Chromium	ND		0.99	mg/Kg		01/15/16 08:12	01/15/16 15:17	5
Cobalt	ND		0.99	mg/Kg		01/15/16 08:12	01/15/16 15:17	5
Copper	ND		2.0	mg/Kg		01/15/16 08:12	01/15/16 15:17	5
Lead	ND		2.0	mg/Kg		01/15/16 08:12	01/15/16 15:17	5

Method: 6010B - Metals (ICP) (Continued)

Lab Sample ID: MB 440-305943/1-A ^5 — **Client Sample ID: Method Blank**
Matrix: Solid — **Prep Type: Total/NA**
Analysis Batch: 306121 — **Prep Batch: 305943**

Analyte	MB Result	MB Qualifier	RL	Unit	D	Prepared	Analyzed	Dil Fac
Molybdenum	ND		2.0	mg/Kg		01/15/16 08:12	01/15/16 15:17	5
Nickel	ND		2.0	mg/Kg		01/15/16 08:12	01/15/16 15:17	5
Selenium	ND		3.0	mg/Kg		01/15/16 08:12	01/15/16 15:17	5
Thallium	ND		9.9	mg/Kg		01/15/16 08:12	01/15/16 15:17	5
Vanadium	ND		0.99	mg/Kg		01/15/16 08:12	01/15/16 15:17	5
Zinc	ND		5.0	mg/Kg		01/15/16 08:12	01/15/16 15:17	5
Silver	ND		1.5	mg/Kg		01/15/16 08:12	01/15/16 15:17	5

Lab Sample ID: LCS 440-305943/2-A ^5 — **Client Sample ID: Lab Control Sample**
Matrix: Solid — **Prep Type: Total/NA**
Analysis Batch: 306121 — **Prep Batch: 305943**

Analyte	Spike Added	LCS Result	LCS Qualifier	Unit	D	%Rec	%Rec. Limits
Antimony	49.8	51.3		mg/Kg		103	80 - 120
Arsenic	49.8	48.1		mg/Kg		97	80 - 120
Barium	49.8	49.9		mg/Kg		100	80 - 120
Beryllium	49.8	47.8		mg/Kg		96	80 - 120
Cadmium	49.8	47.7		mg/Kg		96	80 - 120
Chromium	49.8	46.2		mg/Kg		93	80 - 120
Cobalt	49.8	50.6		mg/Kg		102	80 - 120
Copper	49.8	49.4		mg/Kg		99	80 - 120
Lead	49.8	49.3		mg/Kg		99	80 - 120
Molybdenum	49.8	50.8		mg/Kg		102	80 - 120
Nickel	49.8	50.1		mg/Kg		101	80 - 120
Selenium	49.8	43.7		mg/Kg		88	80 - 120
Thallium	49.8	48.2		mg/Kg		97	80 - 120
Vanadium	49.8	49.4		mg/Kg		99	80 - 120
Zinc	49.8	46.5		mg/Kg		93	80 - 120
Silver	24.9	24.6		mg/Kg		99	80 - 120

Lab Sample ID: 440-135041-H-1-E MS ^5 — **Client Sample ID: Matrix Spike**
Matrix: Solid — **Prep Type: Total/NA**
Analysis Batch: 306121 — **Prep Batch: 305943**

Analyte	Sample Result	Sample Qualifier	Spike Added	MS Result	MS Qualifier	Unit	D	%Rec	%Rec. Limits
Antimony	ND		49.5	53.1		mg/Kg		107	75 - 125
Arsenic	8.0	F1	49.5	71.2	F1	mg/Kg		128	75 - 125
Barium	210		49.5	292	4	mg/Kg		174	75 - 125
Beryllium	0.73	F1	49.5	62.4		mg/Kg		124	75 - 125
Cadmium	0.58		49.5	58.8		mg/Kg		118	75 - 125
Chromium	29		49.5	88.1		mg/Kg		119	75 - 125
Cobalt	10	F1	49.5	70.6		mg/Kg		123	75 - 125
Copper	71	F1	49.5	150	F1	mg/Kg		158	75 - 125
Lead	76		49.5	135		mg/Kg		119	75 - 125
Molybdenum	14	F1	49.5	78.0	F1	mg/Kg		130	75 - 125
Nickel	30		49.5	89.3		mg/Kg		120	75 - 125
Selenium	ND		49.5	57.1		mg/Kg		115	75 - 125
Thallium	ND		49.5	57.2		mg/Kg		116	75 - 125
Vanadium	73	F1	49.5	141	F1	mg/Kg		137	75 - 125

Method: 6010B - Metals (ICP) (Continued)

Lab Sample ID: 440-135041-H-1-E MS ^5
Matrix: Solid
Analysis Batch: 306121

Client Sample ID: Matrix Spike
Prep Type: Total/NA
Prep Batch: 305943

Analyte	Sample Result	Sample Qualifier	Spike Added	MS Result	MS Qualifier	Unit	D	%Rec	%Rec. Limits
Zinc	120	F1	49.5	190	F1	mg/Kg		134	75 - 125
Silver	ND	F1	24.8	33.6	F1	mg/Kg		136	75 - 125

Lab Sample ID: 440-135041-H-1-F MSD ^5
Matrix: Solid
Analysis Batch: 306121

Client Sample ID: Matrix Spike Duplicate
Prep Type: Total/NA
Prep Batch: 305943

Analyte	Sample Result	Sample Qualifier	Spike Added	MSD Result	MSD Qualifier	Unit	D	%Rec	%Rec. Limits	RPD	RPD Limit
Antimony	ND		49.5	55.8		mg/Kg		113	75 - 125	5	20
Arsenic	8.0	F1	49.5	72.5	F1	mg/Kg		130	75 - 125	2	20
Barium	210		49.5	259	4	mg/Kg		107	75 - 125	12	20
Beryllium	0.73	F1	49.5	63.7	F1	mg/Kg		127	75 - 125	2	20
Cadmium	0.58		49.5	62.4		mg/Kg		125	75 - 125	6	20
Chromium	29		49.5	85.8		mg/Kg		114	75 - 125	3	20
Cobalt	10	F1	49.5	72.5	F1	mg/Kg		126	75 - 125	3	20
Copper	71	F1	49.5	135	F1	mg/Kg		129	75 - 125	10	20
Lead	76		49.5	126		mg/Kg		102	75 - 125	7	20
Molybdenum	14	F1	49.5	80.6	F1	mg/Kg		135	75 - 125	3	20
Nickel	30		49.5	88.1		mg/Kg		117	75 - 125	1	20
Selenium	ND		49.5	58.0		mg/Kg		117	75 - 125	2	20
Thallium	ND		49.5	60.5		mg/Kg		122	75 - 125	6	20
Vanadium	73	F1	49.5	132		mg/Kg		118	75 - 125	7	20
Zinc	120	F1	49.5	156	F1	mg/Kg		67	75 - 125	19	20
Silver	ND	F1	24.8	34.3	F1	mg/Kg		139	75 - 125	2	20

Lab Sample ID: MB 440-305569/1-B
Matrix: Solid
Analysis Batch: 306002

Client Sample ID: Method Blank
Prep Type: TCLP
Prep Batch: 305757

Analyte	MB Result	MB Qualifier	RL	Unit	D	Prepared	Analyzed	Dil Fac
Arsenic	ND		0.20	mg/L		01/14/16 15:08	01/15/16 10:25	1
Barium	ND		0.20	mg/L		01/14/16 15:08	01/15/16 10:25	1
Cadmium	ND		0.10	mg/L		01/14/16 15:08	01/15/16 10:25	1
Chromium	ND		0.10	mg/L		01/14/16 15:08	01/15/16 10:25	1
Lead	ND		0.10	mg/L		01/14/16 15:08	01/15/16 10:25	1
Selenium	ND		0.10	mg/L		01/14/16 15:08	01/15/16 10:25	1
Silver	ND		0.20	mg/L		01/14/16 15:08	01/15/16 10:25	1

Lab Sample ID: LCS 440-305569/2-B
Matrix: Solid
Analysis Batch: 306002

Client Sample ID: Lab Control Sample
Prep Type: TCLP
Prep Batch: 305757

Analyte	Spike Added	LCS Result	LCS Qualifier	Unit	D	%Rec	%Rec. Limits
Arsenic	2.00	2.05		mg/L		102	80 - 120
Barium	2.00	2.23		mg/L		112	80 - 120
Cadmium	2.00	2.01		mg/L		100	80 - 120
Chromium	2.00	2.04		mg/L		102	80 - 120
Lead	2.00	2.02		mg/L		101	80 - 120
Selenium	2.00	1.88		mg/L		94	80 - 120

Method: 6010B - Metals (ICP) (Continued)

Lab Sample ID: LCS 440-305569/2-B — **Client Sample ID: Lab Control Sample**
Matrix: Solid — **Prep Type: TCLP**
Analysis Batch: 306002 — **Prep Batch: 305757**

Analyte	Spike Added	LCS Result	LCS Qualifier	Unit	D	%Rec	%Rec. Limits
Silver	1.00	1.03		mg/L		103	80 - 120

Lab Sample ID: 440-134953-1 MS — **Client Sample ID: METAL SWEEPS #1**
Matrix: Solid — **Prep Type: TCLP**
Analysis Batch: 306002 — **Prep Batch: 305757**

Analyte	Sample Result	Sample Qualifier	Spike Added	MS Result	MS Qualifier	Unit	D	%Rec	%Rec. Limits
Arsenic	ND		2.00	2.02		mg/L		101	75 - 125
Barium	1.0		2.00	3.04		mg/L		101	75 - 125
Cadmium	ND		2.00	1.94		mg/L		97	75 - 125
Chromium	13		2.00	14.8	4	mg/L		98	75 - 125
Lead	ND		2.00	2.10		mg/L		105	75 - 125
Selenium	0.33		2.00	2.14		mg/L		90	75 - 125
Silver	ND		1.00	1.05		mg/L		105	75 - 125

Method: 7470A - Mercury (CVAA)

Lab Sample ID: MB 440-305569/1-C — **Client Sample ID: Method Blank**
Matrix: Solid — **Prep Type: TCLP**
Analysis Batch: 306138 — **Prep Batch: 305992**

Analyte	MB Result	MB Qualifier	RL	Unit	D	Prepared	Analyzed	Dil Fac
Mercury	ND		0.0020	mg/L		01/15/16 10:43	01/15/16 16:20	1

Lab Sample ID: LCS 440-305569/2-C — **Client Sample ID: Lab Control Sample**
Matrix: Solid — **Prep Type: TCLP**
Analysis Batch: 306138 — **Prep Batch: 305992**

Analyte	Spike Added	LCS Result	LCS Qualifier	Unit	D	%Rec	%Rec. Limits
Mercury	0.0800	0.0839		mg/L		105	80 - 120

Lab Sample ID: 440-134953-1 MS — **Client Sample ID: METAL SWEEPS #1**
Matrix: Solid — **Prep Type: TCLP**
Analysis Batch: 306138 — **Prep Batch: 305992**

Analyte	Sample Result	Sample Qualifier	Spike Added	MS Result	MS Qualifier	Unit	D	%Rec	%Rec. Limits
Mercury	ND		0.0800	0.0836		mg/L		105	70 - 130

Lab Sample ID: 440-134953-1 MSD — **Client Sample ID: METAL SWEEPS #1**
Matrix: Solid — **Prep Type: TCLP**
Analysis Batch: 306138 — **Prep Batch: 305992**

Analyte	Sample Result	Sample Qualifier	Spike Added	MSD Result	MSD Qualifier	Unit	D	%Rec	%Rec. Limits	RPD	RPD Limit
Mercury	ND		0.0800	0.0824		mg/L		103	70 - 130	1	20

QC Sample Results

Client: Ramboll Environ US Corporation
Project/Site: Atlas Precious Metals

TestAmerica Job ID: 440-134953-1

Method: 7471A - Mercury (CVAA)

Lab Sample ID: MB 440-305722/1-A
Matrix: Solid
Analysis Batch: 305984

Client Sample ID: Method Blank
Prep Type: Total/NA
Prep Batch: 305722

Analyte	MB Result	MB Qualifier	RL		Unit	D	Prepared	Analyzed	Dil Fac
Mercury	ND		0.020		mg/Kg		01/14/16 13:10	01/14/16 21:20	1

Lab Sample ID: LCS 440-305722/2-A
Matrix: Solid
Analysis Batch: 305984

Client Sample ID: Lab Control Sample
Prep Type: Total/NA
Prep Batch: 305722

Analyte			Spike Added	LCS Result	LCS Qualifier	Unit	D	%Rec	%Rec. Limits		
Mercury			0.800	0.806		mg/Kg		101	80 - 120		

Lab Sample ID: 440-134836-A-1-G MS
Matrix: Solid
Analysis Batch: 305984

Client Sample ID: Matrix Spike
Prep Type: Total/NA
Prep Batch: 305722

Analyte	Sample Result	Sample Qualifier	Spike Added	MS Result	MS Qualifier	Unit	D	%Rec	%Rec. Limits		
Mercury	0.048		0.784	0.701		mg/Kg		83	70 - 130		

Lab Sample ID: 440-134836-A-1-H MSD
Matrix: Solid
Analysis Batch: 305984

Client Sample ID: Matrix Spike Duplicate
Prep Type: Total/NA
Prep Batch: 305722

Analyte	Sample Result	Sample Qualifier	Spike Added	MSD Result	MSD Qualifier	Unit	D	%Rec	%Rec. Limits	RPD	RPD Limit
Mercury	0.048		0.800	0.835		mg/Kg		98	70 - 130	17	20

QC Association Summary

Client: Ramboll Environ US Corporation
Project/Site: Atlas Precious Metals

TestAmerica Job ID: 440-134953-1

Metals

Leach Batch: 305569

Lab Sample ID	Client Sample ID	Prep Type	Matrix	Method	Prep Batch
440-134953-1	METAL SWEEPS #1	TCLP	Solid	1311	
440-134953-1 MS	METAL SWEEPS #1	TCLP	Solid	1311	
440-134953-1 MSD	METAL SWEEPS #1	TCLP	Solid	1311	
LCS 440-305569/2-B	Lab Control Sample	TCLP	Solid	1311	
LCS 440-305569/2-C	Lab Control Sample	TCLP	Solid	1311	
MB 440-305569/1-B	Method Blank	TCLP	Solid	1311	
MB 440-305569/1-C	Method Blank	TCLP	Solid	1311	

Prep Batch: 305624

Lab Sample ID	Client Sample ID	Prep Type	Matrix	Method	Prep Batch
440-134893-A-1-C MS ^5	Matrix Spike	Total/NA	Solid	3050B	
440-134893-A-1-D MSD ^5	Matrix Spike Duplicate	Total/NA	Solid	3050B	
440-134953-2	METAL SWEEPS #2	Total/NA	Solid	3050B	
LCS 440-305624/2-A ^5	Lab Control Sample	Total/NA	Solid	3050B	
MB 440-305624/1-A ^5	Method Blank	Total/NA	Solid	3050B	

Prep Batch: 305722

Lab Sample ID	Client Sample ID	Prep Type	Matrix	Method	Prep Batch
440-134836-A-1-G MS	Matrix Spike	Total/NA	Solid	7471A	
440-134836-A-1-H MSD	Matrix Spike Duplicate	Total/NA	Solid	7471A	
440-134953-2	METAL SWEEPS #2	Total/NA	Solid	7471A	
440-134953-3	METAL SWEEPS #1	Total/NA	Solid	7471A	
LCS 440-305722/2-A	Lab Control Sample	Total/NA	Solid	7471A	
MB 440-305722/1-A	Method Blank	Total/NA	Solid	7471A	

Prep Batch: 305757

Lab Sample ID	Client Sample ID	Prep Type	Matrix	Method	Prep Batch
440-134953-1	METAL SWEEPS #1	TCLP	Solid	3010A	305569
440-134953-1 MS	METAL SWEEPS #1	TCLP	Solid	3010A	305569
LCS 440-305569/2-B	Lab Control Sample	TCLP	Solid	3010A	305569
MB 440-305569/1-B	Method Blank	TCLP	Solid	3010A	305569

Analysis Batch: 305855

Lab Sample ID	Client Sample ID	Prep Type	Matrix	Method	Prep Batch
440-134893-A-1-C MS ^5	Matrix Spike	Total/NA	Solid	6010B	305624
440-134893-A-1-D MSD ^5	Matrix Spike Duplicate	Total/NA	Solid	6010B	305624
440-134953-2	METAL SWEEPS #2	Total/NA	Solid	6010B	305624
LCS 440-305624/2-A ^5	Lab Control Sample	Total/NA	Solid	6010B	305624
MB 440-305624/1-A ^5	Method Blank	Total/NA	Solid	6010B	305624

Prep Batch: 305943

Lab Sample ID	Client Sample ID	Prep Type	Matrix	Method	Prep Batch
440-134953-3	METAL SWEEPS #1	Total/NA	Solid	3050B	
440-135041-H-1-E MS ^5	Matrix Spike	Total/NA	Solid	3050B	
440-135041-H-1-F MSD ^5	Matrix Spike Duplicate	Total/NA	Solid	3050B	
LCS 440-305943/2-A ^5	Lab Control Sample	Total/NA	Solid	3050B	
MB 440-305943/1-A ^5	Method Blank	Total/NA	Solid	3050B	

Analysis Batch: 305984

Lab Sample ID	Client Sample ID	Prep Type	Matrix	Method	Prep Batch
440-134836-A-1-G MS	Matrix Spike	Total/NA	Solid	7471A	305722

Metals (Continued)

Analysis Batch: 305984 (Continued)

Lab Sample ID	Client Sample ID	Prep Type	Matrix	Method	Prep Batch
440-134836-A-1-H MSD	Matrix Spike Duplicate	Total/NA	Solid	7471A	305722
440-134953-2	METAL SWEEPS #2	Total/NA	Solid	7471A	305722
440-134953-3	METAL SWEEPS #1	Total/NA	Solid	7471A	305722
LCS 440-305722/2-A	Lab Control Sample	Total/NA	Solid	7471A	305722
MB 440-305722/1-A	Method Blank	Total/NA	Solid	7471A	305722

Prep Batch: 305992

Lab Sample ID	Client Sample ID	Prep Type	Matrix	Method	Prep Batch
440-134953-1	METAL SWEEPS #1	TCLP	Solid	7470A	305569
440-134953-1 MS	METAL SWEEPS #1	TCLP	Solid	7470A	305569
440-134953-1 MSD	METAL SWEEPS #1	TCLP	Solid	7470A	305569
LCS 440-305569/2-C	Lab Control Sample	TCLP	Solid	7470A	305569
MB 440-305569/1-C	Method Blank	TCLP	Solid	7470A	305569

Analysis Batch: 306002

Lab Sample ID	Client Sample ID	Prep Type	Matrix	Method	Prep Batch
440-134953-1	METAL SWEEPS #1	TCLP	Solid	6010B	305757
440-134953-1 MS	METAL SWEEPS #1	TCLP	Solid	6010B	305757
LCS 440-305569/2-B	Lab Control Sample	TCLP	Solid	6010B	305757
MB 440-305569/1-B	Method Blank	TCLP	Solid	6010B	305757

Analysis Batch: 306121

Lab Sample ID	Client Sample ID	Prep Type	Matrix	Method	Prep Batch
440-134953-3	METAL SWEEPS #1	Total/NA	Solid	6010B	305943
440-135041-H-1-E MS ^5	Matrix Spike	Total/NA	Solid	6010B	305943
440-135041-H-1-F MSD ^5	Matrix Spike Duplicate	Total/NA	Solid	6010B	305943
LCS 440-305943/2-A ^5	Lab Control Sample	Total/NA	Solid	6010B	305943
MB 440-305943/1-A ^5	Method Blank	Total/NA	Solid	6010B	305943

Analysis Batch: 306138

Lab Sample ID	Client Sample ID	Prep Type	Matrix	Method	Prep Batch
440-134953-1	METAL SWEEPS #1	TCLP	Solid	7470A	305992
440-134953-1 MS	METAL SWEEPS #1	TCLP	Solid	7470A	305992
440-134953-1 MSD	METAL SWEEPS #1	TCLP	Solid	7470A	305992
LCS 440-305569/2-C	Lab Control Sample	TCLP	Solid	7470A	305992
MB 440-305569/1-C	Method Blank	TCLP	Solid	7470A	305992

Definitions/Glossary

Client: Ramboll Environ US Corporation
Project/Site: Atlas Precious Metals

TestAmerica Job ID: 440-134953-1

Qualifiers

Metals

Qualifier	Qualifier Description
F1	MS and/or MSD Recovery is outside acceptance limits.
4	MS, MSD: The analyte present in the original sample is greater than 4 times the matrix spike concentration; therefore, control limits are not applicable.
^	ICV,CCV,ICB,CCB, ISA, ISB, CRI, CRA, DLCK or MRL standard: Instrument related QC is outside acceptance limits.

Glossary

Abbreviation	These commonly used abbreviations may or may not be present in this report.
¤	Listed under the "D" column to designate that the result is reported on a dry weight basis
%R	Percent Recovery
CFL	Contains Free Liquid
CNF	Contains no Free Liquid
DER	Duplicate error ratio (normalized absolute difference)
Dil Fac	Dilution Factor
DL, RA, RE, IN	Indicates a Dilution, Re-analysis, Re-extraction, or additional Initial metals/anion analysis of the sample
DLC	Decision level concentration
MDA	Minimum detectable activity
EDL	Estimated Detection Limit
MDC	Minimum detectable concentration
MDL	Method Detection Limit
ML	Minimum Level (Dioxin)
NC	Not Calculated
ND	Not detected at the reporting limit (or MDL or EDL if shown)
PQL	Practical Quantitation Limit
QC	Quality Control
RER	Relative error ratio
RL	Reporting Limit or Requested Limit (Radiochemistry)
RPD	Relative Percent Difference, a measure of the relative difference between two points
TEF	Toxicity Equivalent Factor (Dioxin)
TEQ	Toxicity Equivalent Quotient (Dioxin)

Certification Summary

Client: Ramboll Environ US Corporation
Project/Site: Atlas Precious Metals

TestAmerica Job ID: 440-134953-1

Laboratory: TestAmerica Irvine

All certifications held by this laboratory are listed. Not all certifications are applicable to this report.

Authority	Program	EPA Region	Certification ID	Expiration Date
Alaska	State Program	10	CA01531	06-30-16
Arizona	State Program	9	AZ0671	10-13-16
California	LA Cty Sanitation Districts	9	10256	01-31-17 *
California	State Program	9	2706	06-30-16
Guam	State Program	9	Cert. No. 12.002r	01-23-16 *
Hawaii	State Program	9	N/A	01-29-17
Kansas	NELAP Secondary AB	7	E-10420	07-31-16
Nevada	State Program	9	CA015312007A	07-31-16
New Mexico	State Program	6	N/A	01-29-16 *
Northern Mariana Islands	State Program	9	MP0002	01-29-16 *
Oregon	NELAP	10	4005	01-29-16 *
USDA	Federal		P330-09-00080	07-08-18
Washington	State Program	10	900	09-03-16

* Certification renewal pending - certification considered valid.

Mata, Patty

From: Renee van de Griend [RVandeGriend@ramboll.com]
Sent: Thursday, January 14, 2016 11:02 AM
To: Mata, Patty
Subject: RE: Need more sample weight for TestAmerica COC files from 440-134953-1 Atlas Precious Metals

Patty,

I asked the facility to send at least 108 g – did they send less? The material being analyzed is valuable, so they are trying to minimize quantities.

Also, they were a bit late in sending the samples and we need results by Wednesday. Do we need to do an expedited TAT?

Thanks, Renee

Renée van de Griend, PhD, PE
Principal Consultant
Ramboll Environ
2200 Powell Street, Suite 700
Emeryville, CA 94608 USA
D +1 541 3863411
M +1 541 8063336
rvandegriend@ramboll.com
www.ramboll-environ.com

RAMBOLL ENVIRON

Please note our email domain changed from environcorp.com to ramboll.com. Email sent to my former environcorp.com email address will be automatically delivered to the new address. Please make a note of my new email address in your contact records.

From: Mata, Patty [mailto:patty.mata@testamericainc.com]
Sent: Thursday, January 14, 2016 9:41 AM
To: Renee van de Griend <RVandeGriend@ramboll.com>
Subject: Need more sample weight for TestAmerica COC files from 440-134953-1 Atlas Precious Metals

Hello Rene,

Are you able to send us more sample for Metals Sweeps #1 on the attached COC file for job 440-134953-1; Atlas Precious Metals? We need 100 grams for TCLP test plus 5 grams for TCLP Buffer solution pH test, so we've used the entire sample weight. There is no more sample for the total metals tests. We don't need much for the totals test, about 5 grams. The person who performed the TCLP test did not check to see if there were any other tests needed before the entire sample was used up.

Please feel free to contact me if you have any questions.

Thank you.

Please let us know if we met your expectations by rating the service you received from TestAmerica on this project by visiting our website at: Project Feedback

PATTY MATA
Senior Project Manager

TestAmerica Irvine
THE LEADER IN ENVIRONMENTAL TESTING

Tel: 949.261,1022

Reference: [251030]
Attachments: 1

This message contains information that may be confidential, privileged or otherwise protected by law from disclosure. It is intended for the exclusive use of the Addressee(s). Unless you are the addressee or authorized agent of the addressee, you may not review, copy, distribute or disclose to anyone the message or any information contained within. If you have received this message in error, please contact the sender by electronic reply to email@ramboll.com and immediately delete all copies of the message.

RAMBOLL ENVIRON
2200 Powell Street, Suite 700
Emeryville, California 94608
(510) 655-7400
Fax (510) 655-9517

CHAIN-of-CUSTODY

PROJECT NAME / FACILITY ID: Atlas Precious Metals
FIELD PERSON:
PROJECT NUMBER: 08-38578A
DATE: [redacted]
PROJECT MANAGER: Renee van de Griend
PROJECT LOCATION: Los Angeles, CA
LABORATORY: TestAmerica Irvine
IS THIS A UST PROJECT OR IS EDF REQUIRED? Y (N) IF YES, GLOBAL ID #:
WO#:

SAMPLER: [redacted]
SIGNATURE: [redacted]

SAMPLE I.D. NUMBER	SAMPLE DATE (YEAR)	SAMPLE TIME	SAMPLE DEPTH	MATRIX (S) SOIL (G) GAS (W) WATER	NUMBER OF CONTAINERS	FILTERED/UNFILTERED (F/U)	PRESERVATION (SEE KEY)	ANALYSIS REQUIRED: CAM 17 Metals	TCLP Metals								COMMENTS
Metal sweeps #1					1			x	x								
Metal sweeps #2					1			x									
																	Email results to
																	rvandegriend@
																	ramboll.com
TOTAL	X	X	X	X	2	X	X										

17461 Derian Avenue Suite #100
Irvine, CA 92614

440-134953 Chain of Custody

Dec 1/20

RELINQUISHED BY:	TIME/DATE:	RECEIVED BY:	TIME/DATE:
[redacted]	1-13-16-3:57	(COMPANY):	1-13-16 15:57
RELINQUISHED BY:	TIME/DATE:	RECEIVED BY: (COMPANY):	TIME/DATE:
RELINQUISHED BY:	TIME/DATE:	RECEIVED BY: (COMPANY):	TIME/DATE:

TURNAROUND TIME (CIRCLE ONE): SAMEDAY, 24 HOURS, 48 HOURS, 72 HOURS, 5 DAYS, NORMAL

SAMPLE INTEGRITY — INTACT: Y N Temp

IF SEALED, SEAL INTEGRITY — INTACT: Y N

H = HCL; N = HNO_3; S = H_2SO_4; U = UNKNOWN; NO = NONE; O = OTHER

22.7/22.3JIC 74

RAMBOLL ENVIRON
2200 Powell Street, Suite 700
Emeryville, California 94608
(510) 655-7400
Fax (510) 655-9517

CHAIN-of-CUSTODY

PROJECT NAME / FACILITY ID: Atlas Precious Metals
FIELD PERSON:
PROJECT NUMBER: 08-38578A
DATE:
PROJECT MANAGER: Renee van de Griend
PROJECT LOCATION: Los Angeles, CA
LABORATORY: TestAmerica Irvine
IS THIS A UST PROJECT OR IS EDF REQUIRED? Y N IF YES, GLOBAL ID #:
WO#:

SAMPLER:
SIGNATURE:

SAMPLE I.D. NUMBER	YEAR / SAMPLE DATE	SAMPLE TIME	SAMPLE DEPTH	MATRIX (S) SOIL (G) GAS (W) WATER	NUMBER OF CONTAINERS	FILTERED/UNFILTERED (F/U)	PRESERVATION (SEE KEY)	ANALYSIS REQUIRED: CAM 17 Metals	~~TCLP Metals~~							COMMENTS
Metal sweeps #1	1/	5	8		1			x	~~x~~							Rec'd additional sample 1/14/16
~~Metal sweeps #2~~					1			x								
																Email results to
																rvandegriend@
																ramboll.com
TOTAL	X	X	X	X	2	X	X									

RELINQUISHED BY:	TIME/DATE:	RECEIVED BY:	TIME/DATE:
John	1-14-16	(COMPANY): MWCOTE	1/14 1:58
RELINQUISHED BY:	TIME/DATE:	RECEIVED BY: (COMPANY):	TIME/DATE:
RELINQUISHED BY:	TIME/DATE:	RECEIVED BY: (COMPANY):	TIME/DATE:

TURNAROUND TIME (CIRCLE ONE): SAMEDAY, 24 HOURS, 48 HOURS, 72 HOURS, 5 DAYS, NORMAL

SAMPLE INTEGRITY — INTACT: Y N Temp

IF SEALED, SEAL INTEGRITY — INTACT: Y N

H = HCL; N = HNO_3; S = H_2SO_4; U = UNKNOWN; NO = NONE; O = OTHER

Login Sample Receipt Checklist

Client: Ramboll Environ US Corporation

Job Number: 440-134953-1

Login Number: 134953
List Number: 1
Creator: Chavez, Yonny 1

List Source: TestAmerica Irvine

Question	Answer	Comment
Radioactivity wasn't checked or is </= background as measured by a survey meter.	True	
The cooler's custody seal, if present, is intact.	True	
Sample custody seals, if present, are intact.	True	
The cooler or samples do not appear to have been compromised or tampered with.	True	
Samples were received on ice.	True	
Cooler Temperature is acceptable.	True	
Cooler Temperature is recorded.	True	
COC is present.	True	
COC is filled out in ink and legible.	True	
COC is filled out with all pertinent information.	False	No sample date or time on COC.
Is the Field Sampler's name present on COC?	False	Field on COC is blank.
There are no discrepancies between the containers received and the COC.	True	
Samples are received within Holding Time.	True	
Sample containers have legible labels.	True	
Containers are not broken or leaking.	True	
Sample collection date/times are provided.	False	No sample date or time on COC.
Appropriate sample containers are used.	True	
Sample bottles are completely filled.	True	
Sample Preservation Verified.	N/A	
There is sufficient vol. for all requested analyses, incl. any requested MS/MSDs	True	
Containers requiring zero headspace have no headspace or bubble is <6mm (1/4").	True	
Multiphasic samples are not present.	True	
Samples do not require splitting or compositing.	True	
Residual Chlorine Checked.	N/A	

2X4

Order #: 383678 **Client:** Unique Premium Metals Inc.
Matrix: SOLID **Client Sample ID:** CL-1
Date Sampled:
Time Sampled:
Sampled By:

Analyte	Result	DF	DLR	Units	Date/Analyst	
6010B ICP Metals - Solid/Liquid						
Antimony	ND	1	3.0	mg/Kg	10/11/02	KN
Arsenic	ND	1	0.5	mg/Kg	10/11/02	KN
Barium	10400	1	1.0	mg/Kg	10/11/02	KN
Beryllium	ND	1	0.5	mg/Kg	10/11/02	KN
Cadmium	22.9	1	0.5	mg/Kg	10/11/02	KN
Chromium	8.75	1	1.0	mg/Kg	10/11/02	KN
Cobalt	ND	1	0.5	mg/Kg	10/11/02	KN
Copper	16800	1	1.0	mg/Kg	10/11/02	KN
Lead	8.44	1	0.5	mg/Kg	10/11/02	KN
Molybdenum	1.57	1	1.0	mg/Kg	10/11/02	KN
Nickel	1640	1	1.5	mg/Kg	10/11/02	KN
Selenium	ND	1	1.0	mg/Kg	10/11/02	KN
Silver	375	1	0.5	mg/Kg	10/11/02	KN
Thallium	ND	1	1.0	mg/Kg	10/11/02	KN
Vanadium	0.565	1	0.5	mg/Kg	10/11/02	KN
Zinc	5100	1	5.0	mg/Kg	10/11/02	KN

DLR = Detection limit for reporting purposes, ND = Not Detected below indicated detection limit, DF = Dilution Factor

HIBIT 4

Order #: 383679 **Client:** Unique Premium Metals Inc.
Matrix: SOLID **Client Sample ID:** LA Classic #1
Date Sampled:
Time Sampled:
Sampled By:

Analyte	Result	DF	DLR	Units	Date/Analyst	
6010B ICP Metals - Solid/Liquid						
Antimony	ND	1	3.0	mg/Kg	10/11/02	KN
Arsenic	ND	1	0.5	mg/Kg	10/11/02	KN
Barium	49.2	1	1.0	mg/Kg	10/11/02	KN
Beryllium	ND	1	0.5	mg/Kg	10/11/02	KN
Cadmium	149	1	0.5	mg/Kg	10/11/02	KN
Chromium	145	1	1.0	mg/Kg	10/11/02	KN
Cobalt	7.02	1	0.5	mg/Kg	10/11/02	KN
Copper	18000	1	1.0	mg/Kg	10/11/02	KN
Lead	10.7	1	0.5	mg/Kg	10/11/02	KN
Molybdenum	23.3	1	1.0	mg/Kg	10/11/02	KN
Nickel	207	1	1.5	mg/Kg	10/11/02	KN
Selenium	ND	1	1.0	mg/Kg	10/11/02	KN
Silver	279	1	0.5	mg/Kg	10/11/02	KN
Thallium	ND	1	1.0	mg/Kg	10/11/02	KN
Vanadium	13.5	1	0.5	mg/Kg	10/11/02	KN
Zinc	5840	1	5.0	mg/Kg	10/11/02	KN

X = Detection limit for reporting purposes, ND = Not Detected below indicated detection limit, DF = Dilution Factor

284 4

Order #: 383680 **Client:** Unique Premium Metals Inc.
Matrix: SOLID **Client Sample ID:** May #1
Date Sampled:
Sampled:
pled By:

Analyte	Result	DF	DLR	Units	Date/Analyst	
6010B ICP Metals - Solid/Liquid						
Antimony	ND	1	3.0	mg/Kg	10/11/02	KN
Arsenic	ND	1	0.5	mg/Kg	10/11/02	KN
Barium	11100	1	1.0	mg/Kg	10/11/02	KN
Beryllium	ND	1	0.5	mg/Kg	10/11/02	KN
Cadmium	46.3	1	0.5	mg/Kg	10/11/02	KN
Chromium	45.6	1	1.0	mg/Kg	10/11/02	KN
Cobalt	2.29	1	0.5	mg/Kg	10/11/02	KN
Copper	14500	1	1.0	mg/Kg	10/11/02	KN
Lead	6.64	1	0.5	mg/Kg	10/11/02	KN
Molybdenum	ND	1	1.0	mg/Kg	10/11/02	KN
Nickel	2510	1	1.5	mg/Kg	10/11/02	KN
Selenium	ND	1	1.0	mg/Kg	10/11/02	KN
Silver	357	1	0.5	mg/Kg	10/11/02	KN
Thallium	ND	1	1.0	mg/Kg	10/11/02	KN
Vanadium	2.73	1	0.5	mg/Kg	10/11/02	KN
Zinc	4650	10	50.0	mg/Kg	10/13/02	KN

LR = Detection limit for reporting purposes, ND = Not Detected below indicated detection limit, DF = Dilution Factor

EXHIBIT 5
EXAMPLE POST-PROCESSING ASSAY

GANNON & SCOTT
Advancing Precious Metals Refining & Assaying Since 1919
Doing It Right

Provisional Statement

November 19, 2015

Customer: Atlas Precious Metals, Inc.
640 South Hill Street, Suite 743
Los Angeles, CA 90014
Mr. Arto Gullapyan

Customer Number: A535 PO#: 2576698

Gannon & Scott #: 57663 (Assay Exchange) Received Date: 11/05/2015

Market Date: 11/19/2015 Rep Date: 11/09/2015

Material Received: 256.000 Lb Prepared Sweeps
Seal # 1211788

Results:

Gold	122.884 Oz	Purchase @	1,082.6000 / Oz	=	$133,034.22
Silver	88.255 Oz	Purchase @	14.2100 / Oz	=	$1,254.10
Platinum	2.849 Oz	Purchase @	848.0000 / Oz	=	$2,415.95

Fees:

Treatment Fee	256.000 Lb	@	$2.900 /Lb	=	(742.40)
Assay Fee					(160.00)
Gold Refining Fee	122.884 Oz	@	$8.500 /Oz	=	(1,044.51)
Silver Refining Fee	88.255 Oz	@	$0.750 /Oz	=	(66.19)
Platinum Refining Fee	2.849 Oz	@	$25.000 /Oz	=	(71.23)
Wire Transfer 11/23/15	1.000	@	$25.000	=	(25.00)
Shipping	1.000	@	$219.870	=	(219.87)

Due You via Wire Transfer: $134,375.07

33 Kenny Drive •Cranston, RI 02920 •(401) 463-5550 •Fax (401) 463-5971
2113 East Sky Harbor Circle South •Phoenix, AZ 85034 •(602) 275-1525 •Fax: (602) 273-6241
www.gannon-scott.com

Process Report / Atlas Precious Metals, Inc.

Material:	Prepared Sweeps				
In @		256.000 Lb			
Out @		256.000 Lb			
Sample Issued @		0.250 Lb			
Moisture @ 0.481%		1.230 Lb			
Weight to Govern:		254.520 Lb			
	@	34.131 ppt	Gold	=	126.685 Oz
	@	26.419 ppt	Silver	=	98.061 Oz
	@	1.037 ppt	Platinum	=	3.849 Oz

Totals

126.685 Oz @ 97.000%	=	122.884 Oz	Gold
98.061 Oz @ 90.000%	=	88.255 Oz	Silver
3.849 Oz - 1.000 Oz Min	=	2.849 Oz	Platinum

Provisional

122.884 Oz @ 100.000%	=	122.884 Oz	Gold
88.255 Oz @ 100.000%	=	88.255 Oz	Silver
2.849 Oz @ 100.000%	=	2.849 Oz	Platinum

EXHIBIT 6
TRUST AGREEMENT

CLOSURE/POSTCLOSURE TRUST AGREEMENT

Trust Account Number: _____

This agreement is entered into as of _____ by and between:
Date

GRANTOR	TRUSTEE
Owner/Operator Name Atlas Precious Metals, Inc.	Trustee Name Wells Fargo Bank, N.A.
Address 640 South Hill Street, Suite 743 Los Angeles, CA 90014	Address 707 Wilshire Blvd., 17th Floor Los Angeles, CA 90017 Attn: Corporate, Municipal and Escrow Services
[X] Corporation [ ] Association [ ] Partnership [ ] Proprietorship In the State of: California	[X] A National Bank [ ] Incorporated in the State of: _____

This Trust Agreement is a: [X] **Trust Agreement** [ ] **Standby Trust Agreement**

WHEREAS, the Department of Toxic Substances Control (DTSC), a department of the State of California, has established certain regulations applicable to the Grantor, requiring that an owner or operator of a hazardous waste management facility/transportable treatment unit (TTU) shall provide assurance that funds will be available when needed for closure and/or postclosure care of the facility/TTU,

WHEREAS, the Grantor has elected to establish a trust to provide all or part of such financial assurance for the facilities/TTUs identified herein,

WHEREAS, the Grantor, acting through its duly authorized officers, has selected the Trustee to be the trustee under this agreement, and the Trustee is willing to act as trustee,

NOW, THEREFORE, the Grantor and the Trustee agree as follows:

Section 1. Definitions. As used in this Agreement:

(a) The term "Grantor" means the owner or operator who enters into this Agreement and any successor or assigns of the Grantor.

(b) The term "Trustee" means the Trustee who enters into this Agreement and any successor Trustee.

(c) The term "Beneficiary" means the State of California, Department of Toxic Substances Control.

Section 2. Identification of Facilities/TTUs and Cost Estimates. This Agreement pertains to the facilities/TTUs and cost estimates identified on attached Schedule A. [on Schedule A for each facility/TTU list the hazardous waste facility/TTU EPA Identification Number, name, address, and the current closure and/or postclosure cost estimates (Indicate the closure and postclosure amounts separately), or portions thereof, for which financial assurance is demonstrated by this Agreement.]

Section 3. Establishment of Fund. The Grantor and the Trustee hereby establish a trust fund, the "Fund" for the benefit of the Beneficiary. The Grantor and the Trustee intend that no third party

has access to the Fund except as herein provided. The Fund is established initially as consisting of the property, which is acceptable to the Trustee, described in Schedule B attached hereto. Such property and any other property subsequently transferred to the Trustee is referred to as the Fund, together with all earnings and profits thereon, less any payments or distributions made by the Trustee pursuant to this Agreement. The Fund shall be held by the Trustee, IN TRUST, as hereinafter provided. The Trustee shall not be responsible nor shall it undertake any responsibility for the amount or adequacy of, nor any duty to collect from the Grantor, any payments necessary to discharge any liabilities of the Grantor established by the Beneficiary.

Section 4. Payment for Closure and Postclosure Care. The Trustee shall make payments from the Fund as the Beneficiary shall direct, in writing, to provide for the payment of the costs of closure and/or postclosure care of the facilities/TTUs covered by this Agreement. The Trustee shall reimburse the Grantor or other persons as specified by the Beneficiary from the Fund for closure and postclosure expenditures in such amounts as the Beneficiary shall direct in writing. In addition, the Trustee shall refund to the Grantor such amounts as the Beneficiary specifies in writing. Upon refund, such funds shall not constitute part of the Fund as defined herein.

Section 5. Payments Comprising the Fund. Payments made to the Trustee for the Fund shall consist of cash or securities acceptable to the Trustee.

Section 6. Trustee Management. The Trustee shall invest and reinvest the principal and income of the Fund and keep the Fund invested as a single fund, without distinction between principal and income, in accordance with general investment policies and guidelines which the Grantor may communicate in writing to the Trustee from time to time, subject, however, to the provisions of this section. In investing, reinvesting, exchanging, selling, and managing the Fund, the Trustee shall discharge his or her duties with respect to the trust fund solely in the interest of the Beneficiary and with the care, skill, prudence, and diligence under the circumstances then prevailing which persons of prudence, acting in a like capacity and familiar with such matters, would use in the conduct of an enterprise of a like character and with like aims; except that:

(i) Securities or other obligations of the Grantor, or any other owner or operator of the facilities/TTUs, or any of their affiliates as defined in the Investment Company Act of 1940, as amended, 15 United States Code section 80a-2(a), shall not be acquired or held, unless they are securities or other obligations of the Federal or State government;

(ii)The Trustee is authorized to invest the Fund in time or demand deposits of the Trustee, to the extent insured by an agency of the Federal or State government; and

(iii) The Trustee is authorized to hold cash awaiting investment or distribution uninvested for a reasonable time and without liability for the payment of interest thereon.

Section 7. Commingling and Investment. The Trustee is expressly authorized in its discretion:

(a) To transfer from time to time any or all of the assets of the Fund to any common, commingled or collective trust fund created by the Trustee in which the Fund is eligible to participate, subject to all of the provisions thereof, to be commingled with the assets of other trusts participating therein; and

(b) To purchase shares in any investment company registered under the Investment Company Act of 1940, 15 United States Code section 80a-1 et seq., including one which may be created, managed, underwritten or to which investment advice is rendered or the shares of which are sold by the Trustee. The Trustee may vote such shares in its discretion.

Section 8. Express Powers of Trustee. Without in any way limiting the powers and discretion conferred upon the Trustee by the other provisions of this Agreement or by law, the Trustee is expressly authorized and empowered:

(a) To sell, exchange, convey, transfer or otherwise dispose of any property held by it, by public or private sale. No person dealing with the Trustee shall be bound to see to the application of the purchase money or to inquire into the validity or expediency of any such sale or other disposition;

(b) To make, execute, acknowledge and deliver any and all documents of transfer and conveyance and any and all other instruments that may be necessary or appropriate to carry out the powers herein granted;

(c) To register any securities held in the Fund in its own name or in the name of a nominee and to hold any security in bearer form or in book entry, or to combine certificates representing such securities with certificates of the same issue held by the Trustee in other fiduciary capacities, or to deposit or arrange for the deposit of such securities in a qualified central depositary even though, when so deposited, such securities may be merged and held in bulk in the name of the nominee of such depositary with other securities deposited therein by another person, or to deposit or arrange for the deposit of any securities issued by the United States Government, or any agency or instrumentality thereof, with a Federal Reserve bank, but the books and records of the Trustee shall at all times show that all such securities are part of the Fund;

(d) To deposit any cash in the Fund in interest-bearing accounts maintained or savings certificates issued by the Trustee, in its separate corporate capacity, or in any other banking institution affiliated with the Trustee, to the extent insured by an agency of the Federal or State government; and

(e) To compromise or otherwise adjust all claims in favor of or against the Fund.

Section 9. Taxes and Expenses. All taxes of any kind that may be assessed or levied against or in respect of the Fund and all brokerage commissions incurred by the Fund shall be paid from the Fund. All other expenses incurred by the Trustee in connection with the administration of this Trust, including fees for legal services rendered to the Trustee, the compensation of the Trustee to the extent not paid directly by the Grantor, and all other proper charges and disbursements of the Trustee shall be paid from the Fund.

Section 10. Annual Valuation. The Trustee shall annually, at least 30 days prior to the anniversary date of establishment of the Fund, furnish to the Grantor and to the Beneficiary a statement confirming the value of the Trust. Any securities in the Fund shall be valued at market value as of no more than 60 days prior to the anniversary date of establishment of the Fund. The failure of the Grantor to object in writing to the Trustee within 90 days after the statement has been furnished to the Grantor and Beneficiary shall constitute a conclusively binding assent by the Grantor, barring the Grantor from asserting any claim or liability against the Trustee with respect to matters disclosed in the statement.

Section 11. Advice of Counsel. The Trustee may from time to time consult with counsel, who may be counsel to the Grantor, with respect to any question arising as to the construction of this Agreement or any action to be taken hereunder. The Trustee shall be fully protected, to the extent permitted by law, in acting upon the advice of counsel.

Section 12. Trustee Compensation. The Trustee shall be entitled to reasonable compensation for its services as agreed upon in writing from time to time with the Grantor.

Section 13. Successor Trustee. The Trustee may resign or the Grantor may replace the Trustee, but such resignation or replacement shall not be effective until the Grantor has appointed a successor trustee and this successor accepts the appointment. The successor trustee shall have the same powers and duties as those conferred upon the Trustee hereunder. Upon the successor trustee's acceptance of the appointment, the Trustee shall assign, transfer and pay over to the successor trustee the funds and properties then constituting the Fund. If, for any reason, the Grantor cannot or does not act in the event of the resignation of the Trustee, the Trustee may apply to a court of competent jurisdiction for the appointment of a successor trustee or for instructions. The successor trustee shall specify the date on which it assumes administration of the trust in a writing sent to the Grantor, Beneficiary, and the present Trustee by certified mail 10 days before such change becomes effective. Any expenses incurred by the Trustee as a result of any of the acts contemplated by this Section shall be paid as provided in Section 9.

Section 14. Instructions to the Trustee. All orders, requests and instructions by the Grantor to the Trustee shall be in writing, signed by such persons as are designated in the attached Exhibit A or such other designees as the Grantor may designate by amendment to Exhibit A. The Trustee shall be fully protected in acting without inquiry in accordance with the Grantor's orders, requests and instructions. All orders, requests and instructions by the Beneficiary to the Trustee shall be in writing, signed by the Beneficiary designees, and the Trustee shall act and shall be fully protected in acting in accordance with such orders, requests and instructions. The Trustee shall have the right to assume, in the absence of written notice to the contrary, that no event constituting a change or a termination of the authority of any person to act on behalf of the Grantor or the Beneficiary hereunder has occurred. The Trustee shall have no duty to act in the absence of such orders, requests and instructions from the Grantor and/or Beneficiary, except as provided for herein.

Section 15. Notice of Nonpayment. The Trustee shall notify the Grantor and the Beneficiary, by certified mail within 10 days following the expiration for the 30-day period after the anniversary of the establishment of the Trust, if no payment is received from the Grantor during that period. After the pay-in period is completed, the Trustee shall not be required to send a notice of nonpayment.

Section 16. Amendment of Agreement. This agreement may be amended by an instrument in writing executed by the Grantor, the Trustee and the Beneficiary, or by the Trustee and the Beneficiary, if the Grantor ceases to exist.

Section 17. Irrevocability and Termination. Subject to the right of the parties to amend this Agreement as provided in Section 16, this Trust shall be irrevocable and shall continue until terminated at the written agreement of the Grantor, the Trustee, and the Beneficiary, or by the Trustee and the Beneficiary, if the Grantor ceases to exist. Upon termination of the Trust, all remaining trust property, less final trust administration expenses, shall be delivered to the Grantor.

Section 18. Immunity and Indemnification. The Trustee shall not incur personal liability of any nature in connection with any act or omission, made in good faith, in the administration of this Trust, or in carrying out any directions by the Grantor or the Beneficiary issued in accordance with this Agreement. The Trustee shall be indemnified and saved harmless by the Grantor or from the Trust Fund, or both, from and against any personal liability to which the Trustee may be subjected by reason of any act or conduct in its official capacity, including all expenses reasonably incurred in its defense in the event the Grantor fails to provide such defense.

Section 19. Choice of Law. This Agreement shall be administered, construed and enforced according to the laws of the State of California.

Section 20. Interpretation. As used in this Agreement, words in the singular include the plural and words in the plural include the singular. The descriptive headings for each Section of this Agreement shall not affect the interpretation or the legal efficacy of this Agreement.

IN WITNESS WHEREOF the parties have caused this Agreement to be executed by their respective officers duly authorized and their corporate seals to be hereunto affixed and attested as of the date first above written: The parties below certify that the wording of this Agreement is identical to the wording specified in California Code of Regulations, title 22, section 66264.151, subsection (a)(1) and is being executed in accordance with the requirements of California Code of Regulations, title 22, division 4.5, chapter 14 and 15, article 8, sections 66264.140 through 66264.148 and sections 66265.140 through 66265.148.

Grantor	Trustee
Signature of Grantor	Signature of Trustee
Joe Samuelian	TOM ORLINA
Typed or Printed Name	Typed or Printed Name
President	VICE PRESIDENT
Title	Title
Attest:	Attest:
	Asst. Vice President
Title	Title
Seal	Seal

PRIVACY STATEMENT

This information is requested by the Department of Toxic Substances Control, under Health and Safety Code section 25245 in order to verify adequate financial assurance of hazardous waste facility(ies)/TTU(s). Completion of the form or submission of a document containing the wording specified in California Code of Regulations, title 22, section 66264.151, subsection (a) is mandatory. The consequences of not completing the form (or a document containing the specified wording) is denial of a permit to operate a hazardous waste facility/TTU. Information may be provided to U. S. Environmental Protection Agency, State Attorney General, Air Resources Board, California Integrated Waste Management Board, Energy Resources Conservation and Development Commission, Water Resources Control Board and California Regional Water Quality Control Boards. For more information or access to your records, contact the Department of Toxic Substances Control, 8800 Cal Center Drive, Sacramento, California, 95826, (916) 255-3545.

TRUST AGREEMENT/STANDBY TRUST AGREEEMENT

EXHIBIT A

TRUST AGREEMENT BY AND BETWEEN

_____

AND THE

_____

As provided for in Section 14 of the Trust Agreement, the persons, other than the officials of the Beneficiary identified in Section 14 of the Trust Agreement, who, until this Exhibit A is amended, shall have the authority to make orders, requests, and instructions to the Trustee are:

Officials of the Grantor.

Officials of the Grantor who have authority to give instructions are:

Name(s): Joe Samuelian _____ Joe Samuelian

Title(s): President
Atlas Precious Metals, Inc. _____

Any orders, requests or instructions by the Grantor to the Trustee, pursuant to the foregoing Agreement, may be signed by any one of the following persons:

Name(s): _____ _____

Title(s): _____ _____

TRUST AGREEMENT/STANDBY TRUST AGREEEMENT

SCHEDULE A

This Agreement demonstrates financial assurance for the following facility(ies)/TTU(s):

Hazardous Waste Facility Identification Number	Name and Address of Hazardous Waste Facility /TTU	Closure Financial Assurance	Postclosure Financial Assurance
EPA ID No. CAL000098454	Atlas Precious Metals, Inc. 640 South Hill Street, Suite 743 Los Angeles, CA 90014	$10,862.00	N/A
	Total:	$10,862.00	

The cost estimates listed here were last adjusted on 12/30/16

Date

TRUST AGREEMENT/STANDBY TRUST AGREEEMENT

SCHEDULE B
(TRUST AGREEMENT)

The fund is established initially as consisting of the following:

$ 10,000.00 with $1,050.00 additional deposit (dollar amount), Ten Thousand Dollars plus One Thousand Fifty Dollars for Total Eleven Thousand Fifty Dollars (spell out dollar amount)

as evidenced by

Wire received 1/10/11 for $10,000 & wire received 9/13/16 for $1,050.00
name of institution drawn on

N/A (check number) dated N/A (date)

I hereby certify that funds have been received and deposited. 9/13/16

Authorized Signature	Title
Rowe Lawson	Asst. Vice President
Typed or Printed Name of Person Signing	**Address**
Rowe Lawson	333 Market - 18th Floor San Francisco, CA 94105 MAC: A0119-183

SCHEDULE B
(STANDBY TRUST AGREEMENT)

List of Property Comprising Trust Fund

None at the time of the trust establishment.

Funding of this Standby Trust Agreement is contingent upon drafts against that primary, ☐ Surety Bond ☐ Letter of Credit number: _____
surety bond or letter of credit number

issued by _____
name of issuing institution

on _____ in accordance with the terms specified.
date

CALIFORNIA ALL-PURPOSE ACKNOWLEDGMENT

State of California
County of Los Angeles

On December 28, 2010 (Date) before me, Ani Kaprielian, Notary Public (Here Insert Name and Title of the Officer),

personally appeared Joe Samuelian (Name(s) of Signer(s)),

who proved to me on the basis of satisfactory evidence to be the person(~~s~~) whose name(s) is/~~are~~ subscribed to the within instrument and acknowledged to me that he/~~she~~/~~they~~ executed the same in his/~~her~~/~~their~~ authorized capacity(~~ies~~), and that by his/~~her~~/~~their~~ signature(~~s~~) on the instrument the person(~~s~~), or the entity upon behalf of which the person(~~s~~) acted, executed the instrument.

ANI KAPRIELIAN
Commission # 1844521
Notary Public - California
Los Angeles County
My Comm. Expires May 6, 2013

I certify under PENALTY OF PERJURY under the laws of the State of California that the foregoing paragraph is true and correct.

WITNESS my hand and official seal.

Signature _____ (Signature of Notary Public)

Place Notary Seal Above

OPTIONAL

Though the information below is not required by law, it may prove valuable to persons relying on the document and could prevent fraudulent removal and reattachment of this form to another document.

Description of Attached Document

Title or Type of Document: Trust Agreement/Standby Trust Agreement

Document Date: _____ Number of Pages: _____

Signer(s) Other Than Named Above: _____

Capacity(ies) Claimed by Signer(s)

Signer's Name: Joe Samuelian
- ☐ Individual
- ☒ Corporate Officer — Title(s): President
- ☐ Partner — ☐ Limited ☐ General
- ☐ Attorney in Fact
- ☐ Trustee
- ☐ Guardian or Conservator
- ☐ Other: _____

Signer is Representing: _____

RIGHT THUMBPRINT OF SIGNER
Top of thumb here

Signer's Name: _____
- ☐ Individual
- ☐ Corporate Officer — Title(s): _____
- ☐ Partner — ☐ Limited ☐ General
- ☐ Attorney in Fact
- ☐ Trustee
- ☐ Guardian or Conservator
- ☐ Other: _____

Signer is Representing: _____

RIGHT THUMBPRINT OF SIGNER
Top of thumb here

©2007 National Notary Association • 9350 De Soto Ave., P.O. Box 2402 • Chatsworth, CA 91313-2402 • www.NationalNotary.org Item #5907 Reorder: Call Toll-Free 1-800-876-6827

CALIFORNIA ALL-PURPOSE ACKNOWLEDGMENT

State of California
County of Los Angeles

On December 28, 2010 (Date) before me, Ani Kaprielian, Notary Public (Here Insert Name and Title of the Officer),
personally appeared Joe Samuelian (Name(s) of Signer(s))

who proved to me on the basis of satisfactory evidence to be the person(~~s~~) whose name(~~s~~) is/~~are~~ subscribed to the within instrument and acknowledged to me that he/~~she~~/~~they~~ executed the same in his/~~her~~/~~their~~ authorized capacity(~~ies~~), and that by his/~~her~~/~~their~~ signature(~~s~~) on the instrument the person(~~s~~), or the entity upon behalf of which the person(~~s~~) acted, executed the instrument.

ANI KAPRIELIAN
Commission # 1844521
Notary Public - California
Los Angeles County
My Comm. Expires May 6, 2013

I certify under PENALTY OF PERJURY under the laws of the State of California that the foregoing paragraph is true and correct.

WITNESS my hand and official seal.

Signature _____ (Signature of Notary Public)

Place Notary Seal Above

OPTIONAL

Though the information below is not required by law, it may prove valuable to persons relying on the document and could prevent fraudulent removal and reattachment of this form to another document.

Description of Attached Document

Title or Type of Document: Closure/Postclosure Trust Agreement

Document Date: _____ Number of Pages: _____

Signer(s) Other Than Named Above: _____

Capacity(ies) Claimed by Signer(s)

Signer's Name: Joe Samuelian
- ☐ Individual
- ☒ Corporate Officer — Title(s): President
- ☐ Partner — ☐ Limited ☐ General
- ☐ Attorney in Fact
- ☐ Trustee
- ☐ Guardian or Conservator
- ☐ Other: _____

Signer Is Representing: _____

RIGHT THUMBPRINT OF SIGNER
Top of thumb here

Signer's Name: _____
- ☐ Individual
- ☐ Corporate Officer — Title(s): _____
- ☐ Partner — ☐ Limited ☐ General
- ☐ Attorney in Fact
- ☐ Trustee
- ☐ Guardian or Conservator
- ☐ Other: _____

Signer Is Representing: _____

RIGHT THUMBPRINT OF SIGNER
Top of thumb here

© 2007 National Notary Association • 9350 De Soto Ave., P.O. Box 2402 • Chatsworth, CA 91313-2402 • www.NationalNotary.org Item #5907 Reorder: Call Toll-Free 1-800-876-6827

ATTACHMENT B
FORM 1093A

STANDARDIZED PERMIT SERIES DETERMINATION
A, B, C and SMALL QUANTITY C

Atlas Precious Metals, Inc.
640 South Hill Street, Suite 743
Los Angeles, CA 90014

Facility Name/Address

CAL000098454

EPA I.D. Number

September 17, 2016

Date

Determine the total volume of hazardous waste treated, or that will be treated, per month and/or the total storage design capacity under the Standardized Permit authorization at this facility. Please check the box that indicates the highest volume of hazardous waste managed.

A. Total hazardous waste treatment volume and/or weight regulated under the standardized permit:

_____ **gallons/month liquid and/or** 3000 **pounds or tons/month solid.**

B. Total hazardous waste storage capacity, at any one time, regulated under the standardized permit:

_____ **gallons liquid and/or** 3000 **pounds or tons/solid.**

SERIES	TOTAL MONTHLY TREATMENT VOLUME	TOTAL FACILITY STORAGE DESIGN CAPACITY	CHECK ONE
A	Greater than 50,000 gallons. Greater than 100,000 pounds.	Greater than 500,000 gallons. Greater than 500 tons.	
B	Greater than 5,000 gallons and less than 50,000 gallons. Greater than 10,000 pounds and less than 100,000 pounds.	Greater than 50,000 gallons and less than 500,000 gallons. Greater than 100,000 pounds and less than 500 tons.	
C	Less than 5,000 gallons. Less than 10,000 pounds.	Less than 50,000 gallons. Less than 100,000 pounds.	
SMALL QUANTITY C	Less than 1,500 gallons. Less than 3,000 pounds.	Less than 15,000 gallons. Less than 30,000 pounds.	XXX

GALLONS - LIQUID HAZARDOUS WASTE
POUNDS/TONS - SOLID HAZARDOUS WASTE

Region _____

For DTSC Use Only

STANDARDIZED PERMIT NOTIFICATION FOR EXISTING OR PROPOSED HAZARDOUS WASTE FACILITIES

Please refer to the instructions available from DTSC before completing this form.

Initial Notification for New Facility ☐ **Revised/Renewal Notification for Existing Facility** ☒

I. FACILITY INFORMATION

EPA ID NUMBER CA L 0 0 0 0 9 8 4 5 4 **BOE NUMBER (if available) H**__**HQ**__ __ __ __ __ __ __ __

NAME (Company or Facility) Atlas Precious Metals, Inc.
(DBA--Doing Business As)

FACILITY ADDRESS 640 South Hill Street, Suite 743

CITY Los Angeles **CA** **ZIP** 90014 -_____

COUNTY Los Angeles

LOCATION (list major cross streets, or nearby landmark)
Between 6th Street and 7th Street

(Latitude & Longitude) Latitude:34.0468 Longitude: -118.2536

CONTACT PERSON Samuelian Ani
(Last Name) **(First Name)**

TITLE Vice President

TELEPHONE NUMBER (818) 414 - 5454

II. MAILING ADDRESS, IF DIFFERENT:

COMPANY NAME (DBA) _____

STREET _____

_____

CITY _____ **STATE** ____ **ZIP** _____-_____

COUNTRY _____
(Complete only if not USA)

CONTACT PERSON _____ _____
(Last Name) **(First Name)**

TELEPHONE NUMBER (_____)_____-_____

STANDARDIZED PERMIT NOTIFICATION FOR EXISTING OR PROPOSED HAZARDOUS WASTE FACILITIES

III. FACILITY OPERATOR INFORMATION

NAME Samuelian (Last Name) Joe (First Name)

ADDRESS 640 South Hill Street, Suite 743

CITY Los Angeles **STATE** CA **ZIP** 90014 -

TELEPHONE NUMBER(562 **)** 201 - 2942

IV. FACILTIY OWNER INFORMATION

NAME Samuelian (Last Name) Joe (First Name)

ADDRESS 640 South Hill Street, Suite 743

CITY Los Angeles **STATE** CA **ZIP** 90014 -

COUNTRY (Complete only if not USA)

TELEPHONE NUMBER(213 **)** 622 - 9995

OWNERSHIP STATUS: **Federal** ☐ **State** ☐ **Public** ☐ **Private** ☒

V. LAND OWNER INFORMATION

NAME Los Angeles Investment Company (Last Name) (First Name)

ADDRESS 650 South Hill Street, Suite 1010

CITY Los Angeles **STATE** CA **ZIP** 90014 -

COUNTRY (Complete only if not USA)

TELEPHONE NUMBER(213 **)** 629 - 2124

VI. DESCRIPTION OF BUSINESS ACTIVITIES: SIC CODES 8734

Process jewelry sweeps and polishings to determine the precious metal content of material. After processing, the material is shipped offsite to outside refiners for further processing.

VII. FACILITY STATUS

A. Other Environmental Permits or Construction Approvals Held or Applied For:

- [ ] NPDES
- [ ] Waste Discharge Requirements
- [x] Air Quality Permit
- [ ] Land Use Permit
- [ ] Local Industrial Sanitation District
- [ ] TSCA PCB Permit
- [ ] HW Full Permit
- [ ] Hazardous Waste (HW) Permit By Rule
- [ ] HW Conditional Authorization
- [ ] HW Conditional Exemption
- [ ] HW Transporter Registration

Other_____

B. Is facility on Indian Lands? Yes [ ] No [x]

VIII. HAZARDOUS WASTE INFORMATION FOR ENTIRE SITE

A. 2 **Total number of hazardous waste storage units**

_____ **Number of storage units under full HW facility permit**

2 **Number of storage units under standardized permit**

B. 7 **Total number of hazardous waste treatment units**

_____ **Number of treatment units under full HW facility permit**

7 **Number of treatment units under standardized permit**

_____ **Number of treatment units under HW permit by rule**

_____ **Number of treatment units under HW conditional authorization**

_____ **Number of treatment units under HW conditional exemption**

C. Briefly describe all hazardous waste treatment and/or storage activities to be conducted at the facility. Include treatment under a full permit, Permit by Rule, treatment under Conditional Authorization, treatment under Conditional Exemption, and storage and/or treatment under the Standardized Permit. Annotate the description of each of the storage/treatment activities as Permit By Rule (PBR), Conditional Authorization (CA), Conditional Exemption (CE), or Standardized Permit (SP) as appropriate. Note that detailed unit-specific information forms for each unit that is or will be authorized under the Standardized Permit are required attachments to this notification. (Modify the form if more spaces are needed)

Jewelry sweeps (polishing dust) from jewelry manufacturers (generators) within the same building or offsite manufacturers are accepted and assigned a lot number. Individual lots of sweeps are put in a kiln to melt off wax on polishing compound and dry metal dust. The dust is then ground and sieved to a desired size and assayed for gold, silver, and platinum content. The generators are then notified of the precious metals content and their concurrence. Individual lots are then consolidated and sent under manifest to precious metal recycling facilities for reclamation.

STANDARDIZED PERMIT NOTIFICATION FOR EXISTING OR PROPOSED HAZARDOUS WASTE FACILITIES

IX. REQUIRED ATTACHMENTS

[X] A. A scaled map to show the facility location including major freeways and cross streets.

[X] B. A scaled diagram to show the facility site/plot map indicating the buildings, parking lots, and landscape areas.

[X] C. A scaled diagram to show the locations of hazardous waste management units to be permitted under the standardized permit.

[X] D . A unit description information sheet for each of the hazardous waste storage and/or treatment units that will be under the Standardized Permit.

X. OWNER CERTIFICATION

"I certify that the unit or units described in these documents will meet the eligibility and operating requirements of state statutes and regulations for the standardized permit tier. I understand that I am required to provide financial assurance for this facility, and I am required to conduct a corrective action program as part of the standardized permit application to be submitted to the Department of Toxic Substances Control."

"I certify under penalty of law that this document and all attachments were prepared under my direction or supervision in accordance with a system designed to assure that qualified personnel properly gather and evaluate the information submitted. Based on my inquiry of the person or persons who will manage the system or those directly responsible for gathering the information, the information is, to the best of my knowledge and belief, true, accurate and complete. I am aware that there are significant penalties for submitting false information, including the possibility of fines and imprisonment for known violations."

Joe Samuelian	President
Name (Print or Type)	Title
Joe Samuelian	9/14/16
Signature	Date Signed

XI. OPERATOR CERTIFICATION

"I certify that the unit or units described in these documents will meet the eligibility and operating requirements of state statutes and regulations for the standardized permit tier. I understand that I am required to provide financial assurance for this facility, and I am required to conduct a corrective action program as part of the standardized permit application to be submitted to the Department of Toxic Substances Control."

"I certify under penalty of law that this document and all attachments were prepared under my direction or supervision in accordance with a system designed to assure that qualified personnel properly gather and evaluate the information submitted. Based on my inquiry of the person or persons who will manage the system or those directly responsible for gathering the information, the information is, to the best of my knowledge and belief, true, accurate and complete. I am aware that there are significant penalties for submitting false information, including the possibility of fines and imprisonment for known violations."

Joe Samuelian	President

Name (Print or Type)	Title
Joe Samuelian	9/14/16
Signature	Date Signed

II. LAND OWNER CERTIFICATION

I [We] certify under penalty of law that I [we] am [are] familiar with the operations conducted by Joe Samuelian [Names of Operators] of Atlas Precious Metals, Inc. [Name of Facility] at 640 South Hill Street, Suite 743, Los Angeles, CA 90014 [address] on the property owned by Los Angeles Investment Company [owner's name or his/her designee], that I [we] have reviewed this permit application, and to the best on my [our] knowledge, information, and belief, find it to be true and accurate. I [We] understand this application is being submitted for the purpose of obtaining a Standardized Permit to operate a hazardous waste storage and treatment facility.

I [We] understand fully that I [we], as the land owner, located thereon, am [are] jointly and severally responsible for compliance with applicable provisions of the California Health and Safety Code, its implementing regulations and any permit issued pursuant to the applications of these regulations.

Peklar A. Pilanjian	Member		
Name (print or type)	Title	Name (print or type)	Title
Signature	Date	Signature	Date

HAZARDOUS WASTE FACILITY STANDARDIZED PERMIT UNIT-SPECIFIC FORM

(NOTE: copy this form, and complete a separate form for each hazardous waste management unit that is or will be regulated under the Standardized Permit)

UNIT NAME In-Process Storage Area

I. STORAGE AREA

DIMENSIONS OF CONTAINER STORAGE AREA OR TANK FARM (length and width)	PROCESS CODE	# OF CONTAINERS OR TANKS	TOTAL STORAGE VOLUME	UNIT OF MEASURE
6 feet x 9 feet	S1	up to 15 Containers	1500	pounds

II. WASTE STORED

WASTE CODE(S)		WASTE DESCRIPTION	PROCESS CODE(S)	MAX. CONCENTRATION	ESTIMATED QUANTITY	UNIT OF MEASURE
RCRA	CA					
D007	172	Jewelry Polishing and Sweeps	S1		1500	Pounds

(Modify the form if more than 5 waste streams are stored in this unit)

III. DESCRIPTION AND LOCATION OF STORAGE UNIT

This is a 6 feet by 9 feet area used to store the processed jewelry sweeps prior to the generator's acceptance of the assay result. The In-Process Storage Area is located at the east end of the facility. The maximum storage capacity of this unit is 1,500 pounds. The processed jewelry sweeps are stored in 5, 10, 15 and 35 gallon containers/drums. Each container/drum represents an individual processed batch. All processed jewelry sweeps are solids. No secondary containment is required. The typical storage time is less than one week but will never exceed one year storage limitation.

HAZARDOUS WASTE FACILITY STANDARDIZED PERMIT UNIT-SPECIFIC FORM

(NOTE: copy this form, and complete a separate form for each hazardous waste management unit that is or will be regulated under the Standardized Permit)

UNIT NAME Shipping Area

I. STORAGE AREA

DIMENSIONS OF CONTAINER STORAGE AREA OR TANK FARM (length and width)	PROCESS CODE	# OF CONTAINERS OR TANKS	TOTAL STORAGE VOLUME	UNIT OF MEASURE
5 feet x 9 feet	S1	up to 6 containers	1500	pounds

II. WASTE STORED

WASTE CODE(S)		WASTE DESCRIPTION	PROCESS CODE(S)	MAX. CONCENTRATION	ESTIMATED QUANTITY	UNIT OF MEASURE
RCRA	CA					
D007	172	Jewelry Polishing and Sweeps	S1		1500	pounds

(Modify the form if more than 5 waste streams are stored in this unit)

III. DESCRIPTION AND LOCATION OF STORAGE UNIT

This is a 5 feet by 9 feet area used to store the processed jewelry sweeps after the generator accepts the assay results and prior to shipment by a licensed hazardous waste transporter to a recycling facility. The Shipping Area is located at the west end of the facility. The maximum storage capacity of this unit is 1500 pounds. The processed jewelry sweeps are stored in 35 or 55 gallon DOT approved containers.

All processed jewelry sweeps are solids. No secondary containment is required. The typical storage time is two weeks but will never exceed the one year storage limitation.

HAZARDOUS WASTE FACILITY STANDARDIZED PERMIT UNIT-SPECIFIC FORM

UNIT NAME Roasting Kiln #1

I. TREATMENT PROCESS

PROCESS DESCRIPTION	PROCES S CODE	# OF EQUIPEMENT	PROCESS DESIGN CAPACITY	UNIT OF MEASURE
Drying	X03	1	50	pounds

II. WASTE TREATED

WASTE CODE(S)		WASTE DESCRIPTION	PROCESS CODE(S)	MAX. CONCENTRATION	ESTIMATED QUANTITY	UNIT OF MEASURE
RCRA	CA					
D007	172	Jewelry Polishing and Sweeps	X03		50	pounds

(Modify the form if more than 5 waste streams are treated by this process)

III. NARRATIVE DESCRIPTION OF TREATMENT UNIT

This is one of two kilns measuring 32 inches by 40 inches by 32 inches used to dry jewelry sweeps using natural gas as the source of heat. The unit employs an afterburner measuring 17 inches by 17 inches by 37 inches. The afterburner operates at 1800 degrees fahrenheit. The capacity of this unit is 3,000 pounds per month. This is a batch operation with the typical batch size of 40 to 50 pounds per batch. The unit operates at up to 1,335 degrees Fahrenheit. The typical drying cycle is two hours.

HAZARDOUS WASTE FACILITY STANDARDIZED PERMIT UNIT-SPECIFIC FORM

UNIT NAME Roasting Kiln #2

I. TREATMENT PROCESS

PROCESS DESCRIPTION	PROCES S CODE	# OF EQUIPEMENT	PROCESS DESIGN CAPACITY	UNIT OF MEASURE
Drying	X03	2	50	pounds

II. WASTE TREATED

WASTE CODE(S)		WASTE DESCRIPTION	PROCESS CODE(S)	MAX. CONCENTRATION	ESTIMATED QUANTITY	UNIT OF MEASURE
RCRA	CA					
D007	172	Jewelry Polishing and Sweeps	X03		50	Pounds

(Modify the form if more than 5 waste streams are treated by this process)

III. NARRATIVE DESCRIPTION OF TREATMENT UNIT

This is one of two kilns measuring 32 inches by 40 inches by 32 inches (see Attachments 4 and 5) used to dry jewelry sweeps using natural gas as the source of heat. The unit employs an afterburner measuring 17 inches by 17 inches by 37 inches. The afterburner operates at 1800 degrees fahrenheit. The capacity of this unit is 3,000 pounds per month. This is a batch operation with the typical batch size of 40 to 50 pounds per batch. The unit operates at up to 1,335 degrees Fahrenheit. The typical drying cycle is two hours.

HAZARDOUS WASTE FACILITY STANDARDIZED PERMIT UNIT-SPECIFIC FORM

UNIT NAME Bico-Braun Ball Mill #1

I. TREATMENT PROCESS

PROCESS DESCRIPTION	PROCES S CODE	# OF EQUIPEMENT	PROCESS DESIGN CAPACITY	UNIT OF MEASURE
Milling	X02	3	30	Pounds

II. WASTE TREATED

WASTE CODE(S)		WASTE DESCRIPTION	PROCESS CODE(S)	MAX. CONCENTRATION	ESTIMATED QUANTITY	UNIT OF MEASURE
RCRA	CA					
D007	172	Jewelry Polishing and Sweeps	X02		30	Pounds

(Modify the form if more than 5 waste streams are treated by this process)

III. NARRATIVE DESCRIPTION OF TREATMENT UNIT

This is one of two ball mills measuring 12 inches in diameter by 12 inches in length used to reduce the size of the sweeps to less than 60 mesh size. The capacity of this unit is 3,000 pounds per month. The typical cycle processes a charge of 30 pounds in 15 minutes. This unit is a standard ball mill manufactured by Bico-Braun and is purchased as a complete off-the-shelf unit.

HAZARDOUS WASTE FACILITY STANDARDIZED PERMIT UNIT-SPECIFIC FORM

UNIT NAME Bico-Braun Ball Mill #2

I. TREATMENT PROCESS

PROCESS DESCRIPTION	PROCES S CODE	# OF EQUIPEMENT	PROCESS DESIGN CAPACITY	UNIT OF MEASURE
Milling	X02	4	30	Pounds

II. WASTE TREATED

WASTE CODE(S)		WASTE DESCRIPTION	PROCESS CODE(S)	MAX. CONCENTRATION	ESTIMATED QUANTITY	UNIT OF MEASURE
RCRA	CA					
D007	172	Jewelry Polishing and Sweeps	X02		30	Pounds

(Modify the form if more than 5 waste streams are treated by this process)

III. NARRATIVE DESCRIPTION OF TREATMENT UNIT

This is one of two ball mills measuring 12 inches in diameter by 12 inches in length used to reduce the size of the sweeps to less than 60 mesh size. The capacity of this unit is 3,000 pounds per month. The typical cycle processes a charge of 30 pounds in 15 minutes. This unit is a standard ball mill manufactured by Bico-Braun and is purchased as a complete off-the-shelf unit.

HAZARDOUS WASTE FACILITY STANDARDIZED PERMIT UNIT-SPECIFIC FORM

UNIT NAME Vibratory Screen #1

I. TREATMENT PROCESS

PROCESS DESCRIPTION	PROCES S CODE	# OF EQUIPEMENT	PROCESS DESIGN CAPACITY	UNIT OF MEASURE
Separator	X02	5	50	Pounds

II. WASTE TREATED

WASTE CODE(S)		WASTE DESCRIPTION	PROCESS CODE(S)	MAX. CONCENTRATION	ESTIMATED QUANTITY	UNIT OF MEASURE
RCRA	CA					
D007	172	Jewelry Polishing and Sweeps	X02		50	Pounds

(Modify the form if more than 5 waste streams are treated by this process)

III. NARRATIVE DESCRIPTION OF TREATMENT UNIT

This is an 18-inch diameter screening separator manufactured by Sweco and is used to separate sweeps into less than 60 mesh size. The oversize particles that are greater than 60 mesh size are separated out. The typical cycle is less than 30 minutes. This is a batch process with the typical batch being 50 pounds. This is a standard separator manufactured by Sweco and is purchased as a complete off-the-shelf unit.

HAZARDOUS WASTE FACILITY STANDARDIZED PERMIT UNIT-SPECIFIC FORM

UNIT NAME Vibratory Screen #2

I. TREATMENT PROCESS

PROCESS DESCRIPTION	PROCES S CODE	# OF EQUIPEMENT	PROCESS DESIGN CAPACITY	UNIT OF MEASURE
Separator	X02	6	50	Pounds

II. WASTE TREATED

WASTE CODE(S)		WASTE DESCRIPTION	PROCESS CODE(S)	MAX. CONCENTRATION	ESTIMATED QUANTITY	UNIT OF MEASURE
RCRA	CA					
D007	172	Jewelry Polishing and Sweeps	X02		50	Pounds

(Modify the form if more than 5 waste streams are treated by this process)

III. NARRATIVE DESCRIPTION OF TREATMENT UNIT

This is an 18-inch diameter screening separator manufactured by Sweco and is used to separate jewelry sweep particles into less than 60 mesh size. The oversize particles that are greater than 60 mesh size are separated. The typical cycle is less than 30 minutes. This is a batch process with the typical batch being 50 pounds.

HAZARDOUS WASTE FACILITY STANDARDIZED PERMIT UNIT-SPECIFIC FORM

UNIT NAME Cone Blender

I. TREATMENT PROCESS

PROCESS DESCRIPTION	PROCES S CODE	# OF EQUIPEMENT	PROCESS DESIGN CAPACITY	UNIT OF MEASURE
Blender	X02	7	400	Pounds

II. WASTE TREATED

WASTE CODE(S)		WASTE DESCRIPTION	PROCESS CODE(S)	MAX. CONCENTRATION	ESTIMATED QUANTITY	UNIT OF MEASURE
RCRA	CA					
D007	172	Jewelry Polishing and Sweeps	X02		400	Pounds

(Modify the form if more than 5 waste streams are treated by this process)

III. NARRATIVE DESCRIPTION OF TREATMENT UNIT

This is a 30-inch diameter cone blender manufactured by Seport and is used to blend the less than 60 mesh jewelry sweeps to ensure that a representative sample can be taken for determining the precious metal content. The typical blending cycle is one hour. This is a batch process with the typical batch being 50 pounds. The maximum batch size is 400 pounds. This is a standard cone blender manufactured by Seport and is purchased as a complete off-the shelf unit.

SUMMARY OF EQUIPMENT INFORMATION (EXCLUDING STORAGE DRUMS/CONTAINERS)

FACILITY EQUIPMENT NAME	PROCESS CODE	CAPACITY	DIMENSION	CONSTRUCTION MATERIAL	YEAR BUILT
Roasting Kiln #1	X03	50 lb	32" x 40" x 32"	Steel & brick	Unknown
Roasting Kiln #2	X03	50 lb	32" x 40" x 32"	Steel & brick	Unknown
Ball Mill #1	X02	30 lb	12" x 12"	Carbon Steel	Unknown
Ball Mill #2	X02	30 lb	12" x 12"	Carbon Steel	Unknown
Screen #1	X02	50 lb	18" diameter	Carbon Steel	Unknown
Screen #2	X02	50 lb	24" diameter	Carbon Steel	Unknown
Cone blender	X02	400 lb	30" x 40"	Carbon Steel	Unknown

(Modify the form and insert additional rows if needed)

CODES TO BE USED IN THESE TABLES:

FACILTY EQUIPMENT NAME: The name or identification assigned by the Facility, e.g. Tank A, Furnace #1, etc.

PROCESS CODES: S1 – Storage in containers
S2 - Storage in tanks
T1 – Treatment in containers
T2 - Treatment in tanks

CAPACITY: maximum equipment storage capacity or equipment monthly treatment rate

DIMENSIONS:
Container or drums for treatment - diameter and height in inches (in), feet (ft),
Tanks, reactors, vats, furnaces, filter press, etc. - diameter, length, width, and height in inches (in), feet (ft),
Other Types of Units - appropriate units of measure; please clearly define the units.

CONSTRUCTION MATERIAL: carbon steel, stainless steel, fiberglass, etc.

YEAR BUILT: Enter the year when the equipment was built, if known; otherwise enter “unknown”.

SUMMARY OF EQUIPMENT INFORMATION (EXCLUDING STORAGE DRUMS/CONTAINERS)

FACILITY EQUIPMENT NAME	PROCESS CODE	CAPACITY	DIMENSION	CONSTRUCTION MATERIAL	YEAR BUILT
In process storage	S1	1,500 lb	6' x 9'	wood floor over concrete	unknown
Shipping storage	S1	1,500 lb	5' x 9'	wood pallets over concrete	unknown

(Modify the form and insert additional rows if needed)

CODES TO BE USED IN THESE TABLES:

FACILTY EQUIPMENT NAME: The name or identification assigned by the Facility, e.g. Tank A, Furnace #1, etc.

PROCESS CODES: S1 – Storage in containers
S2 - Storage in tanks
T1 – Treatment in containers
T2 - Treatment in tanks

CAPACITY: maximum equipment storage capacity or equipment monthly treatment rate

DIMENSIONS:
Container or drums for treatment - diameter and height in inches (in), feet (ft),
Tanks, reactors, vats, furnaces, filter press, etc. - diameter, length, width, and height in inches (in), feet (ft),
Other Types of Units - appropriate units of measure; please clearly define the units.

CONSTRUCTION MATERIAL: carbon steel, stainless steel, fiberglass, etc.

YEAR BUILT: Enter the year when the equipment was built, if known; otherwise enter “unknown”.

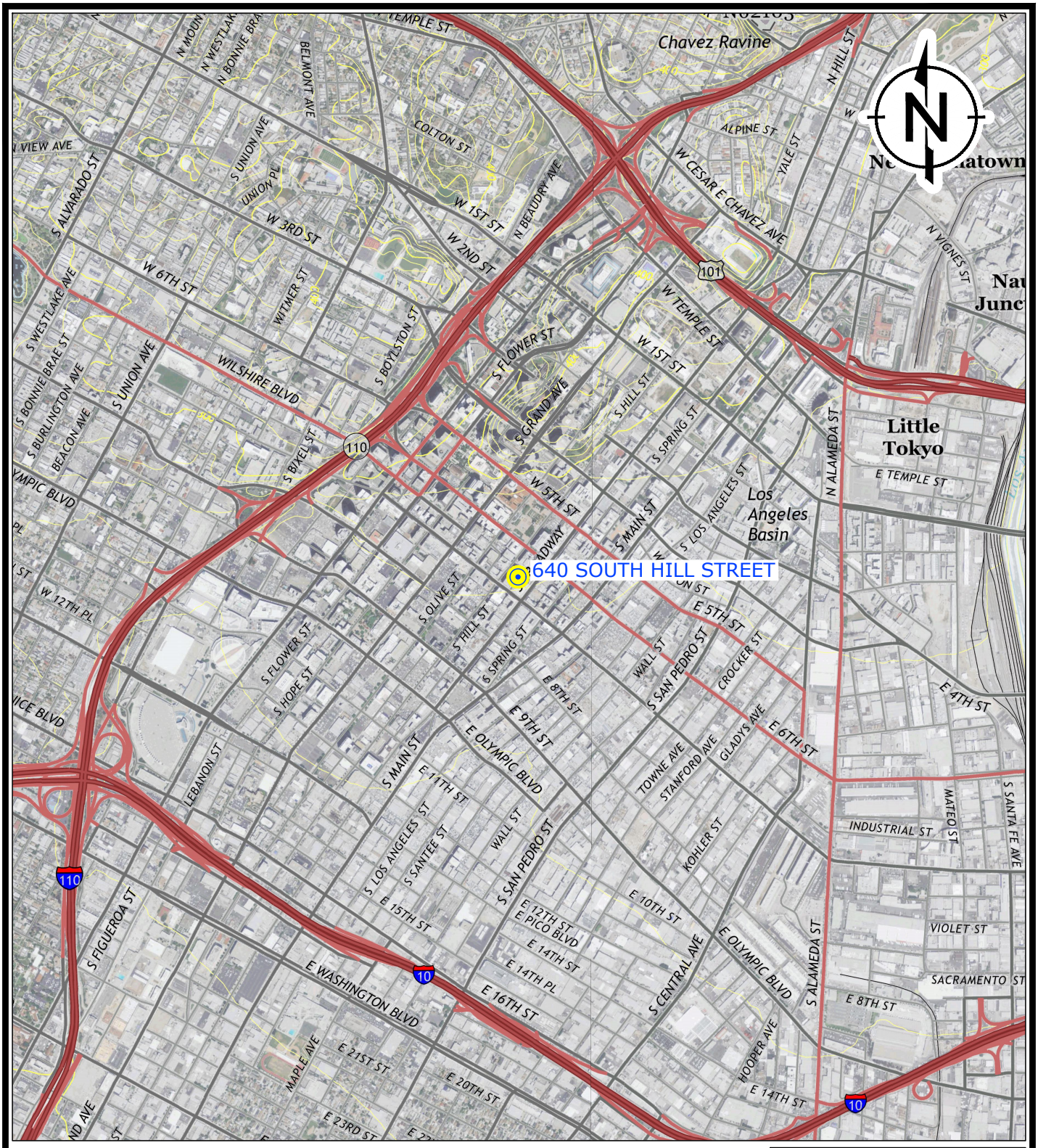

0 1/2 1

SCALE IN MILES

2000 0 2000 4000

SCALE IN FEET

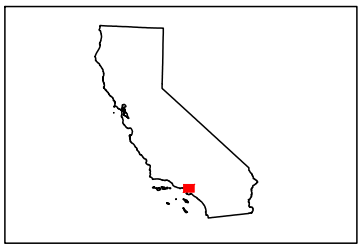

QUADRANGLE KEY MAP

NOTES:
CONTOUR INTERVAL 20 FEET

SOURCE:
USGS 2013 7.5 MINUTE SERIES HOLLYWOOD AND LOS ANGELES, CA TOPOGRAPHIC QUADRANGLES.
MAP SCALE: 1:24,000. SITE LOCATION: N: 34.04601° W: 118.253481° WGS84.

RAMBOLL ENVIRON

DRAFTED BY: KPM | DATE: 1/25/2016

SITE LOCATION MAP

ATLAS PRECIOUS METALS, INC.
640 SOUTH HILL STREET
LOS ANGELES, CALIFORNIA

FIGURE
1

PROJECT: 0838578A

KMAUGHAN 1/27/16 F:\0838578_G&M\PERMIT RENEWAL < SITE LOCATION_0838578 >

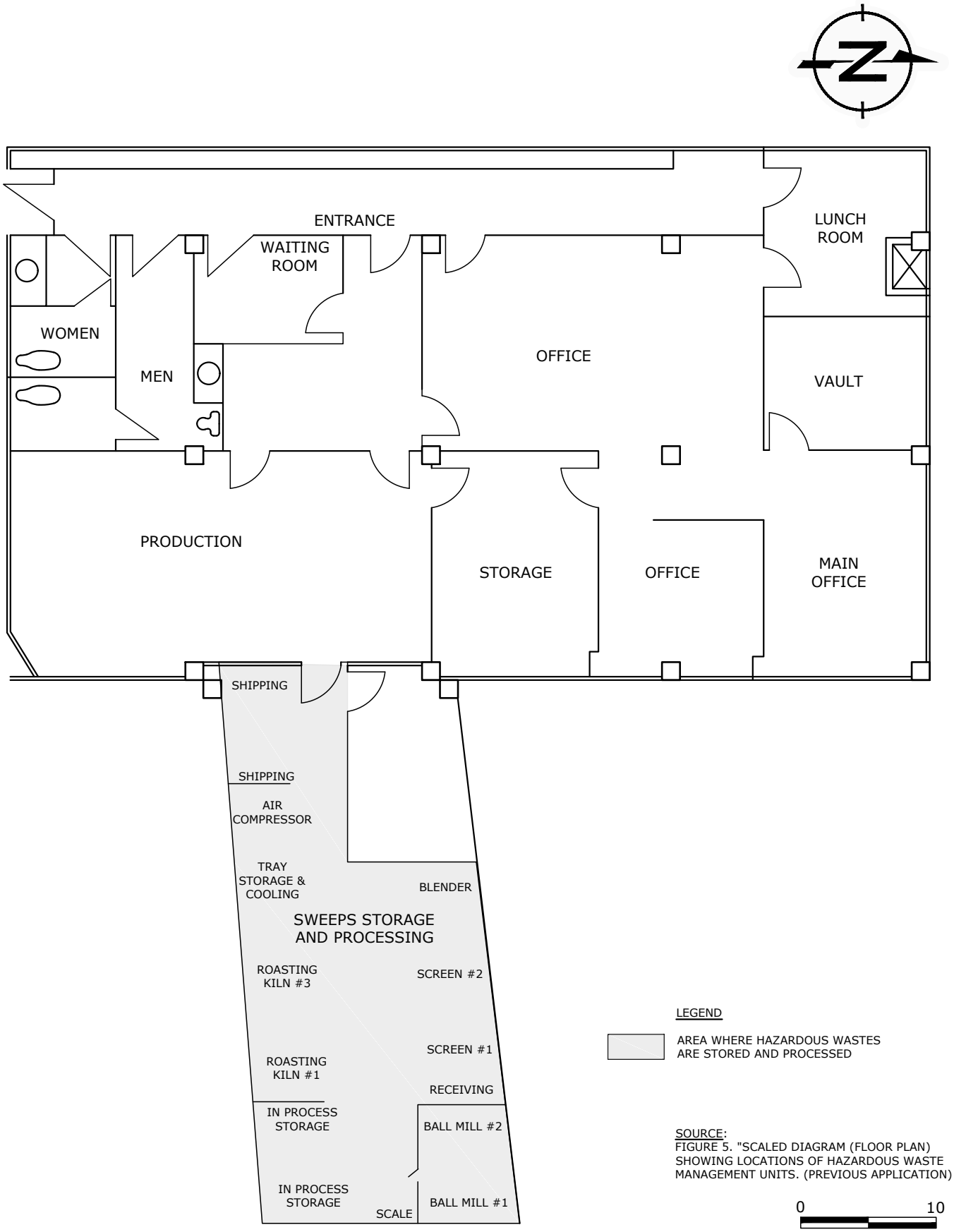

LEGEND

AREA WHERE HAZARDOUS WASTES ARE STORED AND PROCESSED

SOURCE:
FIGURE 5. "SCALED DIAGRAM (FLOOR PLAN) SHOWING LOCATIONS OF HAZARDOUS WASTE MANAGEMENT UNITS. (PREVIOUS APPLICATION)

0 10
SCALE IN FEET (APPROXIMATE)

RAMBOLL ENVIRON

DRAFTED BY: KPM | DATE: 1/28/2016

FACILITY FLOOR PLAN

ATLAS PRECIOUS METALS, INC.
640 SOUTH HILL STREET
LOS ANGELES, CALIFORNIA

FIGURE 2

PROJECT: 0838578A

KMAUGHAN 1/29/16 F:\0838578_G&M\PERMIT RENEWAL < FACILITY FLOOR PLAN_0838578 >

ATTACHMENT C
AIR PERMITS

South Coast
Air Quality Management District
21865 Copley Drive, Diamond Bar, CA 91765-4178
(909) 396-2000 • www.aqmd.gov

DATE:12/17/2013

EQUIPMENT LOCATED AT: 640 S HILL ST SUITE 783
LOS ANGELES,CA 90014

LEGAL OWNER OR OPERATOR CO. ID: 166419
ATLAS PRECIOUS METALS, INC.
640 S HILL ST SUITE 783
LOS ANGELES,CA,90014

PERMIT/APPLICATION RENEWAL

PERMIT/ APPL NBR	EQUIPMENT DESCRIPTION	NEXT RENEWAL DATE
BILLING YEAR: 2013		
G11863	KILN NAT GAS	01/01/2015
G11864	KILN NAT GAS	01/01/2015

South Coast
Air Quality Management District
21865 Copley Drive, Diamond Bar, CA 91765-4178
(909) 396-2000 • www.aqmd.gov

ACKNOWLEDGEMENT OF ANNUAL OPERATING PERMIT FEE PAYMENT

Dear Permit Holder:

This letter acknowledges your recent annual operating permit renewal fee payment for the permits to operate or applications listed on the enclosed attachment. The next renewal date for each permit or application is stated on the attachment. For facilities that have been issued a RECLAIM or Title V facility permit, the facility permit serves as a comprehensive permit to operate the equipment listed on the facility permit.

This payment acknowledgment does NOT replace your original Permit to Operate, and you should NOT discard the original permit.

You are required by SCAQMD Rule 206 to affix the original Permit to Operate or a legible facsimile of the permit upon the equipment so that the permit number, equipment description, and the operating conditions are clearly visible.

If you have any questions about this permit renewal acknowledgement letter please call SCAQMD's Billing Services at (909) 396-2900; or from inside California, you may call toll free at (866) 888-8838. If you need a photocopy of your permit to operate please contact the Public Records section at (909) 396-3700. If you need a certified copy of an active permit to operate, you may request a certified copy by submitting the request in writing. A fee of $24.96 must accompany your written request. (If your facility is a RECLAIM or Title V facility, you may request a certified copy of your RECLAIM or Title V facility permit by submitting the request in writing. A fee of $24.96 for the first page and $1.76 for each additional page in the facility permit must accompany your written request.) The written request and the fee for a certified copy of an active permit should be sent to SCAQMD, P.O. Box 4944, Diamond Bar, CA 91765-0944.

SOUTH COAST AIR QUALITY MANAGEMENT DISTRICT

ANNUAL OPERATING FEES INVOICE

AQMD

INVOICE NO. 2889896

PAGE: 1

California Health and Safety Code Section 40510 and South Coast Air Quality Management District Rule 301 authorizes SCAQMD to charge permit fees on the equipment identified below.

EQUIPMENT LOCATED AT: 640 S HILL ST SUITE 783
LOS ANGELES CA 90014

FACILITY ID: 166419

INVOICE DATE : 11/3/15

LEGAL OWNER / OPERATOR LOCATED AT: ATLAS PRECIOUS METALS, INC.
640 S HILL ST SUITE 783
LOS ANGELES CA 90014

DUPLICATE COPY

Transaction Number	Transaction Date	Reference Number	Description	Transaction Amount	Transaction Balance
9030893	11/03/15	G11863	KILN NAT GAS	1241.18	1241.18
9030894	11/03/15	G11864	KILN NAT GAS	1241.18	1241.18

CHECK N° A/X
AMOUNT 2482.36
DATE 1/4/16

REMARKS

Please return the duplicate copy of this invoice with your remittance to ensure proper credit to your account. Returned checks will be subject to a $25.00 service charge.

INVOICE TOTAL : $2482.36

If payment not received by **1/1/2016** application/permit will be delinquent.If payment not received by **2/1/2016** application/permit will expire.Operation of equipment without a permitis a violation of District Rules and state law for every day of operation.

Please return duplicate copy with remittance. Make check payable to South Coast AQMD.

For questions or information, call Billing Services at 909-396-2900; within California, you may call toll free 866-888-8838. Send email inquiries to billingservices@aqmd.gov.

Mail remittance to: P.O. Box 4943 Diamond Bar CA, 91765-0943

AQMD

SOUTH COAST AIR QUALITY MANAGEMENT DISTRICT

EMISSIONS FEES INVOICE

INVOICE NO. 2891064

PAGE: 1

California Health and Safety Code Section 40510 and South Coast Air Quality Management District Rule 301(e) authorize SCAQMD to charge the fee described below.

EQUIPMENT LOCATED AT: 640 S HILL ST SUITE 783
LOS ANGELES CA 90014

FACILITY ID: 166419

INVOICE DATE : 11/3/15

LEGAL OWNER / OPERATOR LOCATED AT: ATLAS PRECIOUS METALS, INC.
640 S HILL ST SUITE 783
LOS ANGELES CA 90014

ORIGINAL INVOICE

Transaction Number	Transaction Date	Reference Number	Description	Transaction Amount	Transaction Balance
9032326	11/03/15	FY15-16	FLAT FEE FOR LAST FISCAL YEAR EMISSIONS	121.44	121.44

PAID
CHECK NO. A/X
AMOUNT 121.44
DATE 11/4/16

REMARKS

Please return the duplicate copy of this invoice with your remittance to ensure proper credit to your account. Returned checks will be subject to a $25.00 service charge.

INVOICE TOTAL : $121.44

If payment not received by **1/1/2016** a 5% late payment surcharge will be imposed. Unpaid emissions fees may result in revocation of all permits to operate on the premises.

Please return duplicate copy with remittance. Make check payable to South Coast AQMD.

For questions or information, call Billing Services at 909-396-2900; within California, you may call toll free 866-888-8838. Send email inquiries to billingservices@aqmd.gov.

Mail remittance to: P.O. Box 4943 Diamond Bar CA, 91765-0943

SCAQMD Online Payment

Thank you for your payment.

Please print this receipt and keep it for your records.

Facility ID : 166419

Facility Name : ATLAS PRECIOUS METALS, INC.

Invoice Amount	Invoice Type	Amount Due
2772511	Emissions	$5.99
2889896	Annual Renewal	$2,482.36
2891064	Emissions	$121.44
	Payment Amount:	$2,609.79
	To use A/X Convenience Fee:	$58.72
	Total Payment Amount:	**$2,668.51**

Receipt Number: 3660563027

Transaction Date: 01/04/2016 03:49 PM

Payment Type:

**********1172

Terms of Payment | Terms of Use | Privacy & Security Policy

SOUTH COAST AIR QUALITY MANAGEMENT DISTRICT
21865 Copley Drive, Diamond Bar, CA 91765

PERMIT TO OPERATE

Page 1
Permit No.
G11854
A/N 517268

This initial permit must be renewed ANNUALLY unless the equipment is moved, or changes ownership.
If the billing for the annual renewal fee (Rule 301.f) is not received by the expiration date, contact the District.

ID 166419

Legal Owner or Operator: ATLAS PRECIOUS METALS, INC.
640 S HILL ST, SUITE 783
LOS ANGELES, CA 90014

Equipment Location: 640 S HILL ST, SUITE 783, LOS ANGELES, CA 90014

Equipment Description :

KILN NO. 1, BAKER SUPPLY, MODEL NO. GK1, SERIAL NO. 1, WITH TWO 250,000 BTU/HR NATURAL GAS FIRED LOW NOX BURNERS, AND AN INTEGRAL 250,000 BTU/HR NATURAL GAS FIRED AFTERBURNER.

Conditions :

1. OPERATION OF THIS EQUIPMENT SHALL BE CONDUCTED IN ACCORDANCE WITH ALL DATA AND SPECIFICATIONS SUBMITTED WITH THE APPLICATION UNDER WHICH THIS PERMIT IS ISSUED UNLESS OTHERWISE NOTED BELOW.
2. THIS EQUIPMENT SHALL BE PROPERLY MAINTAINED AND KEPT IN GOOD OPERATING CONDITION AT ALL TIMES.
3. THIS EQUIPMENT SHALL BE FIRED ONLY WITH NATURAL GAS.
4. THIS EQUIPMENT SHALL NOT USE MORE THAN 80,000 CUBIC FEET OF NATURAL GAS IN ANY CALENDAR MONTH.
5. THE KILN SHALL NOT BE OPERATED UNLESS THE AFTERBURNER IS IN FULL OPERATION.
6. THE AFTERBURNER SHALL BE OPERATED AT A TEMPERATURE OF 1800 DEGREES FAHRENHEIT OR GREATER.
7. A CONTINUOUS TEMPERATURE MEASURING DEVICE AND TEMPERATURE RECORDING DEVICE SHALL BE INSTALLED TO MONITOR THE OPERATING TEMPERATURE OF THE AFTERBURNER.
8. THE OPERATOR SHALL INSTALL AND MAINTAIN A NON-RESETTABLE, TOTALIZING FUEL METER ON THIS EQUIPMENT.
9. MATERIALS PROCESSED IN THIS EQUIPMENT SHALL NOT CONTAIN ANY OF THE COMPOUNDS IDENTIFIED AS CARCINOGENIC AIR CONTAMINANTS IN RULE 1401 AS AMENDED MAY 03, 2002.
10. MATERIALS CONTAINING PLASTIC, RUBBER, GREASES OR OILS SHALL NOT BE PROCESSED IN THIS EQUIPMENT.

FILE COPY

SOUTH COAST AIR QUALITY MANAGEMENT DISTRICT
21865 Copley Drive, Diamond Bar, CA 91765

PERMIT TO OPERATE

Page 2
Permit No.
G11864
A/N 517261

11. RECORDS SHALL BE MAINTAINED BY THE OPERATOR TO DEMONSTRATE COMPLIANCE WITH CONDITIONS 4 AND 6 ABOVE. SUCH RECORDS SHALL BE KEPT FOR AT LEAST TWO YEARS AND MADE AVAILABLE UPON THE REQUEST OF THE DISTIRCT PERSONNEL.

NOTICE

IN ACCORDANCE WITH RULE 206, THIS PERMIT TO OPERATE OR COPY SHALL BE POSTED ON OR WITHIN 8 METERS OF THE EQUIPMENT.

THIS PERMIT DOES NOT AUTHORIZE THE EMISSION OF AIR CONTAMINANTS IN EXCESS OF THOSE ALLOWED BY DIVISION 26 OF THE HEALTH AND SAFETY CODE OF THE STATE OF CALIFORNIA OR THE RULES OF THE AIR QUALITY MANAGEMENT DISTRICT. THIS PERMIT CANNOT BE CONSIDERED AS PERMISSION TO VIOLATE EXISTING LAWS, ORDINANCES, REGULATIONS OR STATUTES OF OTHER GOVERNMENT AGENCIES.

EXECUTIVE OFFICER

Doris M. Bailey

By Doris M.Bailey/LK04
2/11/2011

FILE COPY

SOUTH COAST AIR QUALITY MANAGEMENT DISTRICT
21865 Copley Drive, Diamond Bar, CA 91765

Page 1
Permit No.
G11863
A/N 517267

PERMIT TO OPERATE

This initial permit must be renewed ANNUALLY unless the equipment is moved, or changes ownership.
If the billing for the annual renewal fee (Rule 301 f) is not received by the expiration date, contact the District.

ID 166419

Legal Owner
or Operator: ATLAS PRECIOUS METALS, INC.
640 S HILL ST, SUITE 783
LOS ANGELES, CA 90014

Equipment Location: 640 S HILL ST, SUITE 783, LOS ANGELES, CA 90014

Equipment Description :

KILN NO. 2, BAKER SUPPLY, MODEL NO. GK1, SERIAL NO. 1, WITH TWO 250,000 BTU/HR NATURAL GAS FIRED LOW NOX BURNERS, AND AN INTEGRAL 250,000 BTU/HR NATURAL GAS FIRED AFTERBURNER.

Conditions :

1. OPERATION OF THIS EQUIPMENT SHALL BE CONDUCTED IN ACCORDANCE WITH ALL DATA AND SPECIFICATIONS SUBMITTED WITH THE APPLICATION UNDER WHICH THIS PERMIT IS ISSUED UNLESS OTHERWISE NOTED BELOW.
2. THIS EQUIPMENT SHALL BE PROPERLY MAINTAINED AND KEPT IN GOOD OPERATING CONDITION AT ALL TIMES.
3. THIS EQUIPMENT SHALL BE FIRED ONLY WITH NATURAL GAS.
4. THIS EQUIPMENT SHALL NOT USE MORE THAN 80,000 CUBIC FEET OF NATURAL GAS IN ANY CALENDAR MONTH.
5. THE KILN SHALL NOT BE OPERATED UNLESS THE AFTERBURNER IS IN FULL OPERATION.
6. THE AFTERBURNER SHALL BE OPERATED AT A TEMPERATURE OF 1800 DEGREES FAHRENHEIT OR GREATER.
7. A CONTINUOUS TEMPERATURE MEASURING DEVICE AND TEMPERATURE RECORDING DEVICE SHALL BE INSTALLED TO MONITOR THE OPERATING TEMPERATURE OF THE AFTERBURNER.
8. THE OPERATOR SHALL INSTALL AND MAINTAIN A NON-RESETTABLE, TOTALIZING FUEL METER ON THIS EQUIPMENT.
9. MATERIALS PROCESSED IN THIS EQUIPMENT SHALL NOT CONTAIN ANY OF THE COMPOUNDS IDENTIFIED AS CARCINOGENIC AIR CONTAMINANTS IN RULE 1401 AS AMENDED MAY 03, 2002.
10. MATERIALS CONTAINING PLASTIC, RUBBER, GREASE OR OILS SHALL NOT BE PROCESSED IN THIS EQUIPMENT.

FILE COPY

SOUTH COAST AIR QUALITY MANAGEMENT DISTRICT
21865 Copley Drive, Diamond Bar, CA 91765

PERMIT TO OPERATE

Page 2
Permit No.
G31863
A/N 517267

11. RECORDS SHALL BE MAINTAINED BY THE OPERATOR TO DEMONSTRATE COMPLIANCE WITH CONDITIONS 4 AND 6 ABOVE. SUCH RECORDS SHALL BE KEPT FOR AT LEAST TWO YEARS AND MADE AVAILABLE UPON THE REQUEST OF DISTRICT PERSONNEL.

NOTICE

IN ACCORDANCE WITH RULE 206, THIS PERMIT TO OPERATE OR COPY SHALL BE POSTED ON OR WITHIN 8 METERS OF THE EQUIPMENT.

THIS PERMIT DOES NOT AUTHORIZE THE EMISSION OF AIR CONTAMINANTS IN EXCESS OF THOSE ALLOWED BY DIVISION 26 OF THE HEALTH AND SAFETY CODE OF THE STATE OF CALIFORNIA OR THE RULES OF THE AIR QUALITY MANAGEMENT DISTRICT. THIS PERMIT CANNOT BE CONSIDERED AS PERMISSION TO VIOLATE EXISTING LAWS, ORDINANCES, REGULATIONS OR STATUTES OF OTHER GOVERNMENT AGENCIES.

EXECUTIVE OFFICER

Dorris M. Bailey

By Dorris M.Bailey/LK04
2/11/2011

FILE COPY

ATTACHMENT D
REDLINE/STRIKEOUT OF OPERATIONS PLAN

STANDARDIZED PERMIT APPLICATION OPERATION PLAN

ATLAS PRECIOUS METALS, INC.
640 SOUTH HILL STREET, SUITE 743
LOS ANGELES, CA 90014

REDLINE/STRIKEOUT

Prepared for:
Atlas Precious Metals, Inc.
Los Angeles, California

Prepared by:
Ramboll Environ US Corporation
Emeryville, California

Date:
December 30, 2016

Project Number:
08-38578A

RAMBOLL ENVIRON

TABLE OF CONTENTS

1.	FACILITY IDENTIFICATION / LOCATION	1
2.	FACILITY OPERATION AND HAZARDOUS WASTE MANAGEMENT	3
3.	WASTE ANALYSIS PLAN	6
4.	FACILITY DESIGN - STORAGE	11
5.	FACILITY DESIGN - TREATMENT	14
6.	TRAINING PLAN	22
7.	SECURITY	26
8.	INSPECTION PLAN	27
9.	CONTINGENCY PLAN	32
10.	CLOSURE PLAN	38
11.	CERTIFICATIONS	48~~44~~
12.	FINANCIAL RESPONSIBILITY	53~~49~~

FIGURES

Figure 1	Site Location Map
Figure 2	Tax Assessor Map
Figure 3	Facility Floor Plan
Figure 4	Sweeps Storage and Processing Room
Figure 5	Flowchart for Processing Jewelry Sweeps
Figure 6	Emergency Response Equipment and Evacuation Routes
~~Figure 7~~	~~Closure Sampling~~

EXHIBITS

Exhibit 1	Generator Waste Certification
Exhibit 2	Refining Receipt
Exhibit 3	Safety Data Sheets for Polishing Compound
Exhibit 4	Laboratory Analysis Results
Exhibit 5	Example Post-Processing Assay
Exhibit 6	Trust Agreement

REDLINE/STRIKEOUT

REDLINE/STRIKEOUT

1. FACILITY IDENTIFICATION / LOCATION

1.1 FACILITY IDENTIFICATION

Atlas Precious Metals, Inc.
640 South Hill Street, Suite 743
Los Angeles, California 90014
(213) 622-9995

EPA ID number CAL000098454

The facility is located within a commercial zoning area with zoning designation F1. Neighboring businesses consist of jewelry merchants. The nearest schools, residences, and hospitals are approximately one mile away from the facility.

This application is for a permit renewal. No changes to the facility or to facility operations are planned.

1.2 PREPARER OF STANDARDIZED PERMIT APPLICATION

Ramboll Environ US Corporation
Renée van de Griend, PhD, PE
(541) 386-3411

~~September 14~~December 30, 2016

Signature

Date

REDLINE/STRIKEOUT

1.3 OWNER / OPERATOR SIGNATURES AND CERTIFICATION

I certify under penalty of law that this document and all attachments were prepared under my direction or supervision in accordance with a system designed to assure that qualified personnel properly gather and evaluate the information submitted. Based on my inquiry of the person or persons who manage the system, or those persons directly responsible for gathering the information, the information submitted is, to the best of my knowledge and belief, true, accurate, and complete. I further certify that the property owner has been informed that a hazardous waste facility will be operated on the premises. I am aware that there are significant penalties for submitting false information, including the possibility of fine and imprisonment for knowing violations.

Owner Signature	Print Name	Date
Operator Signature	Print Name	Date

1.4 FACILITY LOCATION MAP AND SITE LAYOUT DIAGRAM

The facility is a leased parcel of approximately 2,970 square feet located on the seventh floor of the St. Vincent Jewelry Center Building in the downtown Los Angeles jewelry district. The facility location is indicated on Figure 1.

1.5 LEGAL DESCRIPTION OF PROPERTY

Assessor parcel number (APN): 5144003042

SUBDIVISION OF BLK 18 ORD'S SURVEY EX OF ST LOTS 13 THRU 20 BLK 18

The assessor's parcel map is shown on Figure 2.

1.6 CONFIDENTIALITY REQUESTS AND JUSTIFICATIONS

Not applicable.

REDLINE/STRIKEOUT

2. FACILITY OPERATION AND HAZARDOUS WASTE MANAGEMENT

Atlas Precious Metals, Inc. (ATLAS) prepares jewelry polishing/sweeps (herein referred to as the material or sweeps) for jewelry manufacturers in the Los Angeles area. The sweeps that are received are usually raw (as produced in the polishing process) or prepared by the manufacturer by drying, and are processed by ATLAS in order to determine the value of the precious metals within the sweeps and to prepare the sweeps for further reclamation. The sweeps are considered to be hazardous waste under federal and California environmental law. Recycling of the sweeps for precious metal content is excluded from federal Resource Conservation and Recovery Act (RCRA) permitting requirements under Title 40, Part 266, Subpart F of the Code of Federal Regulations. This exclusion has not been adopted by the State of California, which requires ATLAS to maintain a standardized permit.

A scaled facility diagram showing areas showing the floorplan of the facility is shown on Figure 3. The Sweeps Storage and Processing Room, which comprises the portion of the facility that is the subject of this Operations Plan, is shaded on Figure 3 and shown on a larger scale on Figure 4. ATLAS' process consists of the steps described below, as summarized on the simplified process flow diagram presented on Figure 5.

Step 1: Material Receiving

Material is received by ATLAS by one of the following two methods:

- The jewelry manufacturer (generator) transports up to 50 pounds of material with a bill of lading and without a manifest.
- The jewelry manufacturer (generator) ships material to ATLAS via a certified hazardous waste hauler and under uniform hazardous waste manifest.

The jewelry manufacturer (generator) that ships the material to ATLAS must fill out a certification form that states that this material is polishing/sweeps material from their normal manufacturing operation (Exhibit 1). This material is inspected by ATLAS' Production Foreman to verify that the material is similar to previous material received from this manufacturer. On acceptance of the material, the Production Foreman weighs the material and assigns a refining receipt (Exhibit 2) that will remain with the material during the ATLAS process. The Production Foreman then schedules the material for processing.

Step 2: Drying

The accepted material is loaded into stainless steel trays. The typical load per tray is between 40 and 50 pounds. The trays are charged to one of two roaster kilns for drying. The drying cycle is approximately two hours at up to 1, 335 degrees Fahrenheit (°F). The trays are then removed from the kiln and are allowed to cool for approximately two hours on drying racks. The material typically loses between 20 to 30 percent of its original weight in this drying process.

Step 3: Milling

The dry cooled material is processed in one of two Bico-Braun ball mills for size reduction to less than 60 mesh. The typical milling charge is 30 to 40 pounds with a cycle time of 15 to 20 minutes. This reduction is necessary to obtain a reliable sample for an assay to determine the amount of precious metals in the material.

REDLINE/STRIKEOUT

Step 4: Sizing
The milled material must be sized to guarantee that the ultimate assay sample is less than 60 mesh in size. The material is processed in a Sweco Viro-Energy Separator using 60 mesh screens.

Step 5: Blending
The outturn from the sizing step is blended in a Sepor Conical Blender. The material is blended for one hour and then sampled using a sampling probe. The sample size is approximately 1 pound. The blended material is discharged into a container to be transferred to the process storage area.

Step 6: Material Hold and Release
The material is held in the process storage area in individual lots until it has been assayed and the manufacturer has been notified of and agreed with the assay results. The material is then released by the manufacturer, and the released lot is transferred to the shipping area to be consolidated for shipping.

Step 7: Shipping
The individual lots are consolidated in the shipping area prior to manifesting for transportation to a precious metals refiner. The combined manifested lots are shipped on a weekly basis

The equipment and storage areas are summarized on Tables 1 and 2, respectively. Additional equipment details are presented in Section 5.

TABLE 1: EQUIPMENT IDENTIFICATION SUMMARY			
EQUIPMENT	**UNIT ID**	**DIMENSIONS (inches)**	**MAXIMUM CAPACITY (pounds)**
Roasting Kiln #1	1	32 x 40 x 32	50
Roasting Kiln #2	2	32 x 40 x 32	50
Ball Mill #1	3	12 x 12	30
Ball Mill #2	4	12 x 12	30
Screen #1	5	18 (diameter)	50
Screen #2	6	24 (diameter)	50
Blender	7	30 x 40 (cone)	400

REDLINE/STRIKEOUT

TABLE 2: STORAGE AREA SUMMARY				
STORAGE AREA	**UNIT ID**	**DIMENSIONS (feet)**	**MAXIMUM CAPACITY (pounds)**	**CONTAINER SIZE (gallons)**
In process	8	6 x 9	1,500	5, 10, 15, 30
Shipping	9	5 x 9	1,500	30, 55

Procedures used at the facility to prevent undue exposure of personnel to hazardous waste consist of use of personal protective equipment (e.g., gloves, aprons, safety glasses) during personnel handling of sweeps. In addition, air emissions from the kilns are routed to an afterburner that exhausts on the roof. Because the sweeps are in solid form and consist of metals found in jewelry that are designed to be worn next the skin, personnel hazards associated with handling the sweeps are low.

REDLINE/STRIKEOUT

3. WASTE ANALYSIS PLAN

3.1 DESCRIPTION OF WASTE STREAM

ATLAS accepts only one type of waste, Jewelry Polishing and Sweeps, which exhibits the RCRA and California hazardous characteristic of toxicity, as detailed below.

Process or industry that generates the waste: Jewelry Manufacturing

Description: Jewelry polishing and sweeps (sweeps) consist of dust-like material that is grayish in color and that contains precious metals, non-precious metals, and polishing compound associated with the manufacturing of jewelry products. The polishing compound, which comprises approximately 20 to 30 percent of the sweeps, is a non-hazardous material that contains silica, stearic acid, and wax, as indicated on the representative Safety Data Sheets (SDSs) presented in Exhibit 3.

Process that generates the waste: Sweeps are generated by jewelry manufacturers during finishing of jewelry products. Jewelry does not have an acceptable finish after casting in the manufacturing process and the surfaces must be polished. This is accomplished by using a polishing wheel that contains a non-hazardous polishing compound, which results in generation of dust and grindings (sweeps) consisting of precious and nonprecious metals and polishing compound. The sweeps are collected at the manufacturing facilities and managed for recycling for precious metals content. ATLAS' process prepares the sweeps for determination of precious metals content to allow assignment of monetary value prior to delivery of the sweeps to a precious metal recycling facility.

Hazardous constituents: Based on sample analysis (see Section 3.2.5 below), the sweeps have been confirmed to exhibit the RCRA or California hazardous characteristic for toxicity (as specified below) for barium, cadmium, chromium, copper, nickel, silver, and zinc, and, potentially, lead. Other metals that may be present but at concentrations below state or federal hazardous waste thresholds include arsenic, beryllium, cobalt, mercury, molybdenum, and vanadium.

RCRA Waste Code: D007 (chromium)

California Waste Code: 172 (Metal dust and machining waste)

Hazards: Toxicity. The material contains only metals, none of which are in ignitable or reactive form, and nonhazardous polishing compound. The material does not exhibit characteristics of ignitability, reactivity, or corrosivity.

3.2 WASTE ANALYSIS

3.2.1 Parameters for Analysis

The sweeps contain metals and a non-hazardous polishing compound. Accordingly, parameters selected for analysis include metals.

3.2.2 Test Methods

Samples are analyzed for total metals using EPA Method 6010B for California Assessment Manual (CAM) 17 metals except mercury, which is analyzed using EPA Method 7471A.

In order to assess whether the sweeps exhibit the RCRA characteristic of toxicity, samples are also analyzed for leachable metals using the Toxicity Characteristic Leaching Procedure (TCLP). The

REDLINE/STRIKEOUT

extraction procedure is conducted in accordance with EPA Method 1311, followed by analysis for metals using EPA Method 6010A and 7471A (mercury only).

In the event that samples are not hazardous for total metals by comparison to the Toxicity Threshold Limit Concentration (TTLC) values or for leachable metals by comparison to TCLP values, samples will also be analyzed for soluble metals using the Waste Extraction Test (WET) for comparison to Soluble Threshold Limit Concentration (STLC) values. If the sampled waste is not hazardous by comparison to STLC values, samples will be analyzed for acute aquatic toxicity using the procedure specified in "Static Acute Bioassay Procedures for Hazardous Waste Samples," California Department of Fish and Game, Water Pollution Control Laboratory, revised November 1988.

3.2.3 Sampling

Representative samples are collected from a container of pre-processed sweeps using a clean scoop. The material is placed into a sealed and labeled sample container for delivery to a California certified environmental analytical laboratory under chain of custody control.

3.2.4 Frequency of Analysis

One representative sample will be collected and analyzed for total metals on an annual basis (i.e., each calendar year) to satisfy DTSC's requirement for periodic waste verification testing.

3.2.5 Results of Sampling and Analysis

ATLAS conducted analysis of two representative samples of pre-processed sweeps in January 2016 to verify waste characteristics of the sweeps received at the facility. Samples were analyzed for total CAM 17 metals for comparison to TTLC thresholds and for leachable RCRA metals using the TCLP. The laboratory results of these analyses are presented in Exhibit 4 and summarized below on Tables 3 and 4. The results of previous total metals test results for samples collected at the facility in 2002 (reported in the original permit application dated December 9, 2010) are also presented on Table 3.

As indicated on Table 3, total metals concentrations of barium, cadmium, chromium, copper, nickel, silver, and zinc exceeded their respective TTLC thresholds in one or more samples, and the sweeps are confirmed to be hazardous waste under California regulations for these constituents. As indicated on Table 3, the totals metals concentrations are also compared to 20 times the TCLP values to assess constituents that could potentially exhibit the RCRA characteristic of toxicity. This multiplier reflects the effective dilution that results from the extraction procedure. These comparisons (when the maximum theoretical leaching potential is applied) suggested that the total metals concentrations of barium, cadmium, chromium, lead, and silver could cause the sweeps to potentially fail TCLP testing. Accordingly TCLP testing was performed. As indicated on Table 4, TCLP testing indicates that only chromium is present above its TCLP threshold.

As indicated on Table 3, totals metals concentrations are also compared to 10 times the STLC to assess additional constituents that may potentially exceed California STLC thresholds for which the sweeps are not already confirmed to be hazardous under the TTLC or TCLP. As indicated on Table 3, the only additional constituent for which the sweeps may be hazardous based on comparison to 10 times the STLC is lead. All other constituents present in concentrations more than 10 times the STLC are already confirmed to be hazardous by total or TCLP concentrations. Additional testing for confirmed STLC exceedances is not warranted, because the sweeps are confirmed by the above-described test results to be hazardous waste under both RCRA and California toxicity criteria. Similarly, acute aquatic toxicity testing is not warranted.

REDLINE/STRIKEOUT

Table 3: Total Metals Concentrations in Sweeps								
Constituent	Concentration (milligrams per kilogram)							
	Sweeps #1	Sweeps #2	May #1	CL-1	LA Classic #1	TTLC	20X TCLP	10X STLC
	1/13/16	1/13/16	10/11/02	10/11/02	10/11/02			
Antimony	ND<50	ND<110	ND<3	ND<3	ND<3	500	--	150
Arsenic	34	ND<34	ND<0.5	ND<0.5	ND<0.5	500	100	50
Barium	700	790	**11,100**	**10,400**	49.2	10,000	2,000	1,000
Beryllium	5.1	ND<5.6	ND<0.5	ND<0.5	ND<0.5	75	--	7.5
Cadmium	**100**	ND<5.6	**46.3**	**22.9**	**149**	100	20	10
Chromium	**580**	**400**	45.6	8.75	**145**	500/ 2,500*	100	50/ 5,600*
Cobalt	28	73	2.29	ND<0.5	7.02	8,000	--	800
Copper	**8,200**	**35,000**	**14,500**	**16,800**	**18,000**	2,500	--	250
Lead	**480**	**77**	6.64	8.44	10.7	1,000	100	50
Mercury	0.15	0.097	NA	NA	NA	20	4	2
Molybdenum	65	100	ND<1	1.57	23.3	3,500	--	3,500
Nickel	**710**	**4,200**	**2,510**	**1,640**	**207**	2,000	--	200
Selenium	ND<15	ND<34	ND<1	ND<1	ND<1	100	20	10
Silver	**500**	**570**	**357**	**375**	**279**	500	100	50
Thallium	ND<50	ND<110	ND<1	ND<1	ND<1	700	--	70
Vanadium	33	39	2.73	0.565	13.5	2,400	--	240
Zinc	**4,900**	**8,600**	**4,650**	**5,100**	**5,840**	5,000	--	2,500

Notes:

ND = Not detected

NA = Not analyzed

*First value is for chromium VI compounds and second value is for chromium and chromium III compounds. The laboratory analyses did not distinguish between chromium VI and chromium III, so the most conservative thresholds are used for comparison.

Results in **bold red** exceed a regulatory threshold.

Results in **bold blue** exceed 20 times the TCLP and/or 10 times the STLC, indicating total concentrations are theoretically high enough (when maximum theoretical leaching potential is assumed) to fail the TCLP and/or STLC, if tested.

REDLINE/STRIKE

Table 4: TCLP Metals Concentrations in Sweeps		
Constituent	Concentration (milligrams per liter)	
	Sweeps #1 1/13/16	TCLP Threshold
Arsenic	ND<0.2	5
Barium	1.0	100
Cadmium	ND<0.1	1
Chromium	**13**	5
Lead	ND<0.1	5
Mercury	ND<0.002	0.2
Selenium	0.33	1
Silver	ND<0.2	5
NOTES: ND = Not Detected		

3.3 PRE-ACCEPTANCE CRITERIA

ATLAS only accepts waste consisting of sweeps generated by manufacturers of precious metals jewelry. ATLAS' pre-acceptance criteria requires generators that deliver sweeps to the facility to provide a certification stating each delivery consists only of sweeps generated during jewelry manufacturing and does not contain any materials other than metal dust/grindings and polishing compound. An example of this document is presented in Exhibit 1.

ATLAS does not require generators to provide chemical analyses of waste shipments as pre-acceptance criteria because it does not place limits on the metals concentrations within the sweeps (other than requiring that the sweeps are generated during jewelry manufacturing and thus contain precious metals) and because there are no other chemical analyses that would provide useful information regarding the sweeps' treatment or storage by ATLAS. The hazardous properties and constituents of the sweeps are well known based on their source (jewelry manufacturing). Other than metals, no other hazardous materials are used in the jewelry manufacturing process to produce the sweeps, and hence -- in ATLAS' and the industry's experience -- no other contaminants would be potentially present in the sweeps.

3.4 INSPECTION AND FINGERPRINTING

Upon receipt of the waste and after verifying the information on the manifest or other shipping document, ATLAS inspects and analyzes the contents of each individual container to confirm that the delivered material is consistent with jewelry sweeps.

Specifically, ATLAS conducts the following inspection and analysis of each individual container of waste upon receipt:

REDLINE/STRIKE

Parameter	Test Method	Criteria
Acceptable Color	Visual inspection	Gray, tan, or metallic
Acceptable Particle size	Visual inspection	No larger than ⅛ inch

ATLAS will contact the generator before processing shipments of waste that are determined to be nonconforming with the acceptance criteria for the color and/or particle size parameters.

3.5 OUTGOING WASTE SHIPMENT ANALYSIS

ATLAS collects a sample of each individual batch of sweeps following treatment and sends the sample to a laboratory for an assay of gold, platinum, hand silver. The results of the assay provide the information needed to assign a monetary value to the sweeps. In addition, the assay provides confirmation that the sweeps contain precious metals and can be accepted at a precious metals recovery facility. An example of an assay is presented in Exhibit 5.

3.6 PERIODIC GENERATOR PROFILE VERIFICATION

ATLAS requires generators to update their pre-acceptance certifications on an annual basis. In the event that ATLAS receives a waste shipment that is determined to be inconsistent with the sweeps in terms of color and particle size, ATLAS will contact the generator and require the generator to provide additional information regarding the process that generated the waste. If the generator is unable to resolve the waste discrepancy satisfactorily, ATLAS will take steps consistent with California's regulations (e.g., 22 CCR 66264.72, where applicable) to reject the waste shipment. In addition, ATLAS may reject further waste shipments from that generator. A similar procedure will be followed if a post-processing assay indicates that the material assayed does not contain precious metals.

REDLINE/STRIKEOUT

4. FACILITY DESIGN - STORAGE

4.1 STORAGE AREAS FOR DRUMS / CONTAINERS / TANKS / OTHER DEVICES

There are two storage areas for containers of sweeps, the In-Process Storage Area, which is used to store the processed jewelry sweeps prior to the generator's acceptance of the assay result, and the Shipping Area, which is used to store the processed jewelry sweeps after the generator accepts the assay results and prior to shipment by a licensed hazardous waste transporter to a recycling facility.

Each batch of sweeps received from a generator maintains the same lot number from the time of acceptance until it is shipped offsite after processing and assaying, so the facility has a record tracking management and movement of each batch of the materials at all times.

The locations of the two storage areas are indicated on Figure 4, and a summary of the physical and other properties of the two storage areas are summarized on Table 5. The In-Process Storage Area and Shipping Area are shown on Photographs 1 and 2, respectively.

Table 5: Storage Areas

Property	In-Process Storage Area	Shipping Area
Dimensions	6 feet x 9 feet	5 feet x 9 feet
Location	East end of facility	West end of facility
Maximum capicity	1,500 pounds	1,500 pounds
Container types	5-, 10- 15-, and 35-gallon DOT containers	35- and 55-gallon DOT containers
Maximum container stacking height	2	1
Incompatibility separation	Not applicable – only sweeps stored here	Not applicable – only sweeps stored here
Secondary containment/berm height	Not required – only solids stored (processed sweeps)	Not required – only solids stored (processed sweeps)
Storage times	Average less than one week, maximum one year	Average two weeks, maximum one year
Inspection frequency	Weekly	Weekly
Aisle space	Minimum 30”	Minimum 30”
Distance of ignitable and reactive waste from property line	Not applicable – sweeps are not ignitable or reactive	Not applicable – sweeps are not ignitable or reactive

REDLINE/STRIKEOUT

Photograph 1: In-Process Storage Area

Photograph 2: Shipping Area

4.2 HAZARDOUS WASTES STORED

The only wastes stored in the In-Process Storage Area and the Shipping Area consist of processed sweeps. Information regarding the processed sweeps is presented below:

- Common waste chemical name(s): Jewelry polishing and sweeps, also known as sweeps
- EPA hazardous waste number: D007 (chromium)
- California hazardous waste number: 172 (Metal dust and machining waste)
- Specific gravity: Varies based on metals and particle size. May range from approximately 1 to 10.
- Vapor pressure: Not applicable
- Flame point/auto-ignition temperature: Not applicable
- pH: Not applicable
- Color: grey

REDLINE/STR

4.3 STORAGE DEVICE / EQUIPMENT DESCRIPTION

Storage equipment in the In-Process Storage Area consists of DOT containers with capacities of 5, 10, 15, and 35 gallons. Storage equipment in the Shipping Area consists of DOT containers with capacities of 35 gallons and 55 gallons.

4.4 SECONDARY CONTAINMENT SYSTEM FOR STORAGE AREAS

The facility does not store liquid wastes and the storage areas have an impermeable floor inside the building, so secondary containment requirements are not applicable.

4.5 STORAGE OF IGNITABLE, CORROSIVE, OR REACTIVE HAZARDOUS WASTE

The facility does not transfer or store ignitable, corrosive or reactive wastes

4.6 SPECIFIED AIR EMISSIONS CONTROLS

Air emissions standards are not applicable to the containers in the two storage areas.

REDLINE/STRIKEOUT

5. FACILITY DESIGN - TREATMENT

5.1 TREATMENT PROCESS DESCRIPTION AND FLOW DIAGRAM

Treatment process: Treatment equipment consists of two kilns, two ball mills, two vibratory screens, and a cone blender.

Equipment operation: Information pertaining the operation equipment is presented below.

- Chemicals: No chemicals are added to the process.
- Process type: The process is a batch process.
- Feed rate: The batch size for each piece of equipment is 50 pounds or less and is added all at once.
- Chemical reactions: Not applicable.
- Products and by-products: The product of the treatment process consists of jewelry polishing / sweeps (sweeps) from which polishing compound has been removed. There are no byproducts.
- Flow Process Diagram: A diagram showing existing treatment process units is presented as Figure 5. Materials are transferred between different process units manually.
- Enterable equipment: None of the equipment is large enough to be enterable.
- Aisle space: At least 30 inches of aisle space is maintained between equipment.
- Waste cutoff systems: The process is fed by batch, under the operator's control, and there is no need for an automatic or manual feed waste safety cutoff system.
- Overfill prevention: There are no bypass systems, standby tanks or a backup plan to prevent overfills, as the equipment is sized to contain the largest batch in its entirety.
- Pressure control or pressure release controls: Not applicable.
- Temperature controls and temperature safety cutoffs: The afterburners on the roasting kiln are equipped with temperature monitors and temperature recording devices, as per the requirements of the facility's air permit. There is also a high temperature safety switch in each kiln that shuts off the flow of natural gas if the temperature inside the kiln exceeds 1,335 degrees Fahrenheit. There is also a manual shutoff valve.
- Liquid level indicators**:** No liquids are processed in the equipment, and hence there are not liquid level indicators.

REDLINE/STRIKEOUT

- Vapor control: Any organic chemicals in the polishing compound are volatilized in the roasting kilns in combusted in the afterburners, which operate at 1800 degrees Fahrenheit.

- Effectiveness of treatment: The process is not used for removal of hazardous waste constituents, but rather to remove nonhazardous polishing compound to allow assay of the sweeps for valuation based on precious metals content.

- Prevention of releases to surface soils, surface water, or wetlands: The facility is located on the seventh floor of the building and all operations are conducted inside the building. Therefore, there is no potential for releases of hazardous waste to reach surface soils, surface water, or wetlands.

- Prevention of releases to air: The roasting kilns are equipped with afterburners to combust organic compounds. The South Coast Air Quality Management District does not require any additional air pollution control equipment.

5.2 HAZARDOUS WASTES TREATED

The waste and physical properties of hazardous waste that is treated in the process is as follows:

- Common waste chemical name: Jewelry polishing and sweeps, also known as sweeps
- EPA hazardous waste number: D007 (chromium)
- California hazardous waste number: 172 (Metal dust and machining waste)
- Specific gravity: Ranges from approximately 1 to 10
- Vapor pressure: Not applicable
- Flame point/auto-ignition temperature: Not applicable
- pH: Not applicable
- Color: Gray

5.3 TREATMENT DEVICE/EQUIPMENT DESCRIPTION

Treatment equipment consists of two kilns, two ball mills, two vibratory screens, and a cone blender.

Kilns: The kilns are constructed of steel with a refractory liner. Each kiln measures 32 inches by 40 inches by 32 inches and is used to dry jewelry sweeps. Each unit employs an afterburner measuring 17 inches by 17 inches by 37 inches. The kilns are shown on Photograph 3.

Each kiln is a Baker Supply Model GK-1 with a 250,000-BTU/hour natural gas-fired low NOx burner and an integral 250,000-BTU/hour natural gas-fired afterburner. ATLAS does not currently have engineering drawings of the kilns because they were purchased by the former owner/operator of the facility. The jewelry sweeps are placed into the kilns and the temperature in the kilns is increased to up to 1,335 degrees Fahrenheit. The polishing compound residue in the sweeps is combusted and the

REDLINE/STRIKEOUT

combustion exhaust gases exit through an afterburner that operates at 1,800 degrees Fahrenheit. The kilns are operated on a batch basis with a typical batch size of 40 to 50 pounds per batch. The typical drying cycle is two hours. Facility personnel monitor the temperature of the kilns and the afterburners and the cycle time during operations.

The kilns are operated under air permits issued by the South Coast Air Quality Management District (SCAQMD) that specifies maintenance and operating conditions for the kilns and afterburners. All kiln emissions are vented to the afterburners, effectively eliminating the potential for uncontrolled kiln emissions. The SCAQMD's permits (one for each kiln) minimize kiln emissions by requiring that the units only fire natural gas, are not used to process specified carcinogenic air contaminants, and only operate when the afterburners are in full operation. In addition, the performance of the afterburners is monitored continuously by reference to continuous temperature measuring devices. The SCAQMD's issuance of the permits demonstrates that emissions of combustion gases (consisting primarily of carbon dioxide and water vapor resulting from combustion of stearic acid, glycerides, and petroleum wax/oils in the polishing compounds) and any associated health and environmental exposures are within acceptable limits. The operation of the kilns pursuant to the SCAQMD permits ensures that releases to the air that may have adverse effects on human health or the environment are prevented.

Photograph 3: Kilns

REDACTED

Ball Mills: Each ball mill measures 12 inches in diameter by 12 inches in length and is used to reduce the size of the jewelry sweeps to less than 60 mesh size. The typical cycle processes a charge of 30 pounds in 15 minutes.

Each unit is a standard, off-the-shelf ball mill constructed of steel and manufactured by Bico-Braun. The ball mills are partially filled with sweeps and cast iron balls and rotate around a horizontal axis. An internal cascading effect causes the iron balls to grind the sweeps into smaller, more uniform particles. When the milling process is complete, the sweeps are removed into a pan placed beneath the unit. A manufacturer's schematic is shown below and the ball mills at the facility are shown on Photograph 4.

The ball mills operate at room temperature and do not generate emissions subject to air emissions control requirements. All waste and hazardous constituents are contained within the units and inside the room during operation, so there are no pathways for exposures to humans or the environment. Direct exposure to facility personnel from sweeps processed in the ball mills is controlled through use of personal protective equipment (e.g., gloves, aprons, safety glasses).

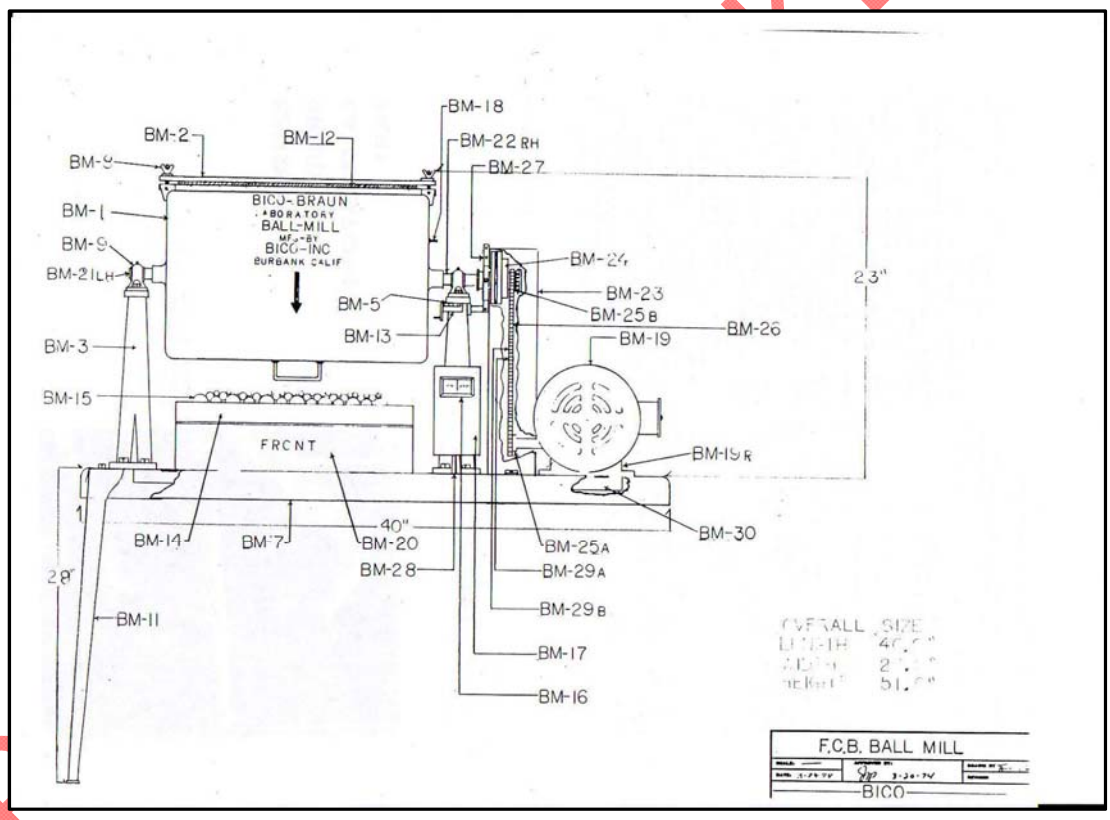

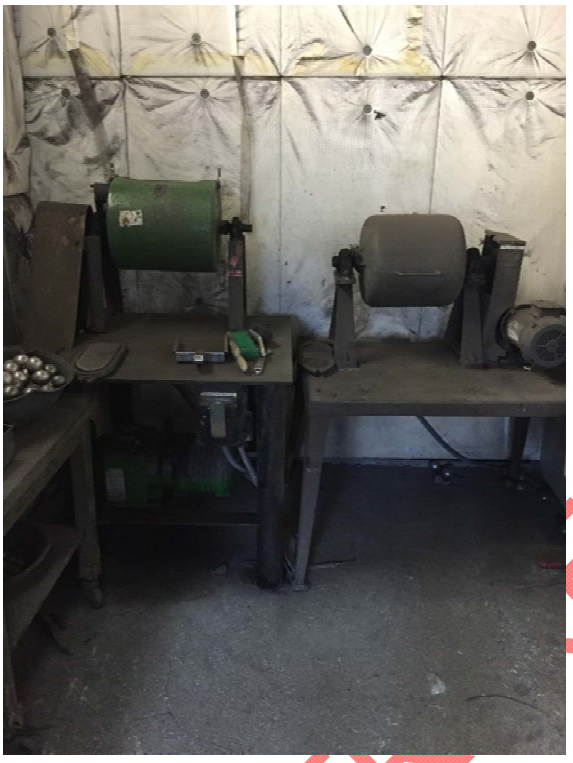

Photograph 4: Ball Mills

Screen Separators: The 18-inch diameter and 24-inch diameter vibratory screen separators are used to separate jewelry sweep particles into less than 60 mesh size. The oversize particles that are greater than 60 mesh size and cannot be further reduced are removed from further processing and transferred to the In-Process Storage Area. The typical cycle is less than 30 minutes. This is a batch process with the typical batch being 50 pounds.

Each screen is a standard off-the-shelf separator constructed of steel and manufactured by SWECO that consists of a vibratory screening device that vibrates about its center of mass. Vibration is accomplished by eccentric weights on the upper and lower ends of the motion-generator shaft. Rotation of the top weight creates vibration in the horizontal plane, which causes material to move across the screen cloth to the periphery. The lower weight acts to tilt the machine, causing vibration in the vertical and tangential planes. The angle of lead given the lower weight with relation to the upper weight provides variable control of the spiral screening pattern. ATLAS does not currently have engineering drawings of the screens because they were purchased by the former owner/operator of the facility. However, a general schematic showing the typical configuration of SWECO screen separators is presented below. The large and small screens at the ATLAS facility are shown on Photographs 5 and 6, respectively.

The vibratory screens operate at room temperature and do not generate emissions subject to air emissions control requirements. All waste and hazardous constituents are contained within the unit and inside the room during operation, so there are no pathways for exposures to humans or the environment. Direct exposure to facility personnel from sweeps processed in the screens is controlled through use of personal protective equipment (e.g., gloves, aprons, safety glasses).

REDLINE/STRIKEOUT

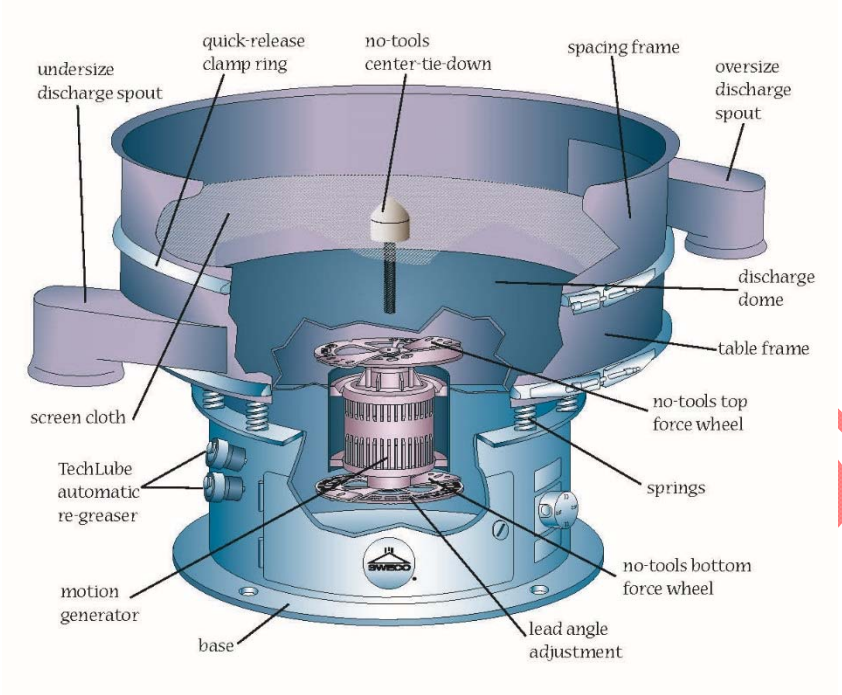

Photograph 5: Large Screen Separator

Photograph 6: Small Screen Separator

Cone Blender: The 30-inch diameter cone blender is used to blend the less than 60 mesh jewelry sweeps to ensure that a representative sample can be taken for determining the precious metal content. The typical blending cycle is one hour. This is a batch process with the typical batch being 50 pounds and a maximum batch size of 400 pounds.

The cone blender is a standard off-the shelf cone blender constructed of steel and manufactured by Sepor. Blending occurs by slowly rotating the blender, where the angle of the bottom cone becomes tilted beyond the angle of repose of the material in the blender. Multiple surface layers then flow towards the empty cone, followed by the remainder of the material, in mass, to the empty cone end. The cone shape pushes a portion of the material towards the center, and upwards, where blending takes place. Rapid blending occurs because of shape of the dual cone, the random travel direction of particles within the blender, and the differing particle velocities as they travel from end to end. ATLAS does not currently have engineering drawings of the cone blender because it was purchased by the former owner/operator of the facility. However, a general schematic showing a typical Sepor cone blender configuration, which is representative of the cone blender at the facility, is shown below. The cone blender at the facility is shown on Photograph 7.

The cone blender operates at room temperature and does not generate emissions subject to air emissions control requirements. All waste and hazardous constituents are contained within the unit and inside the room during operation, so there are no pathways for exposures to humans or the environment. Direct exposure to facility personnel from sweeps processed in the cone blender is controlled through use of personal protective equipment (e.g., gloves, aprons, safety glasses).

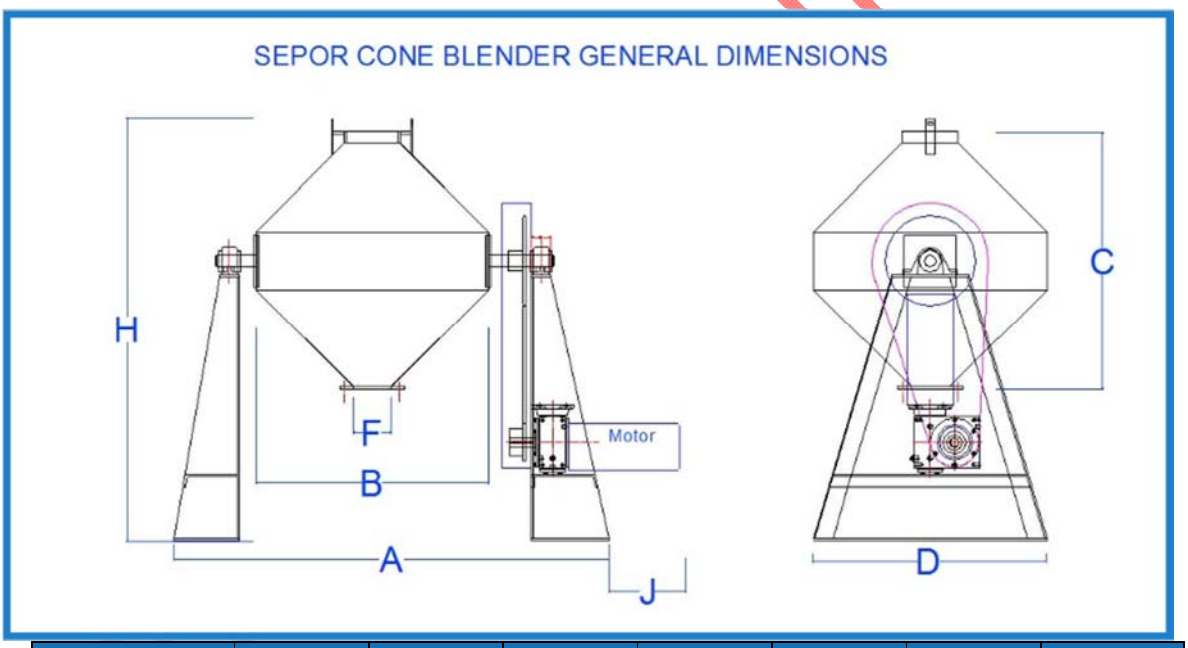

Cone Blender Size	A	B	C	D	F	H	J
30	59	30	1.5	28	6	48	20

Photograph 7: Cone Blender

5.4 SECONDARY CONTAINMENT DESIGN

The treatment equipment contains no free liquids and is situated inside a building with an impermeable floor and hence the equipment is exempt from secondary containment requirements.

5.5 SPECIFIED AIR EMISSIONS CONTROLS

The roasting kilns are equipped with afterburners to combust all organic compounds, as specified in the facility's air permits. The South Coast Air Quality Management District does not require any additional air pollution control equipment.

REDLINE/STRIKEOUT

6. TRAINING PLAN

6.1 TRAINING

All personnel who manage sweeps and associated processing equipment are provided with adequate training to perform their duties safely and in compliance with hazardous waste regulations. All personnel associated with the management of hazardous wastes are required to successfully complete a program of instruction that trains them to perform their duties safely and in compliance with regulatory requirements.

6.2 TRAINING PROGRAM

The training program consists of an introductory training program and an annual refresher training program. The introductory training program is completed by each subject facility employee within the first six months of employment or six months after a change of position. A subject employee is not allowed to work in an unsupervised position until he/she has completed this training. Employees who have not been trained in all courses below are not allowed to enter the Sweeps Storage and Processing Room without supervision and are not allowed to manage hazardous waste.

Introductory and annual training courses include the following:

- In-house training on hazardous waste management procedures in the Sweeps Storage and Processing Room, including:
  - Hazardous waste identification;
  - Storage and inspection of hazardous waste;
  - Operation of processing equipment;
  - Sampling and analysis;
  - Shipment of hazardous wastes;
  - Manifesting; and
  - Record-keeping.
- In-house training on Contingency Plan implementation designed to ensure that facility personnel are able to respond effectively to emergencies and become familiar with emergency equipment and emergency systems, including:
  - Use, inspection, repair, and replacement of facility emergency and monitoring equipment
  - Communications or alarm systems
  - Response to releases, fires, or explosions
  - Shutdown of operations.
- In-house health and safety training that includes discussion of safety and health hazards at the facility, personal protective equipment, other safety practices, and names of on-site safety coordinators and alternates.

REDLINE/STRIKEOUT

- Contractor-provided Hazardous Waste Operations and Emergency Response (HAZWOPER) training (initial 24-hour training and annual 8-hour refresher).

Employees who work in the Sweeps Storage and processing Room receive all training courses, and other employees at the facility who are not directly involved in management of hazardous waste receive only the Contingency Plan training.

With the exception of the HAZWOPER training, which is provided by an outside contractor, all training is provided in-house by the Production Foreman. The Production Foreman will receive training in hazardous waste regulations (one-time course), Department of Transportation (DOT) hazardous materials classification (one-time course), and HAZWOPER (introductory and annual).

6.3 TRAINING RECORDS

Training records consist of attendance records and copies of training materials indicating topics covered for in-house training courses and certificates of completion for training provided for outside contractors.

Personnel training records are kept at the facility and are available for examination by a Department of Toxic Substances (DTSC) representative upon request. The training records for current personnel are kept on file at the facility until the facility closes. The training records of former employees are kept for at least 3 years from their last date of employment at the facility.

Training records include:

- A job title for each position at the facility that is related to hazardous waste management;
- A job description for each of those positions;
- The dates on which employees received their initial training and annual refresher training.

6.4 JOB DESCRIPTIONS

Job descriptions for the employees who work in the Sweeps Storage and Processing Room are presented below.

REDLINE/STRIKEOUT

Job Description

Position / Title: Production Foreman

General Description: Responsible for all operational aspects of the Hazardous Waste Facility (Sweeps Storage and Processing Room)

Requirements: Must be high school graduate or equivalent and have a minimum experience of four (4) years in precious metal operations.

Duties / Responsibilities: Responsible for the operation of the Hazardous Waste Facility, including the following:

- Conducting customer waste acceptance evaluations
- Receiving and inspecting incoming hazardous waste shipments and customer certifications
- Processing hazardous waste in onsite equipment
- Conducting sampling of processed materials for assay
- Conducting inspections of hazardous waste storage areas
- Preparing and signing hazardous waste manifests
- Providing training to site personnel
- Maintaining all records required by the Standardized Hazardous Waste Permit and by Cal/OSHA

Training Requirements	Frequency
HAZWOPER	24 hours initially, 8 hour refresher annually
Hazardous Waste Management Procedures*	Annually
Contingency Plan*	Annually
Health & Safety Procedures*	Annually
Hazardous waste regulations	One time
DOT hazardous materials classification	One time

*Training course is led by Production Foreman

REDLINE/STRIKEOUT

Job Description

Position / Title: Furnace Operator

General Description: Responsible for operation of furnace kilns, ball mills, separators, and blender

Requirements: Must be high school graduate or equivalent and have a minimum experience of two (2) years in precious metal operations.

Duties / Responsibilities: Responsible for the following operations in the Hazardous Waste Facility:

- Conducting customer waste acceptance evaluations
- Receiving and inspecting incoming hazardous waste shipments and customer certifications
- Processing hazardous waste in onsite equipment
- Conducting sampling of processed materials for assay
- Conducting inspections of hazardous waste storage areas
- Preparing hazardous waste manifests for signature by the Production Foreman

Training Requirements	**Frequency**
HAZWOPER	24 hours initially, 8 hour refresher annually
Hazardous Waste Management Procedures	Annually
Contingency Plan	Annually
Health & Safety Procedures	Annually

REDLINE/STRIKEOUT

7. SECURITY

Security features at the facility include the following:

- A locked entry into the facility
- An alarm system
- Bulletproof windows at the office areas that face the Sweeps Storage and Processing Room
- Security cameras within the office and Sweeps Storage and Processing Room
- A locked entry with keypad entry into the Sweeps Storage and Processing Room

The door to the entrance of the Sweeps Storage and Processing Room is posted with a sign stating "Danger - Hazardous Waste Area - Unauthorized Personnel Keep Out".

REDLINE/STRIKEOUT

8. INSPECTION PLAN

8.1 INSPECTION PLAN

This Inspection Plan specifies a schedule and method of inspection of various equipment, structural, and operational features of the facility. Regularly scheduled inspections can help to identify and correct situations that could lead to sudden or non-sudden occurrences that may threaten human health or the environment.

The facility is inspected for malfunctions and deteriorations, operator errors, and releases which may cause or lead to the release of hazardous waste constituents to the environment or threaten human health. When deficiencies are identified, steps are taken immediately to correct the situation, and equipment determined during an inspection to be in a state of malfunction, deterioration, or disrepair will be removed from service until it is in good repair to ensure that the problem does not lead to an environmental or human health hazard.

The facility conducts inspections in accordance with the inspections schedule below.

Table 6: Inspection Schedule

Description	Items Inspected	Frequency	Actions/Records
General facility	Signs, security	Daily	Deficiencies corrected immediatedly and noted in Maintenance Log
Container Storage Areas	Container condition, spills, labels, quantity/capacity, aisle space	Weekly	Weekly Inspection Form
Process Equipment	Equipment function, leaks, monitoring data (temperature)	At least once per 8-hour shift	Personnel observation during operations; routine observations not recorded but deviations noted in Maintenance Log
Health and Safety Equipment	Personal protective equipment and clothing	Weekly	Weekly Inspection Form
Emergency Equipment			
Eye Washes	Function	Weekly	Weekly Inspection Form
Fire Extinguishers	Function	Monthly	Inspection date recorded on tags affixed to fire extinguishers
Fire alarms	Function	Monthly	Monthly Inspection Form
Spill Kits	Contents	Monthly	Monthly Inspection Form
First Aid Kits	Contents	Monthly	Monthly Inspection Form

All findings requiring corrective action are recorded in an inspection log. Inspection logs are maintained in the operating records for at least three years from the date of inspection. Records

REDLINE/STRIKEOUT

include date, time, inspector's name, observations, repairs required, and repairs performed. A facility inspection form used for weekly inspection of container storage areas is presented below.

REDLINE/STRIKEOUT

Weekly Inspection Form

Inspector: _____

Container Inspections					
Item	Description	In-Process Area		Shipping Area	
		Yes	No	Yes	No
1	All containers free of leaks, corrosion, deterioration, or bulging				
2	Containers stacked no more than two high in stable format.				
3	Minimum 30-inch aisle spaces are maintained. - Containers are positioned within the lines without leaning at an angle from the vertical axis. - Container labels are facing aisles				
4	All containers are closed and labeled				
5	No waste residue on floor				
6	Waste quantity does not exceed the permitted capacity (1,500 pounds)				

Equipment Inspections			
Item	Description	Yes	No
7	Personal protective equipment available		
8	Eye washes dfunctional		

Note: All "No" answers must be accompanied by a description of the issue and corrective action below.

Identified issue(s) and corrective action(s):

Signature:_____Date:_____Time:_____

REDLINE/STRIKEOUT

Monthly Inspection Form

Instructions: For each inspection item, use a check mark (✓) under each inspection item to indicate the following:

- Fire alarms are functional
- Spill kits are stocked
- First aid kits are stocked

Where deficiencies are noted, indicate "No", describe the deficiency and update the form when the deficiency is corrected.

Equipment Inspections							
Date	**Time**	**Inspector**	**Fire Alarms**	**Spill Kits**	**First Aid Kits**	**Deficiencies**	**Corrective Action Date**

REDLINE/STRIKEOUT

Maintenance Log

Instructions: For any processing equipment or security equipment requiring maintenance, describe the type of maintenance required and enter the corrective action date when the maintenance has been completed.

Maintenance Activities				
Date	**Time**	**Employee**	**Description of Maintenance Required**	**Corrective Action Date**

REDLINE/STRIKEOUT

9. CONTINGENCY PLAN

9.1 INTRODUCTION

This hazardous waste contingency plan for Atlas Precious Metals, Inc. (ATLAS) establish procedures to minimize hazards to human health or the environment resulting from fires, explosions, or any unplanned sudden or non-sudden release of hazardous waste to the environment (i.e., outside the facility). The plan is to be implemented immediately whenever there is a fire, explosion, or release of hazardous waste to the environment. This plan has been prepared in accordance with the requirements for a contingency plan described in Section 66264.50 – 66264.56 of Title 22 of the California Code of Regulations (22 CCR 66264.50 - 66264.56)

This plan will be reviewed and immediately amended and an appropriate permit modification request will be submitted to DTSC whenever any of the following occurs:

- The applicable regulations are revised (i.e., 22 CCR 66264.50 - 66264.56), to the extent the revisions affect the plan;
- The plan fails in an emergency;
- The facility changes in its design, construction, operation, maintenance, or other circumstances in a way that materially increases the potential for fires, explosions, or releases of hazardous waste or changes the response necessary in an emergency;
- The list of emergency coordinators changes; or
- The list of emergency equipment changes.

The Production Foreman maintains a copy of this plan, and the plan is available to all employees. In addition, copies of this plan have been submitted to outside agencies who may be called upon to provide emergency services in the event of a hazardous waste release, as described in this plan.

9.2 FACILITY DESCRIPTION

Atlas Precious Metals, Inc.
640 South Hill Street, Suite 743
Los Angeles, California 90014
(213) 622-9995

Hazardous wastes managed at the facility consist of jewelry polishing/sweeps (sweeps). Sweeps consist of dry materials, and any spills of sweeps would be contained on the floor of the facility. There is no effluent associated with processing of material at the facility. The only danger associated with facility operations, other than cleanup associated with spills of dry material, would be the result of a natural gas leak, fire, or explosion.

REDLINE/STRIKEOUT

9.3 EMERGENCY RESPONSE ORGANIZATION

9.3.1 Emergency Coordinators

It is ATLAS' policy that, at all times, there is at least one employee on-site, or on call, available to respond to and coordinate emergency response activities. This person will be designated as the Emergency Coordinator.

The Emergency Coordinator is familiar with this hazardous waste contingency plan; all operations and activities at the facility; the location and characteristics of the wastes generated on-site; the facility layout; and the location of facility records. The Emergency Coordinator will be responsible for characterizing a release, for initiating communications within the facility, for conducting notifications outside of the facility, for coordinating emergency services and medical services, and for overseeing the proper remediation of the release. In addition, this individual will have the authority to commit resources to see that the contingency plan is appropriately carried out.

ATLAS has designated the following as the primary and alternate Emergency Coordinators:

Primary Emergency Coordinator:	John Ozonian Production Foreman (310) 489-3178 (mobile) 8145 Newcastle Drive Whittier, California 90605
Alternate Emergency Coordinator:	Ani Samuelian Vice President (818) 414-5454 10345 Woodbridge St Toluca Lake, California 91602

9.3.2 Emergency Response Personnel

Emergency response personnel at the facility include the Production Foreman and the Furnace Operator, both of whom have received Hazardous Waste Operations and Emergency Response (HAZWOPER) training. Emergency response personnel will respond to releases of hazardous waste at the facility and small fires that can be readily addressed with a portable fire extinguishers. For larger fires, facility personnel will request assistance from the Los Angeles Fire Department.

REDLINE/STRIKEOUT

9.4 EMERGENCY RESPONSE SYSTEMS

9.4.1 Emergency Equipment

Emergency equipment and supplies at the ATLAS facility consist of the following:

- Portable type ABC dry chemical fire extinguishers;
- A manual fire alarm;
- First aid kits
- Eye wash station;
- Spill cleanup kits, which include brooms, dustpans, empty containers, gloves, and safety goggles; and
- Automatic sprinklers located throughout the building, including 12 in the Sweeps Storage and Processing Room.

The locations of the fire extinguishers, first aid kits, eye wash station, and spill cleanup kits are indicated on Figure 6.

9.4.2 Alarm Systems

A manual fire alarm is located in the hallway adjacent to the exit stairway (see Figure 6).

9.4.3 Communication Systems

Communications systems that can be used in the event of an emergency at the ATLAS facility consist of telephones and an intercom system located throughout the facility, including in the Sweeps Storage and Processing Room, and mobile phones carried by all personnel.

9.5 EMERGENCY PROCEDURES

In the event of a fire, explosion, or release of hazardous waste from the facility, the employee who identifies the situation will notify the Emergency Coordinator. To the extent possible, the Emergency Coordinator will assess the source, magnitude, and areal impact of the fire, explosion, or release, using visual observations, facility records, and/or employee knowledge. The Emergency Coordinator will also evaluate the potential for the release to adversely impact human health and the environment. In doing so, the Emergency Coordinator will consider not only direct impacts, such as flames, but also indirect impacts, such as water runoff generated as a result of fire extinguishing equipment or irritating gases generated as a result of fires.

The Emergency Coordinator will assess whether evacuation is necessary for the entire facility, the building, or only for areas within the vicinity of the fire, explosion, or release. The Emergency Coordinator will then use appropriate internal communication systems to notify ATLAS employees of the need to evacuate. The Emergency Coordinator will contact emergency response agencies, as described below, and the building manager.

REDLINE/STRIKEOUT

If the explosion, fire, or release can be addressed safely by trained employees, the Emergency Coordinator will assign one or more employees to extinguish flames using onsite fire extinguisher or clean up the release. Hazardous materials releases will be cleaned up using materials in the spill kits, as needed, and/or other materials used as part of standard operations. Any waste materials generated during cleanup of a spill will be placed in closed containers and appropriately labeled as hazardous waste or, as applicable, returned to the operational cycle.

The Emergency Coordinator will direct actions to prevent fire or additional releases of hazardous waste from occurring or spreading, if such actions can be done safely. These actions might include: use of fire extinguishers, stopping processes and operations, or uprighting fallen containers. If operations cease during the fire or release, the Emergency Coordinator will also monitor for leaks or ruptures in equipment, wherever this is appropriate.

9.6.1 Verbal Notifications

In the event of a release, fire, or other event that is determined by the Emergency Coordinator to adversely affect human health or the environment, the Emergency Coordinator will immediately orally notify the following agencies:

Agency	Phone
Los Angeles Fire Department	911
Los Angeles County Fire Department Health Hazardous Materials Division	(323) 881-2411
State Office of Emergency Services (OES)	(800) 852-7550

The Emergency Coordinator will report the following information:

- Name and telephone number;
- Name and address of the ATLAS facility;
- Time and type of incident (e.g., release, fire);
- Name and quantity of material(s) involved;
- Extent of injuries, if any; and
- Possible hazards to human health, or the environment.
- The Emergency Coordinator will also contact the Building Management office at (213) 629-2124.

The Los Angeles Fire Department will notify nearby businesses and facilities as warranted by the emergency situation.

Any ATLAS personnel injured during the emergency will be taken to the following medical facility for treatment unless the emergency situation dictates that another hospital or medical facility be used:

REDLINE/STRIKEOUT

Good Samaritan Hospital
1225 Wilshire Blvd
Los Angeles, CA 90017

Subsequently, the facility will orally notify the DTSC and the appropriate local and state authorities once the released material and any contaminated debris have been appropriately disposed of and all equipment used in the emergency response is cleaned.

9.6.2 Written Notification

Within 15 days of a release reported orally to the agencies listed above, ATLAS will submit a written report on the incident to DTSC. The report will include the following:

- Name, address, and telephone number of the ATLAS facility;
- Date, time and type of incident (e.g., release, fire);
- Name and quantity of material(s) involved;
- Extent of injuries, if any;
- An assessment of actual or potential hazards to human health or the environment, where this is applicable; and
- Estimated quantity and disposition of recovered material that resulted from the incident.

9.7 DISPOSAL OF RELEASED MATERIAL

After a fire, explosion, or release event, the Emergency Coordinator is responsible for seeing that the released material and any contaminated debris, water, or other material that results from a release or fire is handled appropriately. All waste materials generated during cleanup of the release and any potentially hazardous residues from fire extinguishing will be managed as a hazardous waste. In addition, the Emergency Coordinator will assure that waste materials are segregated based on their compatibility and that no incompatible materials will be stored, treated, or disposed of with the released waste.

9.8 EVACUATION PROCEDURES

In the event that the Emergency Coordinator determines that partial or complete evacuation of the facility is necessary, the Emergency Coordinator will notify ATLAS personnel via the intercom paging system or cell phone. ATLAS employees will evacuate the facility using the evacuation routes indicated on Figure 6 and evacuated personnel will assemble in the waiting room near the facility entrance, as indicated on Figure 6.

Following evacuation, the Emergency Coordinator will confirm that all employees have evacuated the facility by taking roll call using the security list of employees in the facility. The Emergency Coordinator will also check the daily visitor roster from the front lobby to confirm that all visitors have evacuated the facility.

Evacuated employees will not re-enter the facility until the Emergency Coordinator has confirmed that the emergency has been addressed and it is safe to re-enter.

REDLINE/STRIKEOUT

9.9 ARRANGEMENTS WITH LOCAL AUTHORITIES

ATLAS will provide the following organizations with a copy of this contingency plan: the Los Angeles Police Department, the Los Angeles Fire Department, OES, the Los Angeles County Fire Department Health Hazardous Materials Division (which serves as the Certified Unified Program Agency, or CUPA), and Good Samaritan Hospital. In addition, ATLAS will make arrangements to familiarize these organizations with the layout of the facility and places where employees are located, the properties of the hazardous wastes handled at the facility, the types of injuries and illnesses which could result from fires or releases, and the possible evacuation routes.

REDLINE/STRIKEOUT

10. CLOSURE PLAN

10.1 INTRODUCTION

ATLAS processes jewelry polishing/sweeps (sweeps) to determine the precious metal content of the sweeps. The facility occupies a suite on the seventh floor of the St. Vincent Jewelry Center Building. Production equipment includes two kilns, two ball mills, two vibratory screens, and one cone blender. Sweeps are stored in 5, 10, 15, 35, and 55 gallon containers and the maximum quantity in process is 1,500 pounds.

Closure of the facility will be accomplished by cleaning all equipment and surfaces in the hazardous waste processing areas of the facility.

10.2 CLOSURE PERFORMANCE STANDARD

The facility will be "clean closed." The hazardous constituents present in the materials processed at the facility consist of metals. Because metals are naturally-occurring materials that are present in dirt, dust, tap water, or other materials in the facility, the closure performance standard will be background concentrations of metals, as represented by concentrations of metals in rinsewaters collected following cleaning~~non-process areas of the facility, such as office spaces~~. In the event that it is not feasible to achieve background concentrations, ATLAS will submit a human health risk assessment to DTSC with a proposed approach to demonstrate that metals on facility surfaces ~~concentration levels that~~ do not pose a substantial present or potential threat to human health or the environment.

Because all activities described in this application are integral to the sweeps processing operation, there are no scenarios for which the facility would perform partial closure. This closure plan thus addresses final closure only.

10.3 MAXIMUM INVENTORY ESTIMATES

This maximum hazardous waste inventory that will be at the facility at any one time over the active life of the facility is presented on Table 7. This represents the maximum quantity that may be present in storage areas and in treatment equipment.

In addition to hazardous wastes that are stored and processed at the facility, waste will be generated during closure activities. Specifically, closure-generated wastes will consist of bags of dust generated during vacuuming of equipment and storage areas, which will be managed by recycling because of the precious metals content, washwater from cleaning equipment and room surfaces, and disposable closure equipment and supplies (i.e., rags, personal protective equipment [PPE], sampling equipment). Quantities of these residuals are estimated on Table 7.

REDLINE/STRIKEOUT

Table 7: Maximum Inventory Estimates		
Unit	**Maximum Active Life Inventory (pounds)**	**Maximum Inventory at Closure (pounds)**
In-Process Storage Area	1,500	1,500
Shipping Area	1,500	1,500
Kiln #1	50	50
Kiln #2	50	50
Ball Mill #1	30	30
Ball Mill #2	30	30
Large Screen Separator	50	50
Small Screen Separator	30	30
Cone Blender	400	400
Wastes generated during closure:		
Wastewater from equipment decontamination[1]	--	984
Wastewater from flooring decontamination	--	1,066
Dust from vacuuming equipment and flooring	--	100
Disposal equipment and supplies[2]		500
TOTAL	**3,640**	**6,290**

Notes:
[1] Based on 120 gallons of washwater from equipment decontamination and 130 gallons from flooring decontamination (see Table 9 for details) and assumes 8.2 pounds/gallon.
[2] Based on 100 pounds from vacuuming storage and processing areas and 1 drum (500 pounds) of cleaning debris.

REDLINE/STRIKEOUT

10.4 WASTE REMOVAL / TREATMENT

The hazardous wastes processed at the facility have high value because of the precious metals content. During normal operations, wastes are typically processed within one week and are removed from the facility for shipment to a precious metal recovery facility within approximately one week of processing. At closure, all wastes in inventory (if any) will be processed through normal operations and subsequently shipped to a precious metals recovery facility. Similarly, the dust collected during vacuuming of processing equipment and storage areas will be shipped to a precious metals recovery facility. Therefore, the only closure waste that will require management by disposal will consist of miscellaneous decontamination debris and residuals (i.e., rags, PPE, disposal sampling equipment, pressure washwater). These wastes will be containerized in 55-gallon drums. The washwater (five drums) will be shipped to a hazardous waste treatment facility approximately 25 miles away from the ATLAS facility and the solid debris waste (one drum) will be shipped to an off-site hazardous waste disposal facility located approximately 180 miles away from the ATLAS facility.

10.5 DECONTAMINATION PROCEDURE

Equipment that will require closure includes two kilns, two ball mills, two vibratory screens, one cone blender, and associated hoods, ducting, and kiln trays. This equipment will be cleaned by vacuuming residual metals dust, followed by high pressure washing. The equipment will be left in place after closure as a hazardous waste storage and treatment facility and will be retained for potential use in other aspects of ATLAS' jewelry operations. Although the equipment may eventually be sold by the facility for reuse by another facility or for scrap metal value, such sale would occur following completion of closure activities and DTSC's approval of the closure report, and hence is outside the

scope of this Closure Plan. Nonetheless, the closure cost estimate is based on offsite disposal of the equipment following cleaning in order to provide the most conservative estimate.

The walls and floors of the processing and storage areas will be decontaminated by vacuuming and multiple rounds of high pressure washing. Washwater will be contained during washing by closing doors of areas being washed and using absorbent pads, as needed, and the washwater will subsequently be collected with a portable wet vacuum and discharged into drums. There are no floor drains in the waste storage and processing areas.

10.6 CONFIRMATION SAMPLING PLAN FOR STRUCTURES, EQUIPMENT, AND BUILDINGS

Processing and storage areas will be inspected following cleaning to qualitatively assess the effectiveness of decontamination procedures. ~~Following inspection, confirmation sampling will consist of~~ Rinse water from the second and third rounds of pressure washing will be sampled to ~~wipe samples to~~ assess residual metals concentrations. A sample of the facility's tap water will also be collected and analyzed for metals and the resulting concentrations will represent background concentrations. The rinse water sample will be compared to background concentrations and an additional round of pressure washing will be conducted if rinse water concentrations exceed background concentrations. In the event that it is not feasible to achieve background concentrations, ATLAS will submit a human health risk assessment to DTSC with a proposed approach to demonstrate that metals on facility surfaces do not pose a substantial present or potential threat to human health or the environment.

The rinse water samples will be analyzed for all metals that have been confirmed to be present in the sweeps (see Section 3.2.5) using the detection limits summarized on Table 8.~~, as summarized on Table 8 below and indicated on Figure 7. Wipe sampling will be conducted in accordance with the Occupational Safety and Health Administration (OSHA) Technical Manual, Section II, Chapter 2, Appendix C, "Procedures for Collecting Wipe Samples."~~

REDLINE/STRIKEOUT

~~Table 8: Confirmation Wipe Samples~~		
~~Area~~	~~Number of Samples~~	~~Analytes~~
~~In-Process Storage Area~~	~~1~~	~~CAM 17 metals~~
~~Shipping Area~~	~~1~~	~~CAM 17 metals~~
~~Kilns (interior of each unit)~~	~~2~~	~~CAM 17 metals~~
~~Ball Mills (interior of each unit)~~	~~2~~	~~CAM 17 metals~~
~~Screen separators (interior of each unit)~~	~~2~~	~~CAM 17 metals~~
~~Cone blender (interior of unit)~~	~~1~~	~~CAM 17 metals~~
~~Kiln hoods (interior of each unit)~~	~~2~~	~~CAM 17 metals~~
~~Floor beneath each type of processing unit~~	~~4~~	~~CAM 17 metals~~
~~Background samples [1]~~	~~2~~	~~CAM 17 metals~~
~~Quality control/quality assurance[2]~~	~~2~~	~~CAM 17 metals~~
~~**TOTAL**~~	~~**19**~~	

~~**Notes:**~~

~~[1] Background samples will be collected from the floors in the production area outside the hazardous waste processing areas and will be collected from the same types of surface materials as the flooring wipe samples in the hazardous waste processing areas.~~

~~[2] Quality control/quality assurance samples will include one duplicate and one equipment blank (unused wipe).~~

Table 8: Detection Limits for Confirmation Samples					
Method	Matrix	Analyte	MDL	PQL	Units
EPA-6020	Water	Arsenic	0.38	2	ug/L
EPA-6020	Water	Barium	0.066	1	ug/L
EPA-6020	Water	Beryllium	0.05	1	ug/L
EPA-6020	Water	Cadmium	0.034	1	ug/L
EPA-6020	Water	Chromium	0.15	3	ug/L
EPA-6020	Water	Cobalt	0.011	1	ug/L
EPA-6020	Water	Copper	0.32	2	ug/L
EPA-6020	Water	Lead	0.021	1	ug/L
EPA-6020	Water	Molybdenum	0.033	1	ug/L
EPA-6020	Water	Nickel	0.15	2	ug/L
EPA-6020	Water	Silver	0.015	1	ug/L
EPA-6020	Water	Vanadium	0.39	3	ug/L
EPA-6020	Water	Zinc	2.2	5	ug/L
EPA-7471	Water	Mercury	0.03	0.2	ug/L

MDL = Method Detection Limit
PQL = Practical Quantitition Limit
ug/L = micrograms per liter

REDLINE/STRIKEOUT

10.7 CONFIRMATION SOIL SAMPLING PLAN

The facility is located on the seventh floor of a building and operations do not involve any liquid materials. Consequently, there is no potential for soil contamination and no soil sampling is warranted.

10.8 ANALYTICAL TEST METHODS

Rinse water ~~Wipe~~ samples will be submitted to a California certified analytical laboratory for analysis of metals concentrations using EPA Method 6020 or 7471, as indicated on Table 8~~ethod 6010B~~. The concentrations of metals in the rinse water ~~wipe~~ samples ~~collected from processing and storage areas~~ will be compared to the background concentrations of metals in the facility's tap water ~~wipe samples collected from office areas~~ to verify effectiveness of cleaning procedures. If concentrations in rinse water are ~~processing and storage areas are significantly~~ higher than background concentrations ~~in background areas~~, decontamination procedures will be repeated.

~~One washwater sample will be collected for waste characterization purposes and will be analyzed for CAM 17 metals using EPA Method 6001B.~~

10.9 CLOSURE COST ESTIMATE

The estimated cost to close the facility is presented on Table 9. The closure cost estimate is based on the cost of hiring an independent third party to close the facility.

As specified in DTSC's guidance for estimating closure costs, the closure cost estimate does not incorporate any salvage value that may be recouped with sale of wastes, structures, equipment, and other assets. In reality, ~~Because~~ the waste processed at the facility is comprised of valuable precious metals (i.e., gold, platinum, and silver) which would not be managed by disposal under any reasonably foreseeable scenario~~, the cost estimate for management of waste inventory is unrealistically high~~.

The closure cost estimate will be updated annually for inflation and when any of the following occur:

- Changes in the facility's operation;
- An increase in the amount of hazardous waste managed; or
- Any remediation that may be required at the time of closure.

REDLINE/STRIKEOUT

Table 9: Estimated Closure Cost					
Description	**Units**	**Quantity**	**Unit Cost**	**Subtotal Cost**	**Notes**
A. Transportation and Disposal of Waste Inventory					
Waste (sweeps) in containers	pounds	3640	$0.25	$910	Assumes offsite treatment as hazardous waste. Disposal rate is arbitrary because of approximate precious metals recovery value of $1.9 million, based on value indicated in Exhibit 5.
B. Decontamination					
Vacuum of floors, walls, and equipment	hours	7	$75	$525	Assumes 650 ft^2 floor, 480 ft^2 walls (4 ft high around entire room), 200 ft^2 of equipment surfaces. Assumes 0.005 hr/ft^2 based on 2016 RSMeans for HEPA vacuuming (line number 028213420100). Unit hourly rate based on General Environmental Laborer.
Pressure wash of floors, walls, and equipment	hours	40	$75	$3,000	Assumes triple washing of 650 ft^2 floor, 480 ft^2 walls, and 200 ft^2 equipment at a rate of 0.011 hr/ft^2 based on 2016 RSMeans for steam cleaning masonry (line number 040130202000). Unit hourly rate based on General Environmental Laborer.
C. Dismantling, Transportation, and Disposal of Processing Equipment					
Equipment dismantling	hours	8	$75	$600	Unit hourly rate based on General Environmental Laborer
Transportation and disposal of equipment	cubic yards	3	$78	$234	Assumes transportation to LA County Sanitation District Scholl Canyon solid waste landfill in Glendale, tipping fees OF $58.24/ton for hard-to-handle bulky items, $20/ton for transportation, transportation distance of 12 miles, and density of 1 ton/yd^3.
D. Transportation and Disposal of Cleaning Residuals					
Transportation and disposal of solid cleaning debris (dust from vacuuming and disposable cleaning equipment)	drum	1	$290	$290	Assumes disposal as hazardous waste. Combined rate for pickup and disposal of drum from 2016 RSMeans (line item 28120101100). Nearest hazardous waste landfill is within 180 miles.

REDLINE/STRIKEOUT

Table 9: Estimated Closure Cost					
Description	**Units**	**Quantity**	**Unit Cost**	**Subtotal Cost**	**Notes**
Transportation and disposal of washwater - first rinse	gallons	800	$2.20	$1,760	Assumes 2 gpm washwater generated with pressure washer running 50% of labor hours (remaining time is for setup, water management, and cleanup). Assumes offsite treatment as hazardous waste. Unit cost reflects vendor combined rate for transportation (25 miles) and disposal as hazardous waste.
Transportation and disposal of washwater - second and third rinses	gallons	1600	$0.18	$289	Assumes volume of water is same as first rinse. Assumes offsite disposal as nonhazardous waste. Unit cost reflects vendor combined rate for transportation (20 miles) and treatment based on lump sum pricing of $289 for up to 2,000 gallons (based on actual disposal pickup and disposal cost for similar waste generated during environmental cleaning under USEPA oversight at Santa Monica Municipal School District).
E. Post-Decontamination Sampling					
Labor for sampling washwater	hour	1	$150	$150	-
Analysis of rinsewater samples for total metals	sample	4	$115	$460	Includes samples of first and second rinses, 1 sample of unused water and 1 QA/QC sample, all analyzed for CAM 17 metals.
SUBTOTAL	-	-	-	**$8,218**	-
PE Certification (10 percent)	-	-	-	$1,000	Rounded to nearest $1,000.
Contingency (20 percent)	-	-	-	$1,644	-
TOTAL	-	-	-	**$10,862**	-

REDLINE/STRIKEOUT

REDLINE/STRIKEOUT

~~Table 9: Estimated Closure Cost~~					
~~Description~~	~~Units~~	~~Quantity~~	~~Unit Cost~~	~~Subtotal Cost~~	~~Notes~~
~~A. Transportation and Disposal of Waste Inventory~~					
~~Maximum waste inventory~~	~~pounds~~	~~3,640~~	~~$1.00~~	~~$3,640~~	~~Assumes disposal as hazardous waste.[Note 1]~~
~~B. Decontamination~~					
~~Vacuum and pressure wash of floors and equipment~~	~~man-hours~~	~~8~~	~~$100~~	~~$800~~	~~-~~
~~C. Transportation and Disposal of Cleaning Residuals~~					
~~Waste from vacuuming floors and equipment~~	~~pounds~~	~~100~~	~~$1.00~~	~~$100~~	~~Assumes vacuumed residual sweeps would be disposed of as hazardous waste.[Note 1]~~
~~Washwater from floor cleaning of storage and processing areas~~	~~gallons~~	~~130~~	~~$2.20~~	~~$286~~	~~Assumes pressure washing of floor of the entire storage and processing room (650 ft^2) and generation of 0.2 gallons of washwater per square foot. Assumes offsite treatment as hazardous waste.[Notes 2, 3, 4]~~
~~Washwater from cleaning processing equipment~~	~~gallons~~	~~120~~	~~$2.20~~	~~$264~~	~~Assumes pressure washing of all equipment and generation of 10 gallons of washwater per unit and 50 gallons for ancillary equipment (kiln hoods and ducting). Assumes offsite treatment as hazardous waste. [Note 4]~~
~~Disposable equipment and debris from cleaning~~	~~drum~~	~~1~~	~~$500~~	~~$500~~	~~Assumes disposal as hazardous waste.[Note 1]~~
~~C. Post-Decontamination Sampling~~					
~~Labor for sampling equipment and flooring surfaces and washwater~~	~~man-hours~~	~~4~~	~~$150~~	~~$600~~	~~-~~
~~Analysis of wipe samples and washwater samples~~	~~sample~~	~~20~~	~~$115~~	~~$2,300~~	~~Includes 17 wipe samples, 2 QA/QC samples, and 1 washwater sample, all analyzed for CAM 17 metals.~~
~~SUBTOTAL~~				~~$8,500~~	~~-~~
~~PE Inspection and certification (10 percent)~~				~~$850~~	
~~Contingency (20 percent)~~				~~$1,700~~	~~-~~
~~TOTAL~~				~~$11,050~~	~~-~~

~~Notes:~~

~~[1] Unit cost reflects vendor combined rate for transportation and disposal. Transportation distance is 180 miles.~~

~~[2] The overall dimensions of the room are 41.5 feet by 19 feet, minus the small room in the northwest corner that is not used for sweeps storage / processing and will not require decontamination and which is 9.5 feet by 14.5 feet, resulting in an overall area to be decontaminated of 650 square feet.~~

~~[3] DTSC's guidance states that washwater volumes may be estimated as 4 gallons per square foot. However, this is unrealistically high as it would result in 6 inches of standing water in the room. A typical pressure washer that would be small enough to be used in the Sweeps Storage and Processing Room would discharge 2-4 gallons per minute and could clean about 1,000 square feet per hour, resulting in 0.1 to 0.2 gallons of washwater per square foot.~~

~~[4] Unit cost reflects vendor combined rate for transportation and disposal as hazardous waste. Transportation distance is 25 miles.~~

REDLINE/STRIKEOUT

10.10 CLOSURE SCHEDULE

ATLAS shall notify DTSC its intent of closure at least 90 days prior to the beginning of the closure plan implementation. All wastes will be removed and structures/equipment decontaminated within 90 days of the date that the facility stops receiving hazardous waste or the closure plan was approved, whichever is later. All closure activities will be completed within 180 days of the date that the facility stopped receiving hazardous waste or the closure plan was approved whichever is later.

10.11 CLOSURE HEALTH AND SAFETY PLAN

At the time of closure, a health and safety plan will be prepared by ATLAS or its closure contractor to provide protection to personnel during the closure activities. The plan will be reviewed and approved by a certified industrial hygienist.

10.12 CLOSURE CERTIFICATION

After all closure activities have been completed, a closure certification will be submitted to DTSC by registered mail within 60 days of completion.

REDLINE/STRIKEOUT

11. CERTIFICATIONS

The following certifications are provided in accordance with DTSC's instructions for the Standardized Permit application:

- Security
- Location, Seismic and Precipitation Information
- Manifest System, Record Keeping, and Reporting
- Preparedness and Prevention

REDLINE/STRIKEOUT

11.1 SECURITY

I hereby certify the following:

- I have read and understood Sections 66264.14, and 66270.14(b)(4), Title 22 of the California Code of Regulations (Security).
- The security procedures and equipment for my facility will be in compliance with these regulations.
- I understand that this certification is an integral part of the formal application for a Standardized Permit for my facility and that any falsification is equivalent to a false statement under Health and Safety Code Section 25191 and may be grounds for a permit denial.

_____

Signature

_____

Printed Name

_____

Date

Atlas Precious Metals, Inc.
640 South Hill Street, Suite 743
Los Angeles, California 90014

REDLINE/STRIKEOUT

11.2 FACILITY LOCATION, SEISMIC AND PRECIPITATION INFORMATION

I hereby certify the following:

- I have read and understood Sections 66264.25 and 66270.14(b)(11), Title 22, of the California Code of Regulations on Facility location, Seismic and Precipitation Information.
- I certify that the nearest fault to my facility is Santa Monica Fault and is six miles away from my facility.
- I certify that my facility is not in the 100-year flood plain; otherwise I will provide the information required under section 66270.14 (b)(11)(D).
- I understand that this certification is an integral part of the formal application for a Standardized Permit for my facility and that any falsification is equivalent to a false statement under Health and Safety Code Section 25191 and may be grounds for a permit denial.

_____

Signature

_____

Printed Name

_____

Date

Atlas Precious Metals, Inc.
640 South Hill Street, Suite 743
Los Angeles, California 90014

REDLINE/STRIKEOUT

11.3 MANIFEST SYSTEM, RECORD KEEPING AND REPORTING

I hereby certify the following:

- I have read and understood sections 66264.70 through 66264.78, Title 22, of the California Code of Regulations on Manifest System, Record Keeping and Reporting requirements. I will have or prepare, for my facility, the required records and reports to be in compliance with all applicable regulations.

- I certify that a copy of the required records or reports will be maintained at my facility and will be available to local, state or federal agencies upon request. I understand that this certification is an integral part of the formal application for a standardized permit for my facility. And that any falsification is equivalent to a false statement under Health and Safety Code section 25191 and may be grounds for a permit denial.

- My facility is (or is not) an offsite facility. I have sent a notice to generators that may use my facility's services and I have the appropriate permit(s) (section 66264.12(b)). A copy of my notice is kept in my facility.

_____

Signature

_____

Printed Name

_____

Date

Atlas Precious Metals, Inc.
640 South Hill Street, Suite 743
Los Angeles, California 90014

REDLINE/STRIKEOUT

11.4 PREPAREDNESS AND PREVENTION

I hereby certify the following:

- I have read and understood Sections 66264.30 through 66264.35, 66264.37, and 66270.14(b)(8) and (b)(9), Title 22 of the California Code of Regulations (Preparedness and Prevention).
- The procedures and equipment for my facility will be in compliance with these regulations. My facility will be designed, constructed, maintained and operated to minimize the possibility of a fire, explosion, or any unplanned sudden or non-sudden release of hazardous waste or hazardous waste constitutes to air, soil, or surface water which could threaten human health or the environment.
- I understand that this certification is an integral part of the formal application for a Standardized Permit for my facility and that any falsification is equivalent to a false statement under Health and Safety Code Section 25191 and may be grounds for a permit denial.

_____

Signature

_____

Printed Name

_____

Date

Atlas Precious Metals, Inc.
640 South Hill Street, Suite 743
Los Angeles, California 90014

REDLINE/STRIKEOUT

12. FINANCIAL RESPONSIBILITY

A trust agreement/standby trust agreement for the full amount of the estimated closure cost is presented in Exhibit 6.

REDLINE/STRIKEOUT