HAZARDOUS WASTE STORAGE FACILITY PERMIT APPLICATION
SAFETY-KLEEN SYSTEMS, INC.
LOS ANGELES, CALIFORNIA

EPA ID# CAT000613935

August 2018

Revised March 2020

PART Page

PART I - FACILITY IDENTIFICATION

A. Facility I-2
B. USGS Topographic Map I-5
C. Owner I-6
D. Operator I-6
E. Statement That Facility is on/is Not on Indian lands I-7
F. Facility contact I-7
G. Preparer of operation plan I-7
H. Listing of all permit and construction approvals received applied for I-8
I. Listing of all RCRA and California wastes and annual amounts to be handled I-8
J. Description of all processes and types of units to handle wastes and the design capacity of each..I-9
K. Owner/Operator signatures and certification I-10
L. Waste minimization certification I-10
M. Confidentiality requests and justifications I-10
N. Disclosure Statement Form I-11

PART I – TABLES

I-1 Wastes and Quantities Handled

PART I – FIGURES

I-1 Site Location Map
I-2 Topo Map (Scale 1 inch=200 feet)
I-3 Topo Map (One-mile Radius)
I-4 Site Plan

PART I - APPENDICES

I-1 Part A Application
I-2 Safety-Kleen Closed Loop System
I-3 Property Deed and legal Description
I-4 DTSC's Acknowledgement of RFI Completion and Well abandonment Documentation
I-5 Owner and Operator Certification
I-6 Environmental Permits
I-7 Waste Minimization Certification
I-8 Facility Photographs

PART II - FACILITY LOCATION

A. Detailed Topographic map including II-1
B. Information associated with maps II-9
C. Distance from Holocene faults II-11
D. Hydro-geologic information II-11
E. Identify whether the facility lies within a 100-year Floodplain and include II-11
F. If the facility lies within the 100-year floodplain, provide the following information II-12

PART II – FIGURES

II-1 Assessors Index Map
II-2 Floodplain Map
II-3 Wind Rose Map
II-4 Zoning Map
II-5 Traffic Flow Patters

PART II – APPENDICES

II-1 Definitions of FEMA Floodplain Zone Designations

PART III - WASTE ANALYSIS PLAN

A. Waste Acceptance Procedures III-3
B. Waste Identification and General Information III-4
C. Waste Analysis Parameters III-7
D. Waste Sampling and Sample Management III-8
E. Waste Analysis Procedures III-9
F. Conditions Requiring & Frequency of Repeated Sampling and Analysis III-13
G. Additional Requirements for Off-Site Facilities III-14
H. QA/QC Procedures III-14
I. Waste Analysis Requirements Pertaining to Land Disposal Restrictions III-18
J. Waste Analysis Requirements for Wastes to be Incinerated III-19
K. Ignitable, Reactive and Incompatible Wastes III-20

PART III - TABLES

III-1 Estimated Monthly and Annual Amounts of Permitted Wastes Handled
III-2 Test Methods
III-3 Rationale for Selection of Parameter(s)
III-4 Quantitative Acceptance Criteria

PART III - APPENDICES

III-1 Safety Data Sheets for Mineral Sprits and Aqueous Parts Washer Solvents
III-2 Example of Hand-Held Receipt
III-3 Example Waste Profile
III-4.A 2019 AR Data Summary for Waste Mineral Spirits Solvent
III-4.B 2019 AR Data Summary for Waste Aqueous Parts Washer
III-4.C 2019 AR Data Summary for Waste Mineral Spirits Solvent Tank Bottoms
III-4.D 2019 AR Data Summary for Waste Aqueous Parts Washer Tank Bottoms
III-5 Annual Re-characterization Sampling Guidelines
III-6 Example- SK Chain of Custody Form

PART IV - FACILITY DESIGN

A. Containers IV-2
B. Tanks used for storage or treatment IV-14

PART IV – FIGURES

IV-1 Container Configurations in Drum Storage Arear
IV-2 Return and Fill Shelter Piping Schematic
IV-3 Return and Fill Station and Details
IV-4A Return and Fill Shelter Tag Information
IV-4B Drum Washer/Dumpster Isometric
IV-5 Tank system Piping & Instrumentation Diagram

PART IV - APPENDICES

IV-1 Container Storage Areas Certification
IV-2 Waste Underground Tank Certification
IV-3 Assessment of the Installation of Underground Storage Tanks (December 1993)

PART V – AIR EMISSIONS STANDARDS

A. Description of process vents and all associated operations V-2
B. Methods for reducing emissions from process vents V-5

C. Monitoring and Inspection of Control Devices V-6
D. Closed-Vent Systems V-7
E. Recordkeeping and reporting requirements for control devices and closed-vent systems V-8
F. Equipment description V-9
G. Standards for pumps in light liquid service V-10
H. Standards for compressors V-11
I. Standards for pressure relief devices in gas/vapor service V-11
J. Standards for connecting systems V-12
K. Standards for open-ended valves and lines V-13
L. Standards for valves in gas/vapor service or light liquid service V-13
M. Standards for pumps and valves in heavy liquid service, pressure relief devices in light liquid or heavy liquid service, and flanges and other connections V-14
N. Compliance testing V-15
O. Recordkeeping and reporting requirements for equipment V-16
P. Subpart CC Standards V-17
Q. Surface Impoundment Standards V-22
R. Container Standards V-22
S. Inspection and Monitoring Requirements V-24
T. Recordkeeping Requirements V-24
U. Reporting Requirements V-24
V. Emission Monitoring Requirements V-25
W. Information on the potential for the public to be exposed to releases V-26

PART V – APPENDICES
V-1 Subpart BB Inspection Procedures and Example Leak detection & Repair Record
V-2 Subpart CC Compliance Plan

PART VI – ENVIRONMENTAL MONITORING AND RESPONSE PROGRAMS
A. Groundwater monitoring VI-1
B. Surface water monitoring VI-5
C. Soil pore liquid monitoring VI-10
D. Air monitoring VI-14
E. Soil-pore gas and soil monitoring VI-17

PART VII – SECURITY
A. Access control measures such as a 24-hour surveillance system which continuously monitors and controls entry VII-1
B. Other access control measures such as VII-1
C. Barriers, completely surrounding active portions, capable of preventing unauthorized entry of persons or animals – indicate: VII-2
D. Warning signs which must be: VII-2
E. Waiver of security requirements VII-3

PART VIII – MANAGEMENT PRACTICES
A. Identify waste handling equipment including associated safety features VIII-2
B. Equipment to be used for safely unloading containers and handling containers of hazardous waste from vehicles VIII-4
C. Use of the manifest (offsite facilities only) VIII-4
D. Control of hazardous wastes in general VIII-7
E. Facility inspection VIII-12
F. Precautions for ignitable, reactive, and incompatible wastes VIII-19
G. Operating records VIII-20

H. Unmanifested waste report VIII-21
I. Annual report VIII-21
J. Records available for DTSC inspection VIII-22
K. Additional reports VIII-23

PART VIII – APPENDICES
VIII-1 Inspection Frequencies & Example Inspection Checklists
VIII-2 Available Monitoring, Safety, and Emergency Equipment

PART IX – PERSONAL TRAINING PROGRAM
A. Introductory program outline IX-1
B. Continuing program outline IX-4
C. Length of time records kept IX-9

PART IX – TABLES
IX-1 Introductory and Continuing Training

PART IX – APPENDICES
IX-1 Example Introductory Training Outline
IX-2 Example Core (RCRA/Part B) Training Outline
IX-3 Example of Job Descriptions
IX-4 Example Training Matrix

PART X - CONTINGENCY PLAN AND EMERGENCY PROCEDURES
A. Location Design and Operation of the facility X-2
B. Required Equipment X-3
C. Testing and Maintenance X-5
D. Access to Communications Devices or Alarms X-6
E. Required Aisle Space X-6
F. Arrangements with Local Authorities X-6
G. General Hazard Prevention X-7
H. Purpose and Implementation of Contingency Plan X-11
I. Contents of the Contingency Plan X-12
J. Copies of the Contingency Plan X-23
K. Amendment of the Contingency Plan X-23
L. Emergency Coordinator Responsibilities X-24
M. Container Spills and Leakage X-30
N. Tank Spills and Leakage X-30
O. Surface Impoundment Spills and Leakage X-31
P. Waste Pile Spills and Leakage X-32
Q. Drip Pad Spills and Leakage X-32
R. Safety and Emergency Equipment X-32
S. Water Supply X-35
T. Backflow Protection X-35

PART X – TABLES
X-1 Emergency Equipment Inspection Frequency

PART X - FIGURES
X-1 Emergency Evacuation Map
X-2 Emergency Equipment Location Map

PART X - APPENDICES

X-1 Example of Daily Subpart BB Inspection Checklist
X-2 List of Safety and Emergency Equipment
X-3 Documentation of Arrangements with Local Emergency Responders
X-4 Emergency Notification List (with and without emergency coordinators home addresses)

PART XI - CLOSURE AND POST-CLOSURE PLANS

A. Closure Plan XI-1
B. Maximum Waste Inventory XI-1
C. Schedule for Closure XI-2
D. Closure Procedures XI-2
E. Final Disposition of Waste Management Units Following Decontamination XI-5
F. Soil Sampling at Closure XI-6
G. Vapor Sampling at Closure XI-7
H. Closure Certification XI-9
I. Post-Closure Plan/Contingent Post Closure…. XI-10
J. Closure Cost Estimate XI-10
K. Post-Closure Cost Estimate XI-10
L. Closure Plan amendment XI-10

PART XI - TABLES

XI-1 Parameters and Test Methods

PART XI – FIGURES

XI-1 Tentative Background Sampling Location

PART XI - APPENDICES

XI-1 Closure Schedule and Closure Cost Estimate

PART XII - FINANCIAL RESPONSIBILITY

A. Financial Assurance Mechanisms for Closure XII-1
B. Financial Assurance Mechanism for Post-Closures XII-1
C. Liability Coverage Mechanism XII-2

PART XII - APPENDICES

XII-1 Insurance Certificate for Closure
XII-2 Hazardous Waste Facility Liability Certificate of Insurance

PART I

FACILITY IDENTIFICATION

I. FACILITY IDENTIFICATION

Identification Number Form (new facility only)
(22 CCR 66264.11)
(40 CFR 264.11)

The EPA ID number is CAT000613935.

Part A Application, which identifies:
(22 CCR 66270.10(d), 66270.11(a), 66270.13)
(40 CFR 270.10(d), 270.11(a), 270.13)

This permit application is for a hazardous waste storage facility located in Los Angeles, California. Safety-Kleen Systems, Inc. (Safety-Kleen) operates a branch at this location to provide waste reclamation services to its customers. The "Hazardous Waste Permit Part A Form", and the "RCRA Subtitle C Site Identification Form" are included as Appendix I-1.

A. Facility

(22 CCR 66270.13)
(40 CFR 270.13)

1. **Facility Name** - Safety-Kleen Systems, Inc. Los Angeles Branch

2. **ID Number** - The ID number is CAT000613935.

3. **Location** - The facility is located at 2918 Worthen Avenue in Los Angeles, California. The location is shown on Figure I-1 (USGS Topographic Map), Figure I-2 (topographic map of a scale of 1 inch equals 200 feet), and Figure I-3 (topographic map of one-mile radius).

4. **Mailing Address** – 2918 Worthen Avenue, Los Angeles, California 90039.

5. **Telephone Numbers** –
   (972) 265-2000 (Company headquarters)
   (323) 984-9528 (Los Angeles Branch)

6. **Description of business conducted -** Safety-Kleen is a service-oriented company whose customers are primarily engaged in automotive repair, industrial maintenance, and dry cleaning. The company, in operation since 1968, offers solvent collection and reclamation services to hundreds of customers nationwide.

   The Los Angeles Branch is a facility which leases and services Safety-Kleen parts cleaning equipment and solvents to Safety-Kleen customers. The Branch also collects used parts washer solvent (including, but not limited to, Safety-Kleen Premium, and aqueous-based solvents), spent

immersion cleaner, dry cleaning wastes (perchloroethylene), paint waste and lacquer thinner, spent antifreeze, used oil, and transfer wastes.

The Safety-Kleen Los Angeles Branch operates two nominal 12,000-gallon underground storage tanks (USTs) and two drum washer units. One UST stores spent parts washer solution (petroleum or aqueous-based solvents) received from the Return and Fill (R&F) area. Petroleum- and aqueous-base parts washers are not comingled. Currently only aqueous-based parts washer is stored in the UST. The other UST is used for storage of clean product.

There are two drum washer units located in the R&F area and have a capacity of 155 gallons each. Spent parts washer solution (including petroleum or aqueous based solvents), is poured from the containers into the drum washer unit and then transferred into the waste UST. All wastes drain through the drum washer into the tank. The drum washers are also used for cleaning containers that previously held spent parts washer solvent. In the unlikely event that the rinsate may contaminate the recyclable solvent, the drum washer units will be isolated from the USTs, and the drum washer will then be cleaned (rinsed with solvent) prior to being utilized for transfer of solvent to the UST. The rinsate will then be containerized for future transfer. The Site Plan in Figure I-4 shows the location and layout of the USTs and the Return and Fill Area.

The facility will only terminate parts washer solvent (petroleum-based or aqueous-based). Parts washer solvent containers are off-loaded near R&F area, and are emptied in the waste UST within 24 hours of receipt at the facility. When containers are not emptied within 24 hours of receipt at the facility, they are stored in any of the three permitted container storage areas (Units A, B, and C). All other containers are managed as 10-day transfer wastes at the Branch. These containers may be stored in any of the permitted storage room, or in another warehouse. When transfer wastes are stored in the permitted rooms, permit conditions for storage rooms applies. Periodically, a Safety-Kleen truck is dispatched to the Branch to collect and transport the wastes to a designated Safety-Kleen recycle center, operation center, or other properly permitted facility for consolidation. Wastes that are reclaimed for reuse such as the used parts washer solvent are processed through Safety-Kleen's Closed Loop System (Appendix I-2).

7. Description of activities requiring permit

a. On site – One 12,000-gallon UST will be used for storage of used parts washer solution (petroleum or aqueous-based). Each of the drum washer units located east of the administrative offices separates extraneous solids from the used parts washer solvent

waste streams prior to storage in the waste solvent UST. Each unit has screens, which are intended to remove extraneous solids, such as nuts, bolts, rags, sediment, etc., to protect pumps in the tank system. Other hazardous wastes are stored in container storage areas.

b. **Off site -** Safety-Kleen offers solvent collection and reclamation services to over 390,000 customers nationwide. The Branch collects wastes from customers including used parts washer solvent, spent immersion cleaner, dry cleaning wastes, spent antifreeze, used oil, paint waste/lacquer thinner. The only waste that will be terminated at the facility (permitted) is parts washer solvent. All other wastes are managed as 10-day transfer wastes. Safety-Kleen maintains a list of transfer wastes as part of the operation log. Periodically, a Safety-Kleen truck is dispatched to the Branch to collect and transport wastes to a designated recycle center or operation center for consolidation. In general, waste stored at this facility is generated off site and is transferred to this facility for storage.

8. North American Industry Classification System (NAICS) Codes

Safety-Kleen operations are classified under the following NAICS codes:

- 5621 Waste Collection including Hazardous Waste Collection (562112)
- 48422 Specialized Freight Trucking, Local
- 48423 Specialized Freight Trucking, Long Distance
- 53249 Other Commercial and Industrial Machinery and Equipment Rental and Leasing

9. Statement that the facility is:

a. **new or existing -** This is an existing facility.

b. **that the application is first or revised -** This application is a permit renewal application.

c. **date of last signed permit -** The effective date of the last signed permit was March 17, 2009 expiring on March 17, 2019.

10. Latitude and longitude

Latitude - 34°, 06', 25" North
Longitude - 118°, 15", 07" West

11. **Scale drawing showing past, present, future, TSD areas (existing facility only) -** A site plan for the facility is shown on Figure I-4.

12. **Photographs showing structures, existing and future TSD areas (existing facility only)**

    Photographs of the structures and waste storage areas are included as Appendix I-8.

B. USGS Topographic Map Showing:
(22 CCR 66270.13(l))
(40 CFR 270.13(l))

The facility is located in the City of Los Angeles. The facility location and the surrounding areas within a 2000-foot radius, and 1-mile radius of the facility are shown on Figures I-2, and I-3, respectively. These maps show the features required in this section.

1. **1 mile beyond area encompassing all hazardous waste management units at facility -** A 1-mile radius is drawn on the USGS topographic map (Figure I-3).

2. **Property boundaries** - The boundaries of the facility are shown on Figure I-3. The property deed and legal description are presented in Appendix I-3.

3. **Intake and discharge structures -** No intake or discharge structures are located at the facility.

4. **Injection wells** - No underground injection wells are located at the facility.

5. **Location of:**

    a. **Wells** – There are no wells located on site. See Appendix I-4 for the May 29, 2009 letter from Department of Toxic Substances Control (DTSC) acknowledging completion of the RCRA Facility Investigation (RFI), and documentation of well abandonment activities in October 2009.

    b. **Springs** - No springs occur within a 1-mile radius of the facility

    c. **Surface Water Bodies** – The Los Angeles River is located approximately 500 feet from the facility and Silver Lake is approximately ¼ mile from the site (see Figure I-3).

    d. **Drinking Water Wells** – No drinking water wells are located within

1 mile of the facility.

e. **Public Water Supply Systems** - There are no open channel aqueduct systems for public potable water supply near the site region. Domestic water service is provided by the Metropolitan Water District and the City of Los Angeles.

6. Hazardous Waste facilities:

a. **Transfer** - This activity is exempt from permit requirements as per 22 CCR 66270.1(c)(2)(vi).

b. **Treatment** – Treatment is conducted in the Miscellaneous Unit (R&F station).

c. **Storage** - As shown on Figure I-4, storage units include two 12,000-gallon UST located east of the administrative offices and three container storage areas, designated units “A”, “B”, and “C” located in the northern portion of the warehouse.

d. **Disposal** - No disposal of hazardous waste is performed at this facility.

7. Each building and its use

The facility has a warehouse building. In addition to the container management areas, this building contains the facility’s administrative offices (see Figure I-4).

C. Owner
(22 CCR 66270.13(e))
(40 CFR 270.13(e))

1. Name of Owner - Safety-Kleen Systems, Inc.

2. Mailing Address – 2600 North Central Expressway, Richardson, TX 75080

3. Telephone Number - (972) 265-2000 (Company Headquarters)

4. Ownership Status - Safety-Kleen Systems, Inc. is the owner of this facility.

5. Status as federal, state, private, public or other entity - The owner is a private entity.

D. Operator
(22 CCR 66270.13(d)) (40 CFR 270.13(d))

1. **Name** - Safety-Kleen Systems, Inc.

2. **Mailing Address** - Safety-Kleen Systems, Inc., 2918 Worthen Avenue, Los Angeles, California 90039

3. **Telephone Number** - (323) 660-9562

4. **Ownership status** - Safety-Kleen Systems, Inc. is the owner of this facility.

5. **Status as federal, state, private, public or other entity -** The operator is a private entity.

E. Statement that facility is or is not on Indian lands
(22 CCR 66270.13(f))
(40 CFR 270.13(f))

Safety-Kleen Systems, Inc. asserts that, to the best of its knowledge, the facility property is not located on Indian lands.

F. Facility Contact
(22 CCR 66270.14(b)(19))

1. **Name** – Gabriel Medel,

2. **Title** - Los Angeles Branch General Manager.

3. **Work telephone number** - (323) 660-9562.

4. **Name and address of company** - Safety-Kleen Systems, Inc, Los Angeles Branch, 2918 Worthen Avenue, Los Angeles, California 90039.

G. Preparer(s) Operation Plan
(22 CCR 66270.11, 66270.14(a) and (b)(19))
(40 CFR 270.11, 270.14(a))

1. **Firm** - Safety-Kleen Systems, Inc.

2. **Person(s) responsible –**Nahid Toossi.

3. **Title(s)** – Director Environmental Compliance Manager.

4. **Work telephone number** – 714-429-4355

5. **Dated, original signature(s) -** The owner/operator signature is presented in Appendix I-5.

6. **Certification(s) required under 662670.11(d) -** The owner/operator certification is presented in Appendix I-5.

7. **For design drawings, specifications, reports, plans and other documents required to be certified by an engineer or geologist registered in California, also provide:**

   a. **Required stamp or other form of certification**

   b. **Engineer's or geologist's registration number and expiration date**

      All engineering certifications are provided in Appendices IV-1 (Container Storage Areas), and IV-2 (tanks) of this application.

H. Listing of All Permits and Construction Approvals Received/Applied For: (22 CCR 66270.13(k)) (40 CFR 270.13(k))

Listing of environmental permits is included in Appendix I-6 and in Part A of the application.

I. List of RCRA and California Wastes and annual amounts to be handled (22 CCR 66270.13(j)) (40 CFR 270.13(j))

Table I-1 below presents the waste types and amounts that will be terminated at the facility (permitted wastes).

Table I-1
Wastes and Quantities Handled

Waste Description	Federal Waste Code	California Waste Code	Estimated Monthly Amount (pounds)	Estimated Annual Amount (pounds)
Used parts washer solvent (Premium solvent [1] , Aqueous Solvent)	D001, D004 through D011, D018, D039, D040	133, 134 213, 135	250,000	3,000,000

[1] Solvent may be nonhazardous as a waste, depending on its use.

1. **Wastes generated on site –** On-site generated wastes include, but are not limited to, drum washer sediment, waste solvent tank bottom sediment, used personal protective equipment, used spill response absorbent, used sampling equipment, and samples retained for rebuttable presumption.

2. **Wastes generated off site -** This information is contained in Table I-1.

J. Description of all processes and types of units to be used to handle wastes and the design capacity of each
(22 CCR 66270.13(i) and (j))
(40 CFR 270.13(i) and (j))

1. **Storage** - The only waste that the facility receives (manifest terminated at the site) from Safety-Kleen customers is used parts washer solvent (Premium or aqueous-based solvents). Other wastes are managed on a transfer basis only (stored for less than 10 days). The facility has one nominal 12,000-gallon UST for storage of the parts washer solution (petroleum or aqueous- based solvent).

   The permitted hazardous waste container storage areas capacity is limited to a maximum of 5,540 gallons.

   - DSA A- 1,730 gallons
   - DSA B and C- 3,810 gallons

2. **Treatment** – Treatment is conducted in the Miscellaneous Unit (R&F station).

3. **Disposal** - Not applicable, Safety-Kleen does not dispose of hazardous waste at this facility.

(40 CFR 264.73(b)((9))

The original waste minimization certification is retained as part of the facility's written operating record. Safety-Kleen will renew this certification annually. A copy of the waste minimization certification is included in Appendix I-7.

M. Confidentiality requests and justifications (22 CCR 66270.12(a)) (40 CFR 270.12(a)

1. Extra copy of Part A and Part B application with confidential items deleted.

2. Length of time each item is to be considered a trade secret

3. Measures employed by owner/operator to maintain each item as a trade secret

4. List of other persons who have copies of each item, and measures they have taken to maintain each item as a trade secret

5. Decisions made by other governmental agencies regarding the confidentiality of each item

6. Identification and explanation of substantial harm if identified items are not maintained as trade secrets

The above items are not applicable because Safety-Kleen does not claim any information included in this operation plan as "Trade Secret".

N. Disclosure Statement Form No. 8430 (H&SC 25112.5)

Health & Safety Code (HSC) 25200.4 requires the submittal of a “Disclosure Statement” with the permit renewal application. HSC 25112.5 specifies the disclosure criteria. HSC 25112.5(c) allows publicly traded corporations and/or their subsidiaries to submit reports filed with the Securities Exchange Commission in lieu of a disclosure statement. Safety-Kleen systems, Inc. is a subsidiary of Clean Harbors, Inc. which is a publicly traded corporation on the New York Stock Exchange and registered with the Securities Exchange Commission (SEC). Clean Harbors’ SEC filings, including but not limited to annual and quarterly reports, are available in the Investor section of Clean Harbors website, at www.cleanharbors.com.

Figure I-1

Site Location Map

SITE LOCATION MAP

SAFETY KLEEN LOS ANGLES
2918 WORTHEN AVE FIGURE I-1

Figure I-2

Topographic Map (Scale of 1 inch= 200 feet)

TOPOGRAPHIC MAP OF SAFETY-KLEEN LOS ANGELES, CA STORAGE FACILITY

SCALE: 1 inch = 200 feet, 2,000 ft. radius

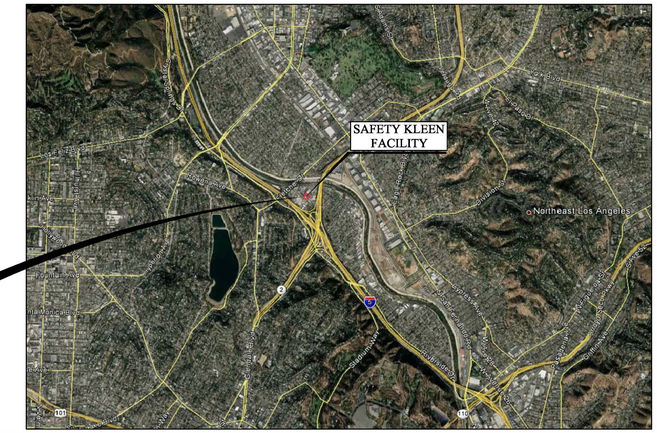

AERIAL PHOTOGRAPH SHOWING THE LOCATION OF THE FACILITY

NOTES:
1. ALL DATUM SHOWN BASED ON USGS NAVD 1988
2. SUBJECT PROPERTY IS WITHIN FEMA ZONE "X"
3. THERE ARE NO RECREATION AREAS, RUNOFF CONTROL SYSTEMS, INTERNAL ROADS, STORM, SANITARY AND PROCESS SEWER SYSTEMS OR FIRE CONTROL FACILITIES ON THIS SITE
4. THERE ARE NO BARRIERS FOR DRAINAGE OR FLOOD CONTROL ON THIS SITE.

ATTACHMENT I–1

ACAD-Los Angeles-CA.dwg, Aug 03, 2018, 9:10am

Figure I-3
Topographic map (one-mile radius)

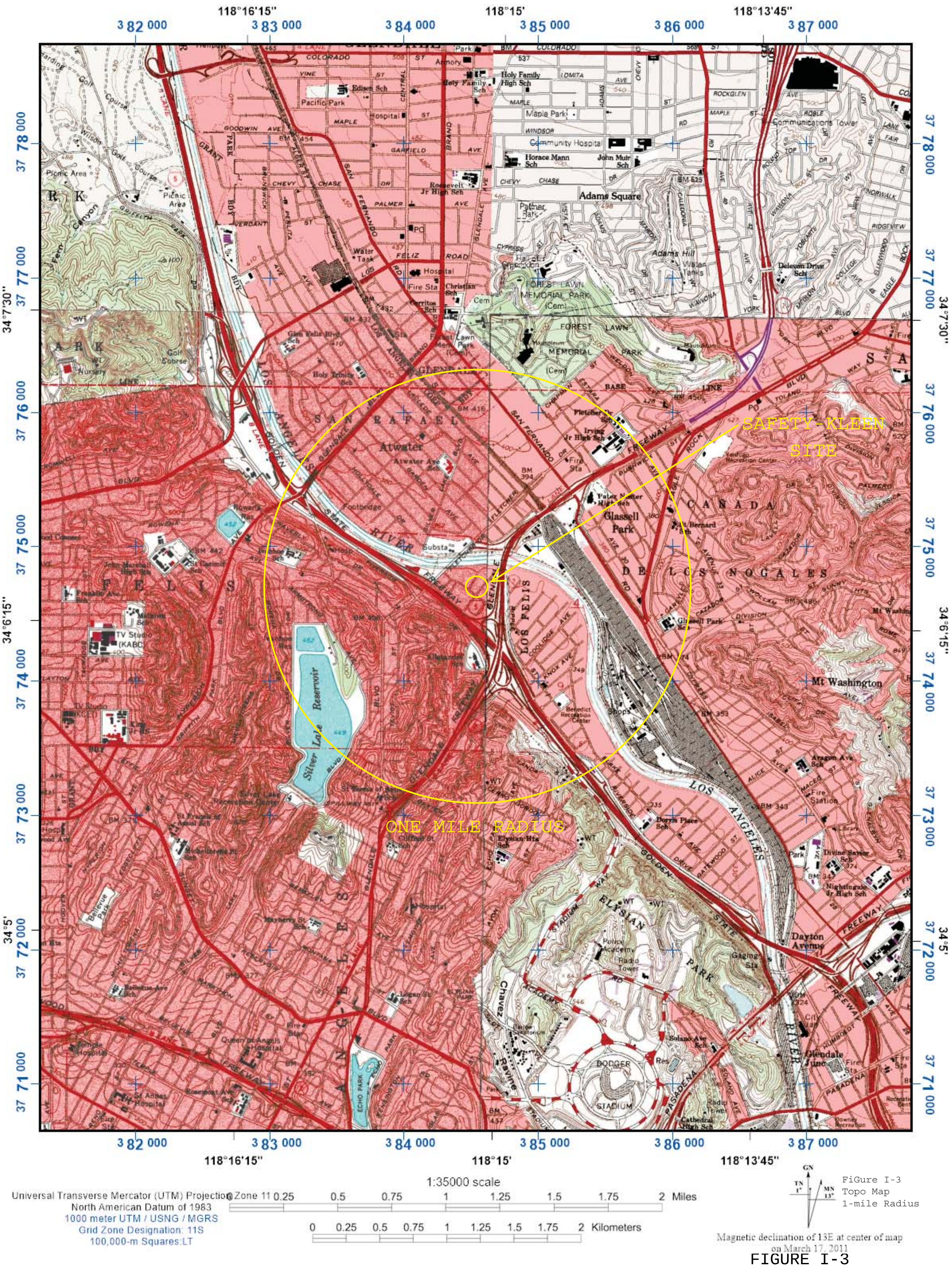
SAFETY-KLEEN SITE
ONE MILE RADIUS
Atwater
Glassell Park
Silver Lake Reservoir
Forest Lawn Memorial Park
Adams Square
Mt Washington
Elysian Park
Dodger Stadium
Los Angeles River
1:35000 scale
Universal Transverse Mercator (UTM) Projection Zone 11
North American Datum of 1983
1000 meter UTM / USNG / MGRS
Grid Zone Designation: 11S
100,000-m Squares:LT
Miles
Kilometers
Magnetic declination of 13E at center of map on March 17, 2011
FiGure I-3
Topo Map
1-mile Radius

FIGURE I-3

Figure I-4

Site Plan

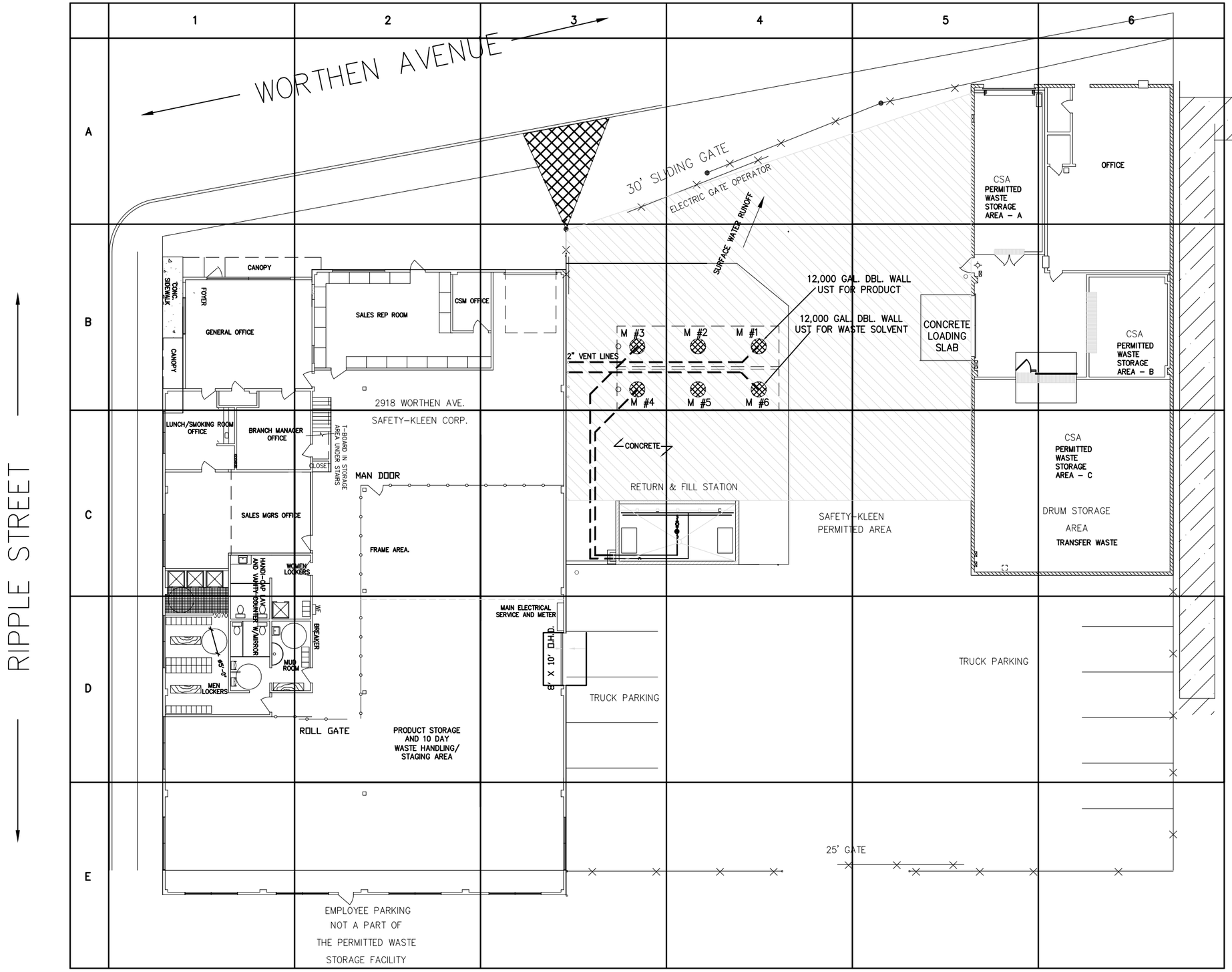

MANWAY SCHEDULE
M 1 : FILL PIPE AND VENT LINE SEE SK STD 1011-01 DETAIL D
M 2: ACCESS MANWAY
M 3: CLEAN SOLVENT PUMP AND HLA SK STD 1011-01 DETAIL A
M 4: WASTE SOLVENT DRAIN LINE SEE STD 1010-01 DETAIL C
M 5: ACCESS MANWAY SEE SK STD 1010-01 DETAIL B
M 6: FILL PIPE AND VENT LINE SEE SK STD 1011-01 DETAIL D

FIGURE I-4

NO.	DESCRIPTION	BY	CHK	APPR	DATE
13	REVISED FOR PERMIT	JEK	NT	NT	072518
12	REVISED FOR PERMIT	JEK	NT	NT	041318
11	REVISE TO SHOW CURRENT CONDITIONS	JEK	GM	GM	061715
10	REVISE TO SHOW CURRENT CONDITIONS	JEK	NT	NT	041115
09	ADD PROPOSED IMPROVEMENTS	JEK	SL	SL	110509
08	REVISE FENCE LOCATION	JEK	NT	NT	091609
07	REVISE NOTES/ EQP. LOCATIONS	JEK	NT	NT	061708
06	REVISE NOTES/ EQP. LOCATIONS	JEK	NT	NT	052808
05	REVISE TO SHOW CURRENT CONDITIONS	JEK	MC	MC	021408
04	ADD OUTDOOR CONTAINMENT AREAS	JEK	SL	SL	071807
03	REVISE TO SHOW CURRENT CONDITIONS	JEK	KP	KP	121406
02	REVISE TO SHOW CURRENT CONDITIONS	JEK	RG	NT	030206

REVISIONS

PROPRIETARY STATEMENT

THIS DRAWING IS THE EXCLUSIVE PROPERTY OF SAFETY-KLEEN SYSTEMS, INC. AND IS PROPRIETARY AND CONFIDENTIAL INFORMATION. THIS DRAWING AND THE INFORMATION CONTAINED THEREIN MUST NOT BE DUPLICATED, USED, DIVULGED, REPRODUCED, COPIED, DISCLOSED OR APPROPRIATED IN WHOLE OR IN PART FOR ANY PURPOSE OTHER THAT AS EXPRESSLY AUTHORIZED BY SAFETY-KLEEN SYSTEMS, INC. THIS DRAWING MUST BE RETURNED PROMPTLY UPON REQUEST.

TITLE

SITE PLAN
2918 WORTHEN AVE

SAFETY-KLEEN SYSTEMS, INC.
2600 N. CENT. EXPRESSWAY STE 400 RICHARDSON, TX. 75080
PHONE 800-669-5740

SCALE	BY	CHKD	P.E. APPR	DP. APPR	DATE
1"=20'	WEY	-	-	-	2-2-96

SERVICE CENTER BRANCH AT	STD-DWG-REV NO.
LOS ANGELES, CA	7116-SP00-001

APPENDIX I-1

Part A Application

(Part A and Site ID Forms)

PART A
SAFETY-KLEEN SYSTEMS, INC.
LOS ANGELES SERVI CE CENTER
LOS ANGELES, CALIFORNIA

EPA ID# CAT000613935

August 2018

Revised March 2020

United States Environmental Protection Agency
RCRA SUBTITLE C SITE IDENTIFICATION FORM

1. Reason for Submittal (Select only one.)

☐	Obtaining or updating an EPA ID number for an on-going regulated activity that will continue for a period of time. (Includes HSM activity)
☐	Submitting as a component of the Hazardous Waste Report for _____ (Reporting Year)
	☐ Site was a TSD facility and/or generator of > 1,000 kg of hazardous waste, > 1 kg of acute hazardous waste, or > 100 kg of acute hazardous waste spill cleanup in **one or more months of the reporting year** (or State equivalent LQG regulations)
☐	Notifying that regulated activity is no longer occurring at this Site
☐	Obtaining or updating an EPA ID number for conducting Electronic Manifest Broker activities
☑	Submitting a new or revised Part A Form

2. Site EPA ID Number

C	A	T	0	0	0	6	1	3	9	3	5

3. Site Name

Safety-Kleen Systems, Inc.

4. Site Location Address

Street Address	**2918 Worthen Ave.**		
City, Town, or Village	**Los Angeles**	County	**Los Angeles**
State **CA**	Country **USA**	Zip Code	**90039**

5. Site Mailing Address

☐ Same as Location Address

Street Address	**2918 Worthen Ave.**		
City, Town, or Village	**Los Angeles**		
State **CA**	Country **USA**	Zip Code	**90039**

6. Site Land Type

☑ Private ☐ County ☐ District ☐ Federal ☐ Tribal ☐ Municipal ☐ State ☐ Other

7. North American Industry Classification System (NAICS) Code(s) for the Site (at least 5-digit codes)

A. (Primary)	**562112**	C.	**53249**
B.	**48422**	D.	**48423**

8. Site Contact Information

☐ Same as Location Address

First Name **Gabriel**	MI	Last Name **Medel**
Title **Branch General Manager**		
Street Address **2918 Worthen Ave.**		
City, Town, or Village **Los Angeles**		
State **CA**	Country **USA**	Zip Code **90039**
Email **gabriel.medel@safety-kleen.com**		
Phone **323-660-9562**	Ext	Fax

9. Legal Owner and Operator of the Site

A. Name of Site's Legal Owner

☐ Same as Location Address

Full Name Safety-Kleen Systems, Inc.	Date Became Owner (mm/dd/yyyy) 8/1/1993

Owner Type

☑ Private ☐ County ☐ District ☐ Federal ☐ Tribal ☐ Municipal ☐ State ☐ Other

Street Address 42 Longwater Drive, P.O. Box 9149		
City, Town, or Village Norwell		
State MA	Country **USA**	Zip Code 02061-9149
Email Mori.sorenson@safety-Kleen.com		
Phone (781) 792-5000	Ext	Fax
Comments Mori Sorenson, Environmental Compliance Manager for West signs as owner		

B. Name of Site's Legal Operator

☐ Same as Location Address

Full Name Safety-Kleen Systems, Inc	Date Became Operator (mm/dd/yyyy) 8/1/1978

Operator Type

☑ Private ☐ County ☐ District ☐ Federal ☐ Tribal ☐ Municipal ☐ State ☐ Other

Street Address **2918 Worthen Ave.**		
City, Town, or Village **Los Angeles**		
State **CA**	Country **USA**	Zip Code **90039**
Email Mori.sorenson@safety-Kleen.com		
Phone **515-802-3440**	Ext	Fax
Comments **Mori Sorenson, Environmental Compliance Manager for West signs as operator**		

10. Type of Regulated Waste Activity (at your site)

Mark "Yes" or "No" for all current activities (as of the date submitting the form); complete any additional boxes as instructed.

A. Hazardous Waste Activities

☑ Y ☐ N	1. Generator of Hazardous Waste—If "Yes", mark only one of the following—a, b, c	
☑	a. LQG	-Generates, in any calendar month (includes quantities imported by importer site) 1,000 kg/mo (2,200 lb/mo) or more of non-acute hazardous waste; or - Generates, in any calendar month, or accumulates at any time, more than 1 kg/mo (2.2 lb/mo) of acute hazardous waste; or - Generates, in any calendar month or accumulates at any time, more than 100 kg/mo (220 lb/mo) of acute hazardous spill cleanup material.
☐	b. SQG	100 to 1,000 kg/mo (220-2,200 lb/mo) of non-acute hazardous waste and no more than 1 kg (2.2 lb) of acute hazardous waste and no more than 100 kg (220 lb) of any acute hazardous spill cleanup material.
☐	c. VSQG	Less than or equal to 100 kg/mo (220 lb/mo) of non-acute hazardous waste.
If "Yes" above, indicate other generator activities in 2 and 3, as applicable.		
☐ Y ☑ N	2. Short-Term Generator (generates from a short-term or one-time event and not from on-going processes). If "Yes", provide an explanation in the Comments section.	
☐ Y ☑ N	3. Mixed Waste (hazardous and radioactive) Generator	
☑ Y ☐ N	4. Treater, Storer or Disposer of Hazardous Waste—Note: A hazardous waste Part B permit is required for these activities.	
☑ Y ☐ N	5. Receives Hazardous Waste from Off-site	
☐ Y ☑ N	6. Recycler of Hazardous Waste	
☐	a. Recycler who stores prior to recycling	
☐	b. Recycler who does not store prior to recycling	
☐ Y ☑ N	7. Exempt Boiler and/or Industrial Furnace—If "Yes", mark all that apply.	
☐	a. Small Quantity On-site Burner Exemption	
☐	b. Smelting, Melting, and Refining Furnace Exemption	

B. Waste Codes for Federally Regulated Hazardous Wastes. Please list the waste codes of the Federal hazardous wastes handled at your site. List them in the order they are presented in the regulations (e.g. D001, D003, F007, U112). Use an additional page if more spaces are needed.

D001	**D004**	**D005**	**D006**	**D007**	**D008**	**D009**
D010	**D011**	**D018**	**D039**	**D040**		

Waste Codes for State Regulated (non-Federal) Hazardous Wastes. Please list the waste codes of the State hazardous wastes handled at your site. List them in the order they are presented in the regulations. Use an additional page if more spaces are needed.

133	**134**	**135**	**213**			

11. Additional Regulated Waste Activities (NOTE: Refer to your State regulations to determine if a separate permit is required.)

A. Other Waste Activities

☑ Y ☐ N	1. Transporter of Hazardous Waste—If "Yes", mark all that apply.
☑	a. Transporter
☑	b. Transfer Facility (at your site)
☐ Y ☑ N	2. Underground Injection Control
☐ Y ☑ N	3. United States Importer of Hazardous Waste
☐ Y ☑ N	4. Recognized Trader—If "Yes", mark all that apply.
☐	a. Importer
☐	b. Exporter
☐ Y ☑ N	5. Importer/Exporter of Spent Lead-Acid Batteries (SLABs) under 40 CFR 266 Subpart G—If "Yes", mark all that apply.
☐	a. Importer
☐	b. Exporter

B. Universal Waste Activities

☐ Y ☑ N	1. Large Quantity Handler of Universal Waste (you accumulate 5,000 kg or more) - If "Yes" mark all that apply. Note: Refer to your State regulations to determine what is regulated.
☐	a. Batteries
☐	b. Pesticides
☐	c. Mercury containing equipment
☐	d. Lamps
☐	e. Other (specify) _____
☐	f. Other (specify) _____
☐	g. Other (specify) _____
☐ Y ☑ N	2. Destination Facility for Universal Waste Note: A hazardous waste permit may be required for this activity.

C. Used Oil Activities

☑ Y ☐ N	1. Used Oil Transporter—If "Yes", mark all that apply.
☑	a. Transporter
☑	b. Transfer Facility (at your site)
☐ Y ☑ N	2. Used Oil Processor and/or Re-refiner—If "Yes", mark all that apply.
☐	a. Processor
☐	b. Re-refiner
☐ Y ☑ N	3. Off-Specification Used Oil Burner
☐ Y ☑ N	4. Used Oil Fuel Marketer—If "Yes", mark all that apply.
☐	a. Marketer Who Directs Shipment of Off-Specification Used Oil to Off-Specification Used Oil Burner
☐	b. Marketer Who First Claims the Used Oil Meets the Specifications

12. Eligible Academic Entities with Laboratories—Notification for opting into or withdrawing from managing laboratory hazardous wastes pursuant to 40 CFR 262 Subpart K.

☐ Y ☑ N	A. Opting into or currently operating under 40 CFR 262 Subpart K for the management of hazardous wastes in laboratories—If "Yes", mark all that apply. Note: See the item-by-item instructions for definitions of types of eligible academic entities.
☐	1. College or University
☐	2. Teaching Hospital that is owned by or has a formal written affiliation with a college or university
☐	3. Non-profit Institute that is owned by or has a formal written affiliation with a college or univer-
☐ Y ☑ N	B. Withdrawing from 40 CFR 262 Subpart K for the management of hazardous wastes in laboratories.

13. Episodic Generation

☐ Y ☑ N	Are you an SQG or VSQG generating hazardous waste from a planned or unplanned episodic event, lasting no more than 60 days, that moves you to a higher generator category. If "Yes", you must fill out the Addendum for Episodic Generator.

14. LQG Consolidation of VSQG Hazardous Waste

☐ Y ☑ N	Are you an LQG notifying of consolidating VSQG Hazardous Waste Under the Control of the Same Person pursuant to 40 CFR 262.17(f)? If "Yes", you must fill out the Addendum for LQG Consolidation of VSQGs hazardous waste.

15. Notification of LQG Site Closure for a Central Accumulation Area (CAA) (optional) OR Entire Facility (required)

☐ Y ☑ N	LQG Site Closure of a Central Accumulation Area (CAA) or Entire Facility.
	A. ☐ Central Accumulation Area (CAA) ☐ Entire Facility
	B. Expected closure date: _____ mm/dd/yyyy
	C. Requesting new closure date: _____ mm/dd/yyyy
	D. Date closed : _____ mm/dd/yyyy ☐ 1. In compliance with the closure performance standards 40 CFR 262.17(a)(8) ☐ 2. Not in compliance with the closure performance standards 40 CFR 262.17(a)(8)

16. Notification of Hazardous Secondary Material (HSM) Activity

☐ Y ☑ N	A. Are you notifying under 40 CFR 260.42 that you will begin managing, are managing, or will stop managing hazardous secondary material under 40 CFR 260.30, 40 CFR 261.4(a)(23), (24), or (27)? If "Yes", you must fill out the Addendum to the Site Identification Form for Managing Hazardous Secondary Material.
☐ Y ☑ N	B. Are you notifying under 40 CFR 260.43(a)(4)(iii) that the product of your recycling process has levels of hazardous constituents that are not comparable to or unable to be compared to a legitimate product or intermediate but that the recycling is still legitimate? If "Yes", you may provide explanation in Comments section. You must also document that your recycling is still legitimate and maintain that documentation on site.

17. Electronic Manifest Broker

☑ Y ☐ N	Are you notifying as a person, as defined in 40 CFR 260.10, electing to use the EPA electronic manifest system to obtain, complete, and transmit an electronic manifest under a contractual relationship with a hazardous waste generator?

United States Environmental Protection Agency

HAZARDOUS WASTE PERMIT PART A FORM

1. Facility Permit Contact

First Name	**Nahid**	MI	Last Name **Toossi**
Title	**Director of Environmental Compliance**		
Email	**nahid.toossi@safety-kleen.com**		
Phone	**714-429-4355**	Ext	Fax

2. Facility Permit Contact Mailing Address

Street Address **2120 S. Yale Street**		
City, Town, or Village **Santa Ana**		
State **CA**	Country U.S.A	Zip Code 92704

3. Facility Existence Date (mm/dd/yyyy)

8/1/1978

4. Other Environmental Permits

A. Permit Type	B. Permit Number													C. Description
R	**C**	**A**	**T**	**0**	**0**	**0**	**6**	**1**	**3**	**9**	**3**	**5**		**RCRA Part B Permit**
N	**C**	**A**	**S**	**0**	**0**	**0**	**0**	**0**	**1**					**CA Storm Waste General Industrial Permit**
														WDID# 4 191001836
E	**F**	**A**	**0**	**0**	**0**	**2**	**1**	**4**	**9**					**CUPA Permit**

5. Nature of Business

Safety-Kleen is an international, service-oriented company whose customers are primarily engaged in automotive repair, industrial maintenance, and dry cleaning.

6. Process Codes and Design Capacities

Line Number		A. Process Code			B. Process Design Capacity		C. Process Total Number of Units	D. Unit Name
					(1) Amount	(2) Unit of Measure		
0	1	S	0	1	5,540	G	3	Containair Storage Areas
0	2	S	0	2	12,000	G	1	Underground Storage Tanl
0	3	X	9	9	310	G	2	R&F Unit

7. Description of Hazardous Wastes (Enter codes for Items 7.A, 7.C and 7.D(1))

Line No.		A. EPA Hazardous Waste No.				B. Estimated Annual Qty of Waste	C. Unit of Measure	D. Processes									
								(1) Process Codes									(2) Process Description (if code is not entered in 7.D1))
0	1	D	0	0	1	3,000,000	P	S	0	1	S	0	0	2			
0	2	D	0	0	4			S	0	1	S	0	0	2			Included With Above
0	3	D	0	0	5			S	0	1	S	0	0	2			Included With Above
0	4	D	0	0	6			S	0	1	S	0	0	2			Included With Above
0	5	D	0	0	7			S	0	1	S	0	0	2			Included With Above
0	6	D	0	0	8			S	0	1	S	0	0	2			Included With Above
0	7	D	0	0	9			S	0	1	S	0	0	2			Included With Above
0	8	D	0	1	0			S	0	1	S	0	0	2			Included With Above
0	9	D	0	1	1			S	0	1	S	0	0	2			Included With Above
1	0	D	0	1	8			S	0	1	S	0	0	2			Included With Above
1	1	D	0	3	9			S	0	1	S	0	0	2			Included With Above

8. Map

Attach to this application a topographical map, or other equivalent map, of the area extending to at least one mile beyond property boundaries. The map must show the outline of the facility, the location of each of its existing intake and discharge structures, each of its hazardous waste treatment, storage, or disposal facilities, and each well where it injects fluids underground. Include all spring, rivers, and other surface water bodies in this map area. See instructions for precise requirements.

9. Facility Drawing

All existing facilities must include a scale drawing of the facility. See instructions for more detail.

10. Photographs

All existing facilities must include photographs (aerial or ground-level) that clearly delineate all existing structures; existing storage, treatment, and disposal areas; and sites of future storage, treatment, or disposal areas. See instructions for more detail.

11. Comments

7. Description of Hazardous Wastes (Enter codes for Items 7.A, 7.C and 7.D (1)

Line No.		A. EPA Hazardous Waste No.				B. Estimated Annual Qty of Waste	C. Unit of Measure	D. Processes									
								(1) Process Codes									(2) Process Description (if code is not entered in 7.D1))
1	2	D	0	4	0			S	0	1	S	0	0	2			Included with Above

California Waste Codes Number (quantities are included with above):

133, 134, 135, 213

12. Eligible Academic Entities with Laboratories—Notification for opting into or withdrawing from managing laboratory hazardous wastes pursuant to 40 CFR 262 Subpart K.

☐ Y ☑ N	A. Opting into or currently operating under 40 CFR 262 Subpart K for the management of hazardous wastes in laboratories—If "Yes", mark all that apply. Note: See the item-by-item instructions for definitions of types of eligible academic entities.
☐	1. College or University
☐	2. Teaching Hospital that is owned by or has a formal written affiliation with a college or university
☐	3. Non-profit Institute that is owned by or has a formal written affiliation with a college or univer-
☐ Y ☑ N	B. Withdrawing from 40 CFR 262 Subpart K for the management of hazardous wastes in laboratories.

13. Episodic Generation

☐ Y ☑ N	Are you an SQG or VSQG generating hazardous waste from a planned or unplanned episodic event, lasting no more than 60 days, that moves you to a higher generator category. If "Yes", you must fill out the Addendum for Episodic Generator.

14. LQG Consolidation of VSQG Hazardous Waste

☐ Y ☑ N	Are you an LQG notifying of consolidating VSQG Hazardous Waste Under the Control of the Same Person pursuant to 40 CFR 262.17(f)? If "Yes", you must fill out the Addendum for LQG Consolidation of VSQGs hazardous waste.

15. Notification of LQG Site Closure for a Central Accumulation Area (CAA) (optional) OR Entire Facility (required)

☐ Y ☑ N	LQG Site Closure of a Central Accumulation Area (CAA) or Entire Facility.
	A. ☐ Central Accumulation Area (CAA) ☐ Entire Facility
	B. Expected closure date: _____ mm/dd/yyyy
	C. Requesting new closure date: _____ mm/dd/yyyy
	D. Date closed : _____ mm/dd/yyyy ☐ 1. In compliance with the closure performance standards 40 CFR 262.17(a)(8) ☐ 2. Not in compliance with the closure performance standards 40 CFR 262.17(a)(8)

16. Notification of Hazardous Secondary Material (HSM) Activity

☐ Y ☑ N	A. Are you notifying under 40 CFR 260.42 that you will begin managing, are managing, or will stop managing hazardous secondary material under 40 CFR 260.30, 40 CFR 261.4(a)(23), (24), or (27)? If "Yes", you must fill out the Addendum to the Site Identification Form for Managing Hazardous Secondary Material.
☐ Y ☑ N	B. Are you notifying under 40 CFR 260.43(a)(4)(iii) that the product of your recycling process has levels of hazardous constituents that are not comparable to or unable to be compared to a legitimate product or intermediate but that the recycling is still legitimate? If "Yes", you may provide explanation in Comments section. You must also document that your recycling is still legitimate and maintain that documentation on site.

17. Electronic Manifest Broker

☑ Y ☐ N	Are you notifying as a person, as defined in 40 CFR 260.10, electing to use the EPA electronic manifest system to obtain, complete, and transmit an electronic manifest under a contractual relationship with a hazardous waste generator?

18. Comments (include item number for each comment)

19. Certification I certify under penalty of law that this document and all attachments were prepared under my direction or supervision in accordance with a system designed to assure that qualified personnel properly gather and evaluate the information submitted. Based on my inquiry of the person or persons who manage the system, or those persons directly responsible for gathering the information, the information submitted is, to the best of my knowledge and belief, true, accurate, and complete. I am aware that there are significant penalties for submitting false information, including the possibility of fines and imprisonment for knowing violations. **Note:** For the RCRA Hazardous Waste Part A permit Application, all owners and operators must sign (see 40 CFR 270.10(b) and 270.11).

Signature of legal owner, operator or authorized representative	Date (mm/dd/yyyy)
Mori Soronson	9/27/19
Printed Name (First, Middle Initial Last)	Title
Mori Soronson	Environmental Compliance Director
Email	
mori.sorenson@safety-kleen.com	

Signature of legal owner, operator or authorized representative	Date (mm/dd/yyyy)
Printed Name (First, Middle Initial Last)	Title
Email	

FIGURE I-1
SITE LOCATION MAP

SITE LOCATION MAP

SAFETY KLEEN LOS ANGLES
2918 WORTHEN AVE

FIGURE 1-1

FIGURE I-2
TOPO MAP (1-200 FEET SCALE)

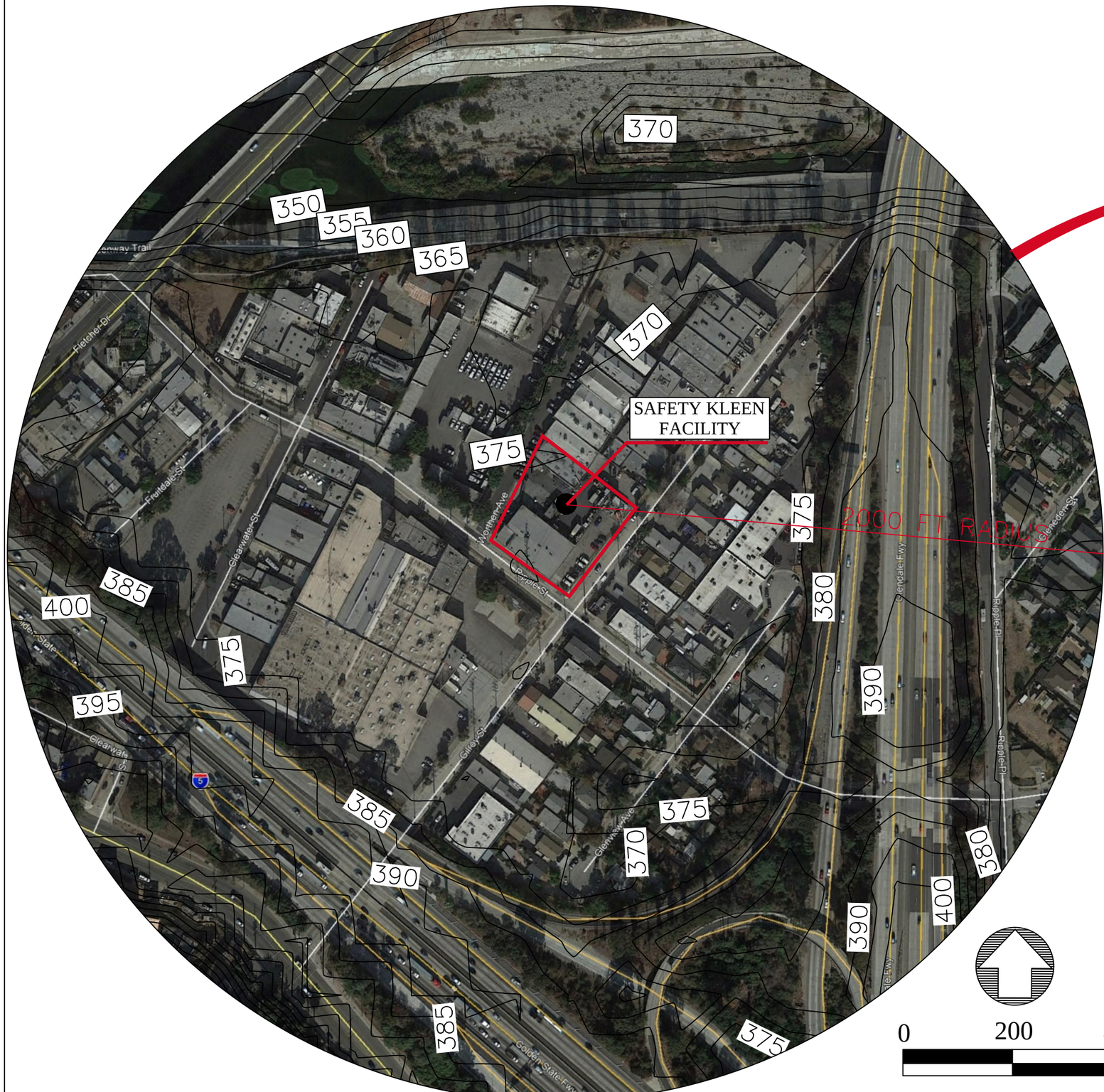

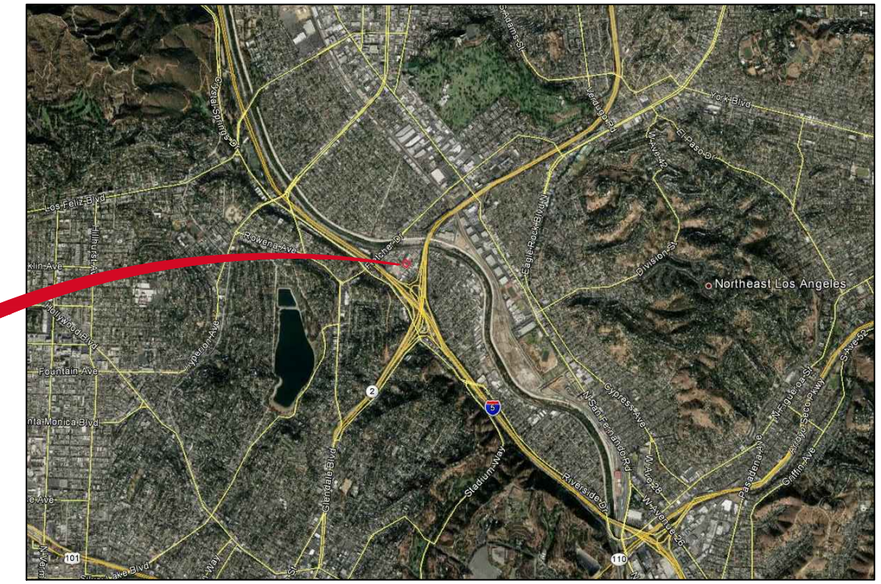

AERIAL PHOTOGRAPH SHOWING THE LOCATION OF THE FACILITY

NOTES:
1. ALL DATUM SHOWN BASED ON USGS NAVD 1988
2. SUBJECT PROPERTY IS WITHIN FEMA ZONE "X"
3. THERE ARE NO RECREATION AREAS, RUNOFF CONTROL SYSTEMS, INTERNAL ROADS, STORM, SANITARY AND PROCESS SEWER SYSTEMS OR FIRE CONTROL FACILITIES ON THIS SITE
4. THERE ARE NO BARRIERS FOR DRAINAGE OR FLOOD CONTROL ON THIS SITE.

Figure I-3
1-200 Topo Map

TOPOGRAPHIC MAP OF SAFETY-KLEEN LOS ANGELES, CA STORAGE FACILITY

SCALE: 1 inch = 200 feet

ACAD-Los Angeles-CA.dwg, Jul 18, 2018, 12:46pm

FIGURE I-3

TOPO MAO (1-MILE RADIUS)

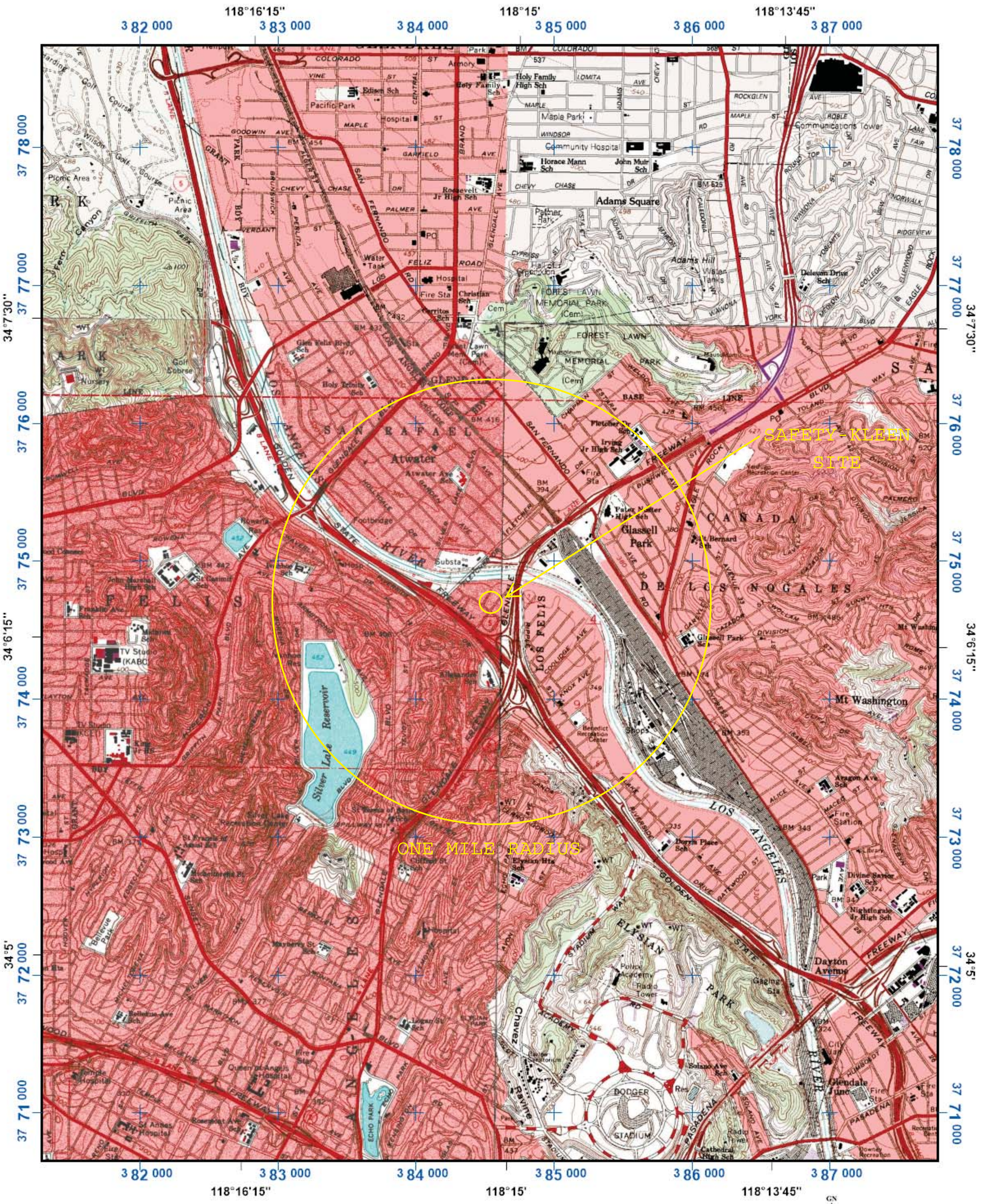

1:35000 scale

Universal Transverse Mercator (UTM) Projection Zone 11
North American Datum of 1983
1000 meter UTM / USNG / MGRS
Grid Zone Designation: 11S
100,000-m Squares:LT

0.25 0.5 0.75 1 1.25 1.5 1.75 2 Miles

0 0.25 0.5 0.75 1 1.25 1.5 1.75 2 Kilometers

Magnetic declination of 13E at center of map on March 17, 2011

FiGure I-3
Topo Map
1-mile Radius

FIGURE I-4
SITE PLAN

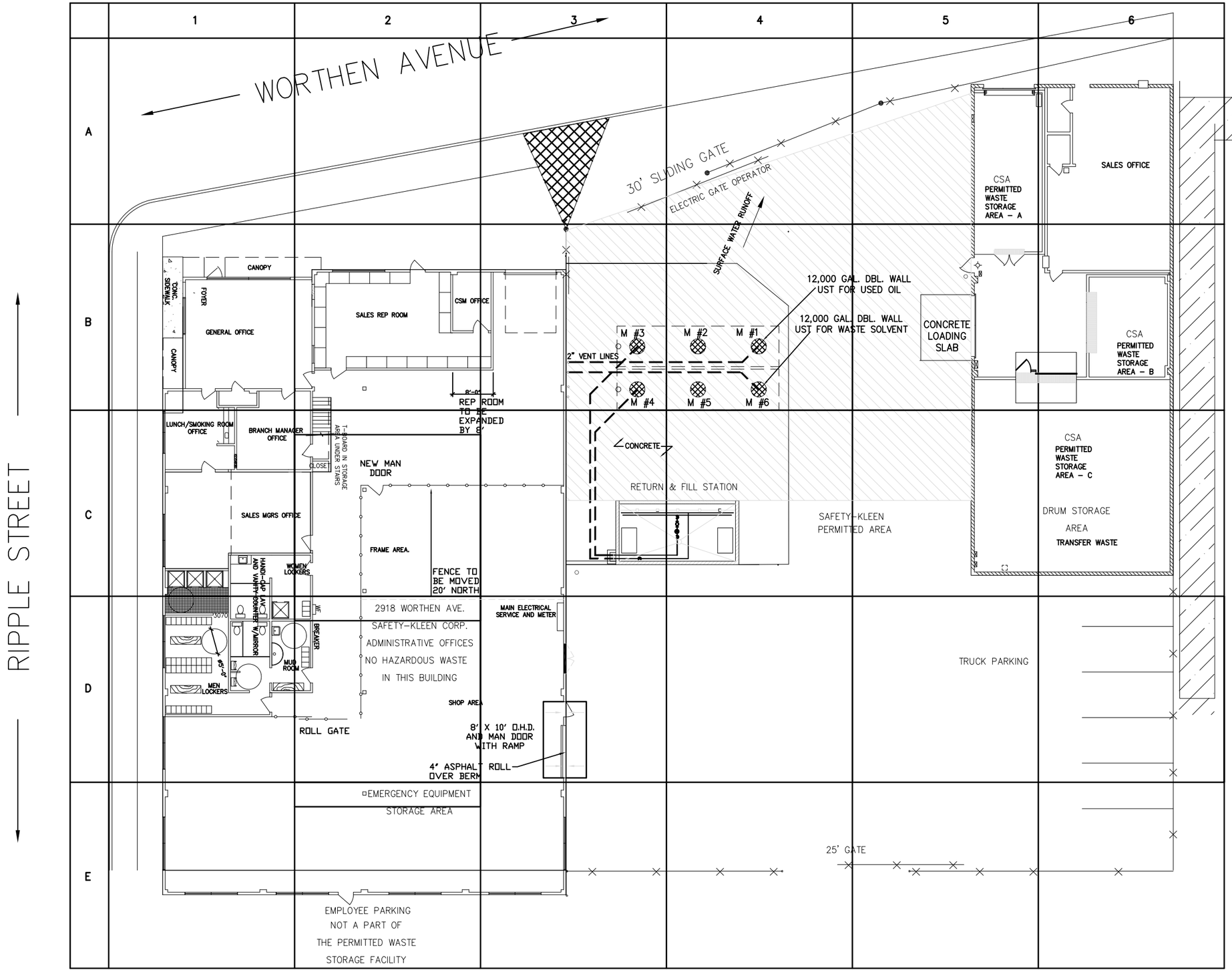

MANWAY SCHEDULE
M 1 : FILL PIPE AND VENT LINE SEE SK STD 1011-01 DETAIL D
M 2: ACCESS MANWAY
M 3: CLEAN SOLVENT PUMP AND HLA SK STD 1011-01 DETAIL A
M 4: WASTE SOLVENT DRAIN LINE SEE STD 1010-01 DETAIL C
M 5: ACCESS MANWAY SEE SK STD 1010-01 DETAIL B
M 6: FILL PIPE AND VENT LINE SEE SK STD 1011-01 DETAIL D

FIGURE 1-4

NO.	DESCRIPTION	BY	CHK	APPR	DATE
12	REVISED FOR PERMIT	JEK	NT	NT	041318
11	REVISE TO SHOW CURRENT CONDITIONS	JEK	GM	GM	061715
10	REVISE TO SHOW CURRENT CONDITIONS	JEK	NT	NT	041115
09	ADD PROPOSED IMPROVEMENTS	JEK	SL	SL	110509
08	REVISE FENCE LOCATION	JEK	NT	NT	091609
07	REVISE NOTES/ EQP. LOCATIONS	JEK	NT	NT	061708
06	REVISE NOTES/ EQP. LOCATIONS	JEK	NT	NT	052808
05	REVISE TO SHOW CURRENT CONDITIONS	JEK	MC	MC	021408
04	ADD OUTDOOR CONTAINMENT AREAS	JEK	SL	SL	071807
03	REVISE TO SHOW CURRENT CONDITIONS	JEK	KP	KP	121406
02	REVISE TO SHOW CURRENT CONDITIONS	JEK	RG	NT	030206

REVISIONS

PROPRIETARY STATEMENT

THIS DRAWING IS THE EXCLUSIVE PROPERTY OF SAFETY-KLEEN SYSTEMS, INC. AND IS PROPRIETARY AND CONFIDENTIAL INFORMATION. THIS DRAWING AND THE INFORMATION CONTAINED THEREIN MUST NOT BE DUPLICATED, USED, DIVULGED, REPRODUCED, COPIED, DISCLOSED OR APPROPRIATED IN WHOLE OR IN PART FOR ANY PURPOSE OTHER THAT AS EXPRESSLY AUTHORIZED BY SAFETY-KLEEN SYSTEMS, INC. THIS DRAWING MUST BE RETURNED PROMPTLY UPON REQUEST.

TITLE

SITE PLAN
2918 WORTHEN AVE

SAFETY-KLEEN SYSTEMS, INC.
2600 N. CENT. EXPRESSWAY STE 400 RICHARDSON, TX. 75080
PHONE 800-669-5740

SCALE	BY	CHKD	P.E. APPR	OP. APPR	DATE
1"=20'	WEY	-	-	-	2-2-96

SERVICE CENTER BRANCH AT	STD-DWG-REV NO.
LOS ANGELES, CA	7116-SP00-001

APPENDIX I-2

Safety-Kleen Closed Loop System
(Handling Process for Spent Mineral Spirits)

Unit Process for the Handling of Spent Parts Washer Solvent

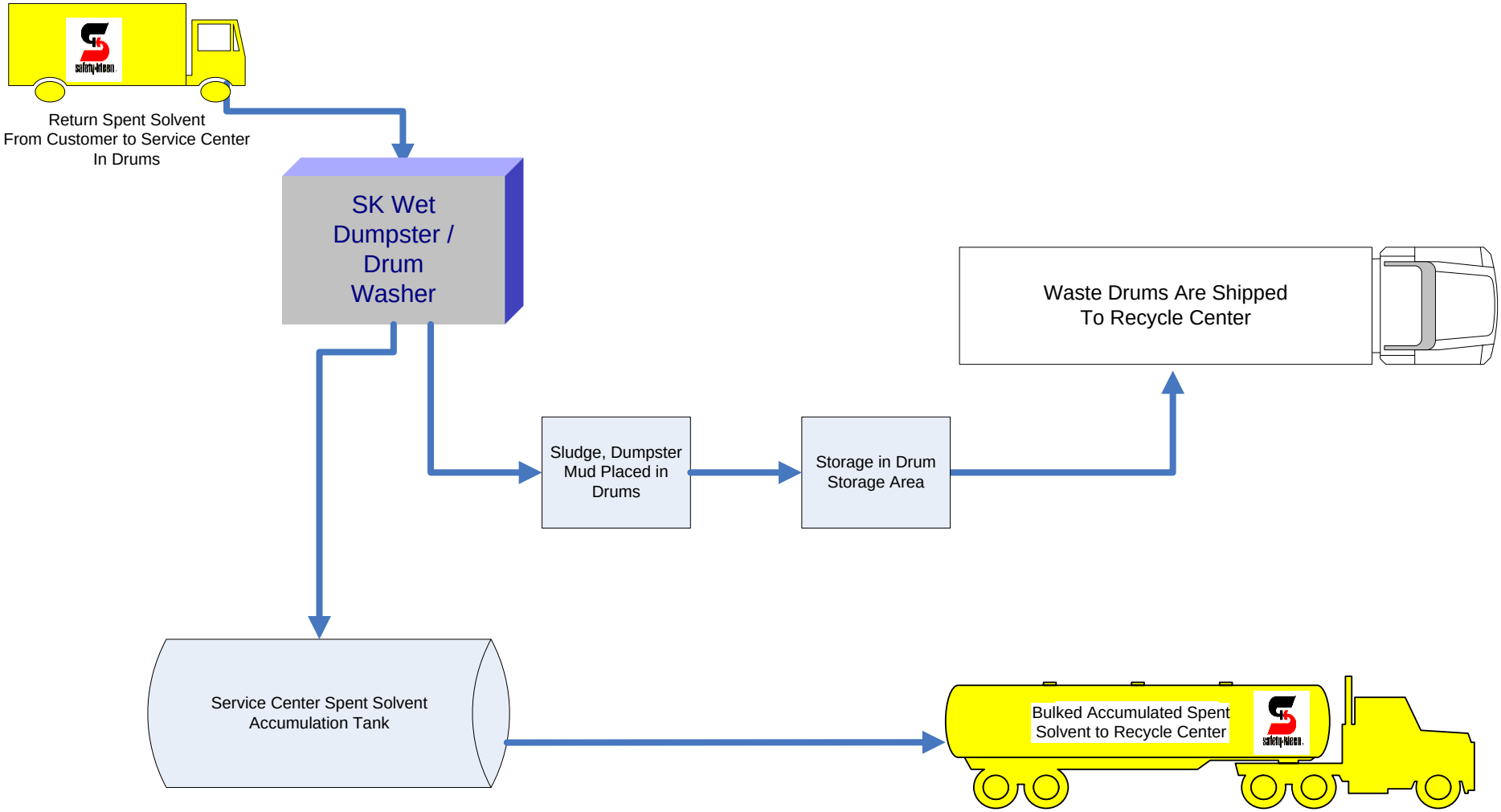

Safety-Kleen Solvent Use & Regeneration Loop

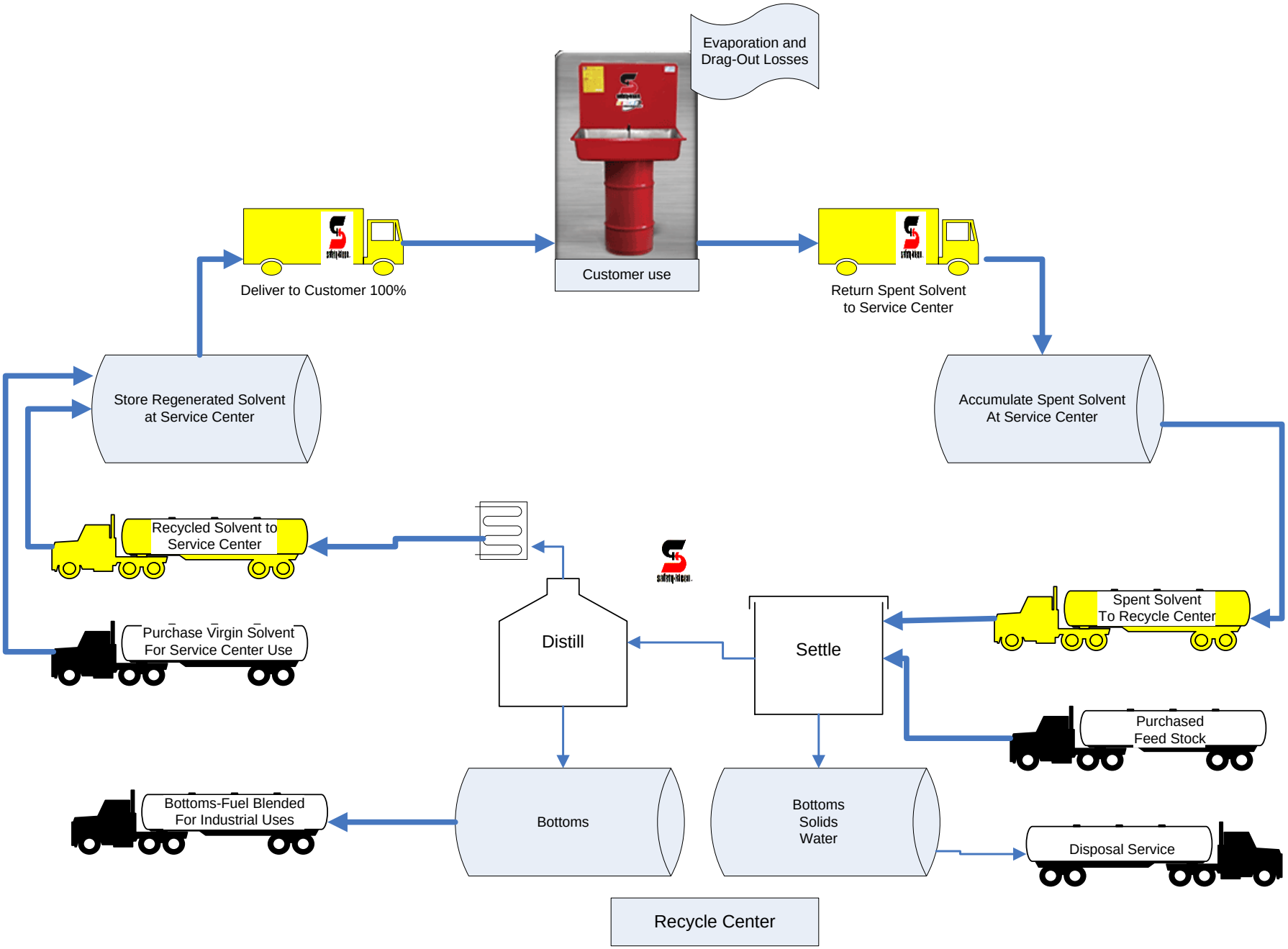

APPENDIX I-3

Property Deed and Legal Description

RECORDING REQUESTED BY
First American Title Company LA

AND WHEN RECORDED MAIL THIS DEED AND, UNLESS OTHERWISE SHOWN BELOW, MAIL TAX STATEMENTS TO:

Name: Mr. Brent Amato, Esq.
Street Address: Safety Kleen Corp.
1000 N. Randall Road
City State Zip: Elgin, IL 60123-7857

93-1975161

RECORDED/FILED IN OFFICIAL RECORDS
RECORDER'S OFFICE
LOS ANGELES COUNTY
CALIFORNIA
1 MIN. PAST 3 P.M. OCT 8 1993

Title Order No. 9242944-60 Escrow No. 935162MN

SPACE ABOVE THIS LINE FOR RECORDER'S USE

FEE $5

APN 5437-029-014
5437-029-015
5437-029-016

ADMINISTRATOR'S GRANT DEED

THE UNDERSIGNED GRANTOR(S) DECLARE(S)
DOCUMENTARY TRANSFER TAX is $ 220.00 L.A. County 80; $900.00 L.A. City (44)
XXXXComputed on full value of property conveyed, or
☐ Computed on full value less value of liens or encumbrances remaining at time of sale, and

FOR A VALUABLE CONSIDERATION, receipt of which is hereby acknowledged,
Peter V. Misunas, Administrator of the Estate of Edward Joseph Plowman

hereby GRANT(S) to
Safety-Kleen Corp., a Wisconsin Corporation

the following described real property in the City of Los Angeles
County of Los Angeles State of California:

Lots 136, 137 and 138 of Tract 5892, as per map recorded in Book 62 page 22 of Maps, in the Office of the County Recorder of said County.

It is the intent of the parties hereto to terminate that certain unrecorded lease between Grantor as Lessor and Grantee as Lessee affecting the subject property.

Dated September 16, 1993

Peter V. Misunas, Administrator

STATE OF CALIFORNIA
COUNTY OF LOS ANGELES } ss.

On SEPT. 21, 1993 before me,
MARY L. DENTY,
personally appeared PETER V. MISUNAS,

personally known to me (or proved to me on the basis of satisfactory evidence) to be the person(s) whose name(s) is/are subscribed to the within instrument and acknowledged to me that he/she/they executed the same in his/her/their authorized capacity(ies), and that by his/her/their signature(s) on the instrument the person(s) or the entity upon behalf of which the person(s) acted, executed the instrument.

WITNESS my hand and official seal.
Signature Mary L. Denty

MARY L. DENTY
Comm. #953895
NOTARY PUBLIC - CALIFORNIA
LOS ANGELES COUNTY
My Comm. Expires Jan. 28, 1996

(This area for official notarial seal)

MAIL TAX STATEMENTS TO PARTY SHOWN ON FOLLOWING LINE; IF NO PARTY SO SHOWN, MAIL AS DIRECTED ABOVE

Tax Dept. Safety-Kleen Corp. 1000 N. Randall Road; Elgin Il 60123-7857

Name Street Address City & State

FATCOLA 72 (9/91)

Parcels 136, 137, 138

This lease is made by and between EDWARD J. PLOWMAN, hereinafter referred to as "Lessor", and SAFETY-KLEEN CORP., hereinafter referred to as "Lessee", according to the following terms, covenants, and conditions:

1. The property leased by Lessor to Lessee hereunder is that certain real property commonly known as 2910, 2914, and 2918 Worthen Avenue, City of Los Angeles, County of Los Angeles, State of California, consisting of approximately 12,000 square feet of land with a block building of approximately 4,000 square feet upon it.

2. The term of this lease shall run from August 1, 1988 for a period of five years ending July 31, 1993.

3. Lessee agrees to pay Two Hundred Fifty-Two Thousand Dollars for the use and rent of the Property for Term hereof, payable in advance at the rate of Four Thousand Two Hundred Dollars on August 1, 1988 and the first day of each month thereafter. Payment shall be made to Lessor at his office, located at 732 Sonora Avenue, Glendale, California 91201, or as hereafter designated by him. Lessor shall have the right to increase the amount of the lease by five percent per year on August 1 of each year during the term hereof.

4. Lessee shall use the property only as a service center, warehouse, and storage facility. Any storage of solvents, chemicals, or hazardous materials shall be in tanks or containers approved for such use by the appropriate agency of the City and County of Los Angeles. Lessee shall not store anything classified now or hereafter as toxic materials, without proper clearance and authorization from ~~Lessor and~~ applicable regulatory agencies.

5. Lessee shall take good care of the premises and keep them in good repair, and a clean, sanitary, and habitable condition, free from filth, danger of fire, or any nuisance. Upon the termination of this lease Lessee shall return the property in as good a condition as originally found by him, reasonable wear and tear excepted. The underground tanks which were allowed to be installed under the prior lease between the parties shall be properly removed or filled with sand, in a neat and workmanlike manner and in compliance with all applicable ordinances. comply with all applicable federal, state and local law.

6. Upon the termination of this lease, Lessee shall clean up all hazardous waste, remove any tanks, and otherwise ~~return the property to a clean, sanitary, and habitable condition.~~ Lessee agrees to indemnify Lessor from any claims or expenses related to the use or condition of the property due to Lessee's specific use thereof, or its cleanup to satisfy applicable regulatory criteria.

7. Lessee shall not sublet the property or allow any other tenant to come in with or under him, nor shall he assign this lease or any part thereof by his act, consent, non-action,

Parcel 129

This Document amends the Lease undated by and between Lucille B. Conroy, as Lessor, and Safety-Kleen Corp., as Lessee, for a certain parcel of land fronting on Gilroy Street, Los Angeles, California. The parties agree as follows:

1. The term of said Lease is extended for an additional period of five (5) years and will, therefore, now expire on July 31, 1993.

2. The monthly rental shall be $350.00 per month commencing August 1, 1988 and ending July 31, 1993.

3. Lessee shall have the option to terminate the Lease by giving the Lessor six (6) months prior written notice of its intention to terminate said Lease.

All terms and conditions not inconsistent with the foregoing shall remain in full force and effect.

In witness whereof, the parties hereto have caused this instrument to be duly executed on the day and year first written above.

LESSOR:

Lucille B. Conroy

LESSEE: 6/24/88

Safety-Kleen Corp.

By: Donald Brinckman, President

APPENDIX I-4

DTSC's Acknowledgement of RFI Completion and Well abandonment Documentation

(May 29, 2009 letter from Department of Toxic Substances Control (DTSC) acknowledging completion of the RCRA Facility Investigation (RFI), and documentation of well abandonment activities in October 2009)

Department of Toxic Substances Control

Linda S. Adams
Secretary for
Environmental Protection

Maziar Movassaghi
Acting Director
8800 Cal Center Drive
Sacramento, California 95826-3200

Arnold Schwarzenegger
Governor

May 29, 2009

RECEIVED
6/5/09

Mr. Brian Culnan
Senior Remediation Manager
Safety-Kleen Corporation
1050 North Third Street, Suite "M"
Laramie, Wyoming 82072

ACKNOWLEDGMENT OF NO FURTHER ACTION, SAFETY-KLEEN SYSTEMS, INC., 2918 WORTHEN AVENUE, LOS ANGELES, CALIFORNIA, 90039-2829, ENVIRONMENTAL PROTECTION AGENCY ID NUMBER CAT000613935

Dear Mr. Culnan:

The Department of Toxic Substances Control (DTSC) has reviewed the corrective action status of the Safety-Kleen Systems, Inc. (Safety-Kleen) facility located at 2918 Worthen Avenue in Los Angeles. DTSC reviewed the Resource Conservation and Recovery Act (RCRA) Facility Assessment (RFA) and a letter from the Los Angeles Region of the California Regional Water Quality Control Board (LARWQCB) dated April 18, 2000.

The RFA concluded that documented releases had occurred to soils and recommended that a RCRA Facility Investigation (RFI) be conducted to identify and evaluate releases of hazardous wastes or constituents. DTSC confirmed that the LARWQCB took the lead overseeing corrective action at the facility in the late 1990s. After reviewing the investigation reports, the LARWQCB concluded in a letter dated April 18, 2000, that no further assessment or cleanup was necessary.

Based on this information, DTSC hereby acknowledges that no further action is required for corrective action recommended in the suggestions for further action (Section 8.0) of the RFA. This acknowledgment does not limit or otherwise preclude DTSC from taking enforcement action pursuant to Health and Safety Code, Section 25187, or other available legal authorities, should DTSC determine that such actions are warranted. This acknowledgment does not relieve Safety-Kleen of its obligations to comply with RCRA or any other applicable local, state, or federal laws and regulations.

WL, al
WL04W.059

Printed on Recycled Paper

Please contact me at (916) 255-3883 or wlorentz@dtsc.ca.gov if you have any questions concerning this letter.

Sincerely,

Wayne Lorentzen
Hazardous Substances Engineer
Legacy Landfills and Corrective Action Office

cc: Mr. Rizgar Ghazi, P.E.
Supervising Hazardous Substances Engineer
Legacy Landfills and Corrective Action Office
Department of Toxic Substances Control
rghazi@dtsc.ca.gov

WL, al
WL04W.059

APPENDIX I-5

Owner and Operator Certification

Safety-Kleen Systems, Inc., Los Angeles, California

The undersigned, being an authorized representative of Safety-Kleen Inc., the permit applicant, certifies under penalty of law that this document and all attachments were prepared under my direction or supervision in accordance with a system designed to assure that qualified personnel properly gather and evaluate the information submitted. Based on my inquiry of the person or persons who manage the system, or those persons directly responsible for gathering the information, the information submitted is, to the best of my knowledge and belief, true, accurate, and complete. I am aware that there are significant penalties for submitting false information, including the possibility of fine and imprisonment for knowing violations.

_____ _____

Mori Sorenson
Director, Environmental Compliance
Safety-Kleen Systems, Inc.

Date

APPENDIX I-6

Environmental Permits

1. Local City or County Land Use Zoning or Permit

Figure II-4 presents a zoning map, which includes the site occupied by the Safety-Kleen Los Angeles Branch. The site is zoned M, which allows for general commercial and light industrial use. No conditional land use permit was deemed necessary.

2. Air Permits

There are no air permits issued by regional or local air districts at this facility. The South Coast Air Quality Management District's (SQAQMD's) letter dated June 3, 1993 clarifying exemption of underground storage tanks from having written permits is attached.

If petroleum-based solvents will be stored in tanks, application for permitting the drum washer units in the Return and Fill Area will be submitted to the SCAQMD.

3. Waste Water Discharges Permit

There are no hazardous waste discharges from the facility. All waste management areas are contained and therefore no surface runoff within these areas exists.

4. Storm Water Discharges Permit

The facility is covered under the State of California General Permit for storm water discharges associated with industrial activities (Order NPDES No. CAS000001, WDID# 4 19I001836).

5. Certified Unified Program Agency (CUPA) Permit

The Los Angeles Fire Department serves as the Certified Unified Program Agency (CUPA) and oversees operation on hazardous materials, hazardous wastes generation, and underground storage tanks at the facility. The facility ID is FA0002149.

6. Other Permits Related to Hazardous Waste Storage

None.

APPENDIX I-7

Waste Minimization Certification

Safety-Kleen Systems, Inc
Los Angeles Service Center.
2918 Worthen Avenue
Los Angeles, California 90039

EPA Number: CAT000613935

I hereby certify under penalty of law that personnel under my direction and supervision at this facility are undertaking specific steps in accordance with a program in place to minimize the amount and toxicity of hazardous wastes generated at this facility to a degree economically practicable and that the method utilized for the treatment, storage, or disposal of hazardous wastes is the practicable method currently available to this facility which minimizes the present and future threat to human health and the environment. I am aware that there are significant penalties for false certification, including the possibility of fine and imprisonment.

Branch General Manager signs once a year.

APPENDIX I-8

Photographs

SAFETY_KLEEN SYSTEMS, INC.

DSA A

DSA B

DSA B

DSA C

R&F AREA

BACK OF R&F AREA

CAUTION
DANGER
NO SMOKING
PELIGRO
NO FUMAR
NOTICE
800-669-5740
NON-REUSABLE CONTAINER

R&F AREA

DRUM
WASHER
UNIT

DRUNM WASHER

PART II

FACILITY LOCATION

II. FACILITY LOCATION

A. Detailed Topographic Map Including:

Figure I-1 shows site location Map. Figure I-2 is a topographic map (1 inch =200 feet scale) showing the facility location and surrounding vicinity. Figure I-3 is a 7.5-minute (1 inch =2000 feet scale) USGS topographic map showing the facility location, a 2000-foot, and a 1-mile radius around the facility. These maps show features required in this section.

1. Map layout, showing:
(22 CCR 66260.14(b)(18))
(40 CFR 270.14(b)(19))

a. Scale

Figure I-2: Scale is 1 inch = 200 feet
Figure I-3: Scale is 1 inch = 2000 feet

b. North arrow

Figure I-2: Located at base of map
Figure I-3: located at lower right corner of map

c. Date of Map

Figure 1-1, I-2, and I-3: Edited in 2018

d. Property boundaries plus 2000 feet - Shown on Figure 1-1.

e. Location of facility

1. Latitude - 34°, 06', 25" north

2. Longitude - 118°, 15', 07" west

3. Township – T1 south

4. Range – R13 west

5. Section(s) - 4

6. Principal Meridian – San Bernardino Baseline Meridian

7. **Assessor's Parcel Number(s) -** The Los Angeles County Assessor's Parcel Number (APN) for the property is tract number 5892- lots 129, 136, 137 and 138. An Assessor's map showing the property is included as Figure II-1.

8. **Location of each Solid Waste Management Unit (22 CR 66270.14(d)(1) (40 CFR 270.149(d)(1)(i))**

Refer to Site Plan Figure I-4.

a. **Treatment –** Treatment is conducted at the R&F station. A Return and Fill area with two drum washers is located east of the administrative offices near the two 12,000-gallon underground storage tank (UST). Each of the drum washer units separates extraneous solids from the used parts washer solvent waste stream prior to storage in the waste UST. Each unit has screens, which are intended to remove extraneous solids, such as nuts, bolts, rags, sediment, etc., to protect pumps in the tank system. The drum washer units are ancillary equipment for the 12,000-gallon UST. In accordance with California Health & Safety Code Section 25123, the physical separation in these units is not considered treatment.

b. **Storage --** The location of hazardous waste storage units is provided on the site plan (Figure I-4). The facility has two 12,000-gallon USTs. One UST is used for storage of product, and the other stores spent parts washer solvent (mineral spirits or aqueous parts washer). The facility also has three Drum Storage Areas (Units A, B, and C) for storage of containerized parts washer solvents before being emptied in the waste UST. Storage units have properly-designed secondary containment systems and are discussed in more detail in Part IV (Facility Design). Another warehouse is also on site for storage of 10-day transfer wastes.

c. **Disposal --** Safety-Kleen does not have any hazardous waste disposal units at this facility.

9. **Injections and Withdrawal Wells (on- and off-site) -** Safety-Kleen does not have any injection or withdrawal wells, either on or off this facility.

2. Land characteristics, showing:

a. Existing contours and elevations
(22 CCR 66270.14(b)(18))
(40 CFR 270.14(b)(19))

The detailed topographic map (Figure I-3) has a 10-foot contour interval. The land occupied by the Service Center is essentially a flat plane about 50 feet, with a maximum difference in surface elevations being less than one foot.

b. Proposed final contours and elevations
(22 CCR 66270.14(b)(18) and (19))
(40 CFR 270.14(b)(19))

The Safety-Kleen Service Center is an existing facility. No major modifications of the facility are anticipated that would significantly affect the land characteristics on the property.

c. Appropriate contour intervals to show:
(22 CCR 66270.14(b)(18))
(40 CFR 270.14(b)(19))

1. **Surface water flow patterns -** Generally, surface water from the site drains through concrete line swales to a gutter on Worthern Avenue in a northern direction.

2. **Facility topographic profiles -** Shown on Figures I-2 and I-3.

d. 100-year floodplain
(22 CCR 66270.14(b)(11)(8), 66270.14(b)(18)(8))

Floodplain information is provided in Figure II-2, and is also discussed in more detail in Section F of Part II (Relationship of the Facility to the 100-year Floodplain). The facility is located in the section of the City of Los Angeles designated as zone C (M2-1). This zone is classified as an area of minimal flooding.

e. Surface waters including intermittent streams

(22 CCR 66270.14(b)(18)(C))
(40 CFR 270.14(b)(19)(iii))

There are no surface water bodies on site. The Los Angeles River, Silver Lake and Rowana Reservoirs are in the site vicinity (see Figure I-3).

f. Prevailing wind speed and direction
(22 CCR 66270.14(b)(18)(E))
(40 CFR 270.14(b)(19)(v))

A wind rose from the diagram based on data collected at the Glendale Station by the South Coast Air Quality Management District has been provided in Figure II-3. The prevailing wind speed is between 4 and 9 knots. The prevailing wind direction is southeast. The Long Beach Airport is located approximately 15 miles northwest of the facility.

g. Land uses and zoning
(22 CCR 66270.14(b)(18)(D))
(40 CFR 270.14(b)(19)(iv))

The Safety-Kleen facility is located in zone M2-1, which is light industrial (see Figure II-4).

3. Facility Characteristics showing

a. Legal boundaries
(22 CCR 66270.14(b)(18)(G))
(40 CFR 270.14(b)(19)(vii))

The legal boundaries for the property are shown on Figures I-3 (USGS Topographic Map), and I-4 (Site Plan).

b. Permanent access roads
(22 CCR 66270.14(b)(18)(J)
(40 CFR 270.14(b)(19)(x)

Traffic approaches the facility mainly from Ripple Street and Warthen Avenue (Figure II-5).

c. Permanent internal roads
(22 CCR 66270.14(b)(18)(J))
(40 CFR 270.14(b)(19)(x))

Due to the limited size of the facility, there are no internal roads within the facility.

d. On and off-site traffic:
(22 CCR 66270.14(b)(10))
(40 CFR 270.14(b)(10))

1. **Estimated volume, types of vehicles, and quantity of waste per movement of vehicle -** The Safety-Kleen Service Center has approximately 20 employees who commute daily (Monday through Friday) to this facility. The service center currently operates approximately 12 route trucks to its customers. Most of the route trucks are loaded with clean solvent or other products and dispatched daily between 7:00 a.m. and 8:30 a.m. The route trucks usually return between 4:00 p.m. and 6:00 p.m. to unload the wastes. The route trucks are single-axle with dual wheels and range from 3 to 7 tons in maximum gross weight.

   Trucks are dispatched from the recycle/treatment center to the facility once or twice a week, or on an as-needed basis, to deliver the solvent product and to collect the used solvent. Additionally, trucks deliver containerized wastes from various Safety-Kleen facilities to the Los Angeles facility. These containerized wastes are collected from the facility about three times per week and delivered to an appropriate facility for recycling or treatment.

   In compliance with California vehicle size and weight limitations, the larger trucks have a maximum gross weight of 80,000 pounds with tandem axle weight less than 34,000 pounds.

2. **Patterns, including information regarding waste transfer and pickup stations –** The San Diego freeway (Interstate Hwy. 5) is the major transportation artery in the region. Traffic approaches the facility mainly from Fletcher Boulevard and Ripple Street. On-site traffic primarily involves loading and unloading activities performed between the Return/Fill area and warehouse.

3. **Control methods -** The area surrounding the facility is zoned for light industrial use. Traffic control methods (stop signs and traffic lights) are already in place to handle the traffic volume from Safety-Kleen operations.

4. **Control signals-** Traffic signals are currently located at the intersection of Fletcher Boulevard and Ripple Street to control traffic flow. There are no traffic control devices within the facility.

5. **Type of surface and load bearing capacity -** All freeways and access roads are public streets, which are designed and constructed to serve an industrial subdivision. Roads in a light industrial area are generally designed with a minimum of 8 inches of asphalted concrete with 6 inches of granular base.

e. Security fencing
(22 CCR 66264.14(b)(2), 66270.14(b)(4), (b)(18)(H))
(40 CFR 264.14(b)(2), 270.14(b)(4), (b)(19)(viii))

1. **Locations -** Security fencing is located around the hazardous management area and facility exterior, as shown on Figure I-4.

2. **Types -** Security fencing consists of a 6-foot-high chain-link fence with three strands of barbed wire at the top.

f. Access control
(22 CCR 66264.14, 66270.14(b)(4), (b)(18)(H), (b)(18)(J))
(40 CFR 264.14, 270.14(b)(4), (b)(19)(viii), (b)(19)(x))

1. **Locations -** Access control is provided by the administrative office door and a security gate and fencing, as shown on Figure I-4.

2. **Types -** The waste management area, including the container storage area, Return/Fill area, and the underground storage tanks areas, are secured with a 6-foot high, chain-link fence with 2-foot of rolled or flat strands of barbed wire. Access to facility is limited to one security gate, which is kept locked, except to allow vehicles to enter and leave.

g. Names, locations, and dimensions of past, present, and future:
(22 CCR 66270.14(b)(18)(1)-(L), (b)(19))
(40 CFR 270.14(b)(18)(ix)-(xii))

1. **Treatment facilities –** Treatment is conducted in the R&F Unit.

2. **Storage facilities** –The facility has one nominal 12,000-gallon UST for storage of spent parts washer solvent (mineral spirits or aqueous). Only one waste material (i.e. spent mineral spirit solvent or spent aqueous solvent) will place into the UST at one time. The tank will be cleaned prior to the changing to another waste material. Parts washer solvent is added to the UST through the two drum washers. A screen within each drum washer prevents large solids from entering the UST. Used solvent sediment is regularly removed from the drum washers and placed in containers for final shipment to the Recycle Center. The facility also has three container storage areas used for storage of containerized wastes.

   Used parts washer solvent (including, but not limited to, Safety-Kleen Premium Solvent, and Aqueous), spent immersion cleaner, dry cleaning wastes (perchloroethylene), spent antifreeze/glycols, paint wastes/lacquer thinners, waste oil, spent photochemical waste, transfer wastes, and Safety-Kleen generated wastes are stored in containers in the container storage areas. The amount of each type of hazardous waste stored varies depending on the facility's mode of operation. Specific information relating to the facility's hazardous waste container storage unit is provided in Part IV.

3. **Disposal facilities -** There are no hazardous waste disposal units at this facility.

4. **Loading and unloading and other transfer facilities -** The locations of the underground waste storage tanks and the Return/Fill dock area are shown on Figure I-4. The used parts washer solvent containers are usually unloaded directly onto the Return/Fill dock. An unloading/loading area is provided for containers placed into the container management areas. Design information is included in Part IV of the operation plan. Parts IV and VIII of the operation plan contain detailed information on operating procedures for these areas.

5. **Locations and identities of containers or tanks holding ignitable, reactive, or incompatible wastes -** The used

parts washer solvent (aqueous or mineral spirits) is stored in one nominal 12,000-gallon underground waste storage tank, as shown on Figure I-4. Parts washer solvents are not ignitable. All ignitable wastes in containers are managed on a 10-day transfer basis, and in accordance with Title 22 of the California Code of Regulations section 66264.176, and are stored within the container storage areas shown on Figure I-4. No reactive or incompatible wastes are stored at the facility.

6. **Equipment and container decontamination areas -** Used parts washer solvent, and RCRA-empty containers will be cleaned in the Return and Fill area.

7. **Buildings –** Safety-Kleen has a warehouse building at the site as shown on Figure 1-3. In addition to the container management areas, this building contains administrative offices.

8. **Barriers for drainage and flood control, and other containment structures -** Safety-Kleen has designed containment structures for the solvent Return/Fill area as well as the container management areas. These structures are discussed in Part IV, Facility Design.

9. **Buffer zones -** Safety-Kleen stores ignitable wastes in container management areas. The container storage areas meet the buffer zone requirements of 40 CFR 261.176 and 22 CCR 66264.176 (located at least 15 meters (50 feet) from the facility's property line)

10. **Other structures -** The facility plan does not include any structures other than those described above.

11. **Facilities for controlling surface or subsurface drainage -** The facility surface is covered with asphalt; thus drainage into the subsurface soil does not occur under normal operating conditions. The surface is graded to direct run-on and runoff away from the facility. The nearest storm drain is located on Worthen Avenue.

12. **Injection and withdrawal wells:**

    a. **Onsite -** None are located on site.

b. **Offsite -** None are located off site.

3. h. **Locations of**
(22 CCR 66270.14(b)(18)(G), (b)(19))
(40 CFR 270.14(b)(19)(vii))

1. **Power lines –** No power lines cross the facility with the exception of power supply to the facility.

2. **Pipelines -** With the exception of the utility supplies to the facility, no pipelines are cross the facility.

3. **Easements –** A telecommunication tower easement is present onsite.

i. **Distances from hazardous waste management units to:**
(22 CCR 66270.14(b)(18) and (b)(19))
(40 CFR 270.14(b)(19))

1. **Property boundaries** - Property boundaries are shown on Figure I-3. The distance of the hazardous management units (including storage areas, Return/Fill dock, and drum staging area) from the property line are including:

2. **Buildings, on-site and off-site -** As shown on Figure I-4, the distance from the hazardous waste management unit (housed in an on-site building) to the other on-site building is approximately 115 feet. The closest off-site buildings are adjacent to the property.

3. **Public roadways -** The distance of the nearest public roadway (Worthen Avenue), as shown on Figure I-4, from the hazardous waste management unit is 50 feet.

4. **Passenger railways -** The distance of the hazardous waste management unit to the nearest passenger railway is approximately 0.5 miles to the north.

5. **Closest human or environmental receptors -** The closest human receptors to the hazardous waste management units, which could be exposed to site-related chemicals, include on-site workers (0 to 100 feet), and off-site workers (greater than 50 feet). The site is zoned M1 and is located in a light industrial complex.

a. Additional topographic map requirement for regulated units:
(22 CCR 66264.95, 66264.97, 66264.705, 66270.14(c)(3) and (c)(4)(A))
(40 CFR 264.95, 264.97, 270.14(c)(3), 270.14(c)(4)(i))

1. **Waste management area boundaries -** These are shown on Figure I-2

2. **Property boundaries** - Legal boundaries are shown on Figure I-3.

3. **Proposed point of compliance -** There are no land-based units at this facility; therefore, this section is not applicable.

4. **Proposed environmental monitoring point locations -** There are no land-based units at this facility; therefore, this section is not applicable.

5. **Location of the uppermost aquifer and aquifers hydraulically interconnected beneath the facility including direction and flow rate:**

a. **Highest annual elevation** - -41.2 feet below mean Sea Level (MSL).

b. **Lowest annual elevation** - -73.2 feet below MSL Groundwater is expected to occur beneath the site at depths greater than 39 feet to 40 feet below MSL. The groundwater flow rate is unknown, but the direction is to the south-southeast at a relatively flat gradient

6. **If present, the extent of the plumes of contamination or pollution that have migrated from a regulated unit** – GWMW sampling has shown non-detectable for contamination. Safety-Kleen submitted a no further action request to DTSC in 2003.

b. Location of groundwater monitoring wells – There are no monitoring well on site.

c. Location of vadose zone monitoring wells - None are located at the facility.

B. Information Associated with Maps

1. **Written legal description of the property occupied by the facility for which clear title is held**
(22 CCR 66270.14(b)(18)(G))
(40 CFR 270.14(b)(18)(vii))

The legal description of the property can be found in Appendix I-3.

2. **Estimated volume of traffic:**
(22 CCR 6270.14(b)(10))
(40 CFR 207.14(b)(10))

a. **Number of vehicles -** Safety-Kleen currently employs approximately 20 employees who commute to the facility daily (Monday through Friday). The facility operates approximately 12 route trucks to its customers. Trucks are dispatched from the recycle center to the Los Angeles facility in order to transfer waste stored in the underground waste storage tank two to three times per week, on an as-needed basis. A trailer truck is used to transport the drummed wastes stored in the container management area to an approved facility.

b. **Type of vehicles** - Most of the Safety-Kleen employees commute to work in passenger cars or pickup trucks. The route trucks are single-axle with duel wheels and range from 3 to 7 tons in maximum gross weight and 18 to 20 feet in total length. The bulk tanker trucks and trailer trucks have a maximum gross weight of approximately 80,000 pounds with tandem axle weight less than approximately 34,000 pounds in compliance with the California vehicle size and weight limitations. Maximum total dimensions of these trucks are approximately 59'2" long, 8' wide, and 12'5" tall.

3. **Characteristics of permanent access roads:**
(22 CCR 66270.14(b)(10))
(40 CFR 270.14(b)(10))

a. **Surfacing -** The permanent access roads are designed and constructed to serve as industrial area. Roads of this type are generally designed with a minimum of 4 inches of asphalted concrete (see Figure II-5).

b. **Load-bearing capacity -** The permanent access roads are assumed to have a load-bearing capacity consistent with the industrial zoning of the area.

4. **For existing facilities, aerial or surface photographs clearly showing**

all existing:
(22 CCR 6270.13(h))
(40 CFR 270.13(h))

a. **Structures -** See Appendix I-8.

b. **Treatment, storage, disposal areas -** See Appendix I-8.

c. **Future areas for waste treatment, storage, or disposal -** Not applicable.

C. Distance from Holocene Faults (new or modified facilities only)
(22 CCR 66264.18(a), 66270.14(b)(11)(A), (b)(19))
(40 CFR 264.18(a), Part 264, Appendix VI, 270.14(b)(11))

This section does not apply because the facility is not a new facility or a facility that undergoing a substantial modification.

D. Hydro-geologic information (regulated units only)
(22 CCR 66270.14(b)(11)(F), (c)(1) and (2))
(40 CFR 270.14(c)(1) and (2))

This section does not apply to this facility because this facility does not have a surface impoundment, waste pile, land treatment facility, or landfill.

1. **Depth to groundwater** - This section does not apply to this facility because this facility does not have a surface impoundment, waste pile, land treatment facility, or landfill.

2. **Seasonal high groundwater level** - This section does not apply to this facility because this facility does not have a surface impoundment, waste pile, land treatment facility, or landfill.

3. **Aquifers beneath site -** This section does not apply to this facility because this facility does not have a surface impoundment, waste pile, land treatment facility, or landfill.

4. **Aquifers having hydraulic continuity-** This section does not apply to this facility because this facility does not have a surface impoundment, waste pile, land treatment facility, or landfill.

E. Identify whether the facility lies within a 100-year floodplain, and include:
(22 CCR 66264.18(b), 66270.14(b)(11)(B) and (C))
(40 CFR 264.18(b), 270.14(b)(11)(C))

As shown on FigureII-2, the facility is not located within the Special Flood hazard areas inundated by the 100-year flood.

1. **Source of data -** The source of the data is the Flood Insurance Rate Map (FIRM) (Map No. 0601370056C Panel 56 of 112.

2. **Copy of either:**

   a. **Relevant Federal Insurance Administration (FIA) flood map -** A copy of the relevant FIA map is included as Figure II-2.

   b. **Calculations and maps, if FIA map not available -** The 500-year flood level (Special Flood Hazard areas inundated by 500-year flood) is shown on Figure II-2.

3. **500-year flood level (describe and show on topographic map)** - As shown on Figure II-2, the facility is in unshaded Zone X (500-year of minimal flood hazard. FEMA Flood Zone Designation Guideline is Included in Appendix II-1.

4. **Any special flooding factors -** None.

F. If facility lies within the 100-year floodplain, provide the following information (1 and 2, or 3, or 4) (22 CCR 66264.18(b), 66270.14(b)(11)(D) and ((E))
(40 CFR 264.18(b), 270.14(b)(11)(iv) and (v))

1. **Engineering analysis indicating hydrodynamic and hydrostatic forces expected from a 100-year flood**
   (22 CCR 66270.14(b)(11)(D)(1))
   (40 CFR 270.14(B)(11)(iv)(A))

   The property is not located in the 100-year floodplain and therefore this section is not applicable.

2. **Structural or other engineering studies showing design of operational units and flood protection devices and how these will prevent washout**
   (22 CCR 66270.14(b)(11)(D)(2)
   (40 CFR 270.14(b)(11)(iv)(B))

   The USTs are equipped with watertight caps to prevent infiltration of floodwater into the tanks. Furthermore, the tanks are anchored down with a minimum of three feet of earth and concrete, and should a major flood be expected, the tanks can be filled with additional solvent or water to

increase the tank's stability.

3. Detailed description of procedures to remove hazardous waste to safety before facility floods, including:

a. Analysis of timing to ensure that waste can be removed before facility floods
(22 CCR 66270.14(b)(11)(D)(3)(a)
(40 CFR 270.14(b)(11)(iv)(C)(1))

The property is not located in the 100-year floodplain. However, Safety-Kleen can remove the waste before any possible flood. Safety-Kleen can dispatch a truck from the Pomona Distribution Center or the Reedley Recycle Center within an hour of receiving a request. The truck can arrive at the Los Angeles Service Center within 1 to 5 hours thereafter and remove the drums from the site within 2 to 3 hours after arriving at the site. Therefore, no more than 8 hours is required to remove all the drums away from the site. Normal operating procedures will be sufficient for movement of the drums and to minimize potential accidental discharges of wastes.

Capacity of the container storage area is limited to 5,540 gallons. Assuming that storage areas are full at the time of the flood, one 53-foot truck would be required to transfer all containers off site.

b. Description of locations, where wastes will be moved, and demonstration of eligibility to receive wastes
(22 CCR 66270.14(b)(11)(D)(3)(b))
(40 CFR 270.14(b)(11)(iv)(C)(2))

In anticipation of a sever flood, all drums can be quickly scheduled to be hauled off to Pomona and/or Reedley Recycle Center.

c. Planned procedures, equipment, and personnel to be used and means to ensure their availability in time for use
(22 CCR 6270.14(b)(11)(D)(3)(c)
(40 CFR 270.14(b)(11)(iv)(C)(3))

Three trucks will be available from the Safety-Kleen fleet or subcontract haulers to remove all wastes from the facility within an 8-hour period.

d. Potential for accidental discharge of waste during movement
(22 CCR 66270.14(b)(11)(D)(3)(d)

(40 CFR 270.14(B)(11)(iv)(C)(4))

Only registered hazardous waste haulers are being used for removing waste from the facility. Containers used for transport are DOT-approved. These precautions would minimize the discharges of any hazardous waste.

4. Compliance plan and schedule for existing facilities
(22 CCR 66270.14(b)(11)(E))
(40 CFR 270.14(b)(11)(v))

Not applicable. The facility is in compliance with section 66264.18(b).

FIGURE II-1

ASSESORS INDEX MAP

5437

SCALE 1" = 500'

Revised
1-28-59
2-4-59
-9-60
-1-60
-10-61
-6-62
-31-64
-1-64
0422
70605
40927
50131
60130

10-27-65
660513
661110
670516

INDEX - 5437

SCALE 1IN.=500FT.

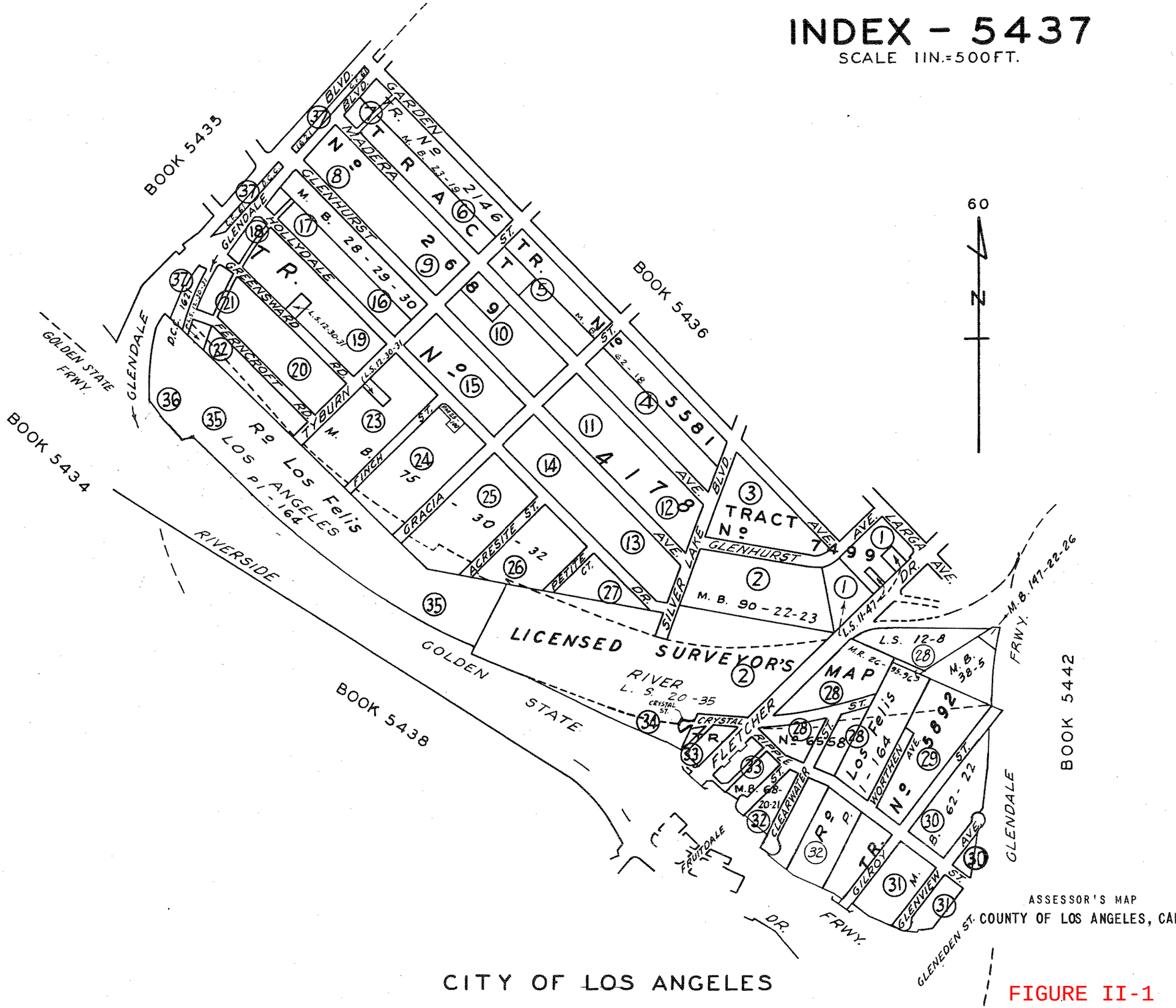

ASSESSOR'S MAP
COUNTY OF LOS ANGELES, CAL

CITY OF LOS ANGELES

FIGURE II-1

FIGURE II-2

FLOODPLAIN MAP

NOTES TO USERS

This map is for use in administering the National Flood Insurance Program. It does not necessarily identify all areas subject to flooding, particularly from local drainage sources of small size. The **community map repository** should be consulted for possible updated or additional flood hazard information.

To obtain more detailed information in areas where **Base Flood Elevations** (BFEs) and/or **floodways** have been determined, users are encouraged to consult the Flood Profiles and Floodway Data and/or Summary of Stillwater Elevations tables contained within the Flood Insurance Study (FIS) report that accompanies this FIRM. Users should be aware that BFEs shown on the FIRM represent rounded whole-foot elevations. These BFEs are intended for flood insurance rating purposes only and should not be used as the sole source of flood elevation information. Accordingly, flood elevation data presented in the FIS report should be utilized in conjunction with the FIRM for purposes of construction and/or floodplain management.

Coastal Base Flood Elevations shown on this map apply only landward of 0.0' North American Vertical Datum of 1988 (NAVD 88). Users of this FIRM should be aware that coastal flood elevations are also provided in the Summary of Stillwater Elevations table in the Flood Insurance Study report for this jurisdiction. Elevations shown in the Summary of Stillwater Elevations table should be used for construction and/or floodplain management purposes when they are higher than the elevations shown on this FIRM.

Boundaries of the **floodways** were computed at cross sections and interpolated between cross sections. The floodways were based on hydraulic considerations with regard to requirements of the National Flood Insurance Program. Floodway widths and other pertinent floodway data are provided in the Flood Insurance Study report for this jurisdiction.

Certain areas not in Special Flood Hazard Areas may be protected by **flood control structures.** Refer to Section 2.4 "Flood Protection Measures" of the Flood Insurance Study report for information on flood control structures for this jurisdiction.

The **projection** used in the preparation of this map was Universal Transverse Mercator (UTM) zone 11. The **horizontal datum** was NAD83, GRS1980 spheroid. Differences in datum, spheroid, projection or UTM zones used in the production of FIRMs for adjacent jurisdictions may result in slight positional differences in map features across jurisdiction boundaries. These differences do not affect the accuracy of this FIRM.

Flood elevations on this map are referenced to the North American Vertical Datum of 1988. These flood elevations must be compared to structure and ground elevations referenced to the same **vertical datum.** For information regarding conversion between the National Geodetic Vertical Datum of 1929 and the North American Vertical Datum of 1988, visit the National Geodetic Survey website at http://www.ngs.noaa.gov/ or contact the National Geodetic Survey at the following address:

NGS Information Services
NOAA, N/NGS12
National Geodetic Survey
SSMC-3, #9202
1315 East-West Highway
Silver Spring, MD 20910-3282

To obtain current elevation, description, and/or location information for **bench marks** shown on this map, please contact the Information Services Branch of the National Geodetic Survey at **(301) 713-3242,** or visit its website at http://www.ngs.noaa.gov/.

Base map information shown on this FIRM was derived from U.S. Geological Survey Digital Orthophoto Quadrangles produced at a scale of 1:12,000 from photography dated 1994 or later and from National Geospatial Intelligence Agency imagery produced at a scale of 1:4,000 from photography dated 2003 or later.

This map reflects more detailed and up-to-date **stream channel configurations** than those shown on the previous FIRM for this jurisdiction. The floodplains and floodways that were transferred from the previous FIRM may have been adjusted to conform to these new stream channel configurations. As a result, the Flood Profiles and Floodway Data tables *in the Flood Insurance Study report (which contains authoritative hydraulic data)* may reflect stream channel distances that differ from what is shown on this map.

Corporate limits shown on this map are based on the best data available at the time of publication. Because changes due to annexations or de-annexations may have occurred after this map was published, map users should contact appropriate community officials to verify current corporate limit locations.

Please refer to the separately printed **Map Index** for an overview map of the county showing the layout of map panels; community map repository addresses; and a Listing of Communities table containing National Flood Insurance Program dates for each community as well as a listing of the panels on which each community is located.

Contact the **FEMA Map Service Center** at 1-800-358-9616 for information on available products associated with this FIRM. Available products may include previously issued Letters of Map Change, *a Flood Insurance Study report,* and/or digital versions of this map. The FEMA Map Service Center may also be reached by Fax at 1-800-358-9620 and its website at http://www.msc.fema.gov/.

If you have **questions about this map** or questions concerning the National Flood Insurance Program in general, please call **1-877-FEMA MAP** (1-877-336-2627) or visit the FEMA website at http://www.fema.gov/.

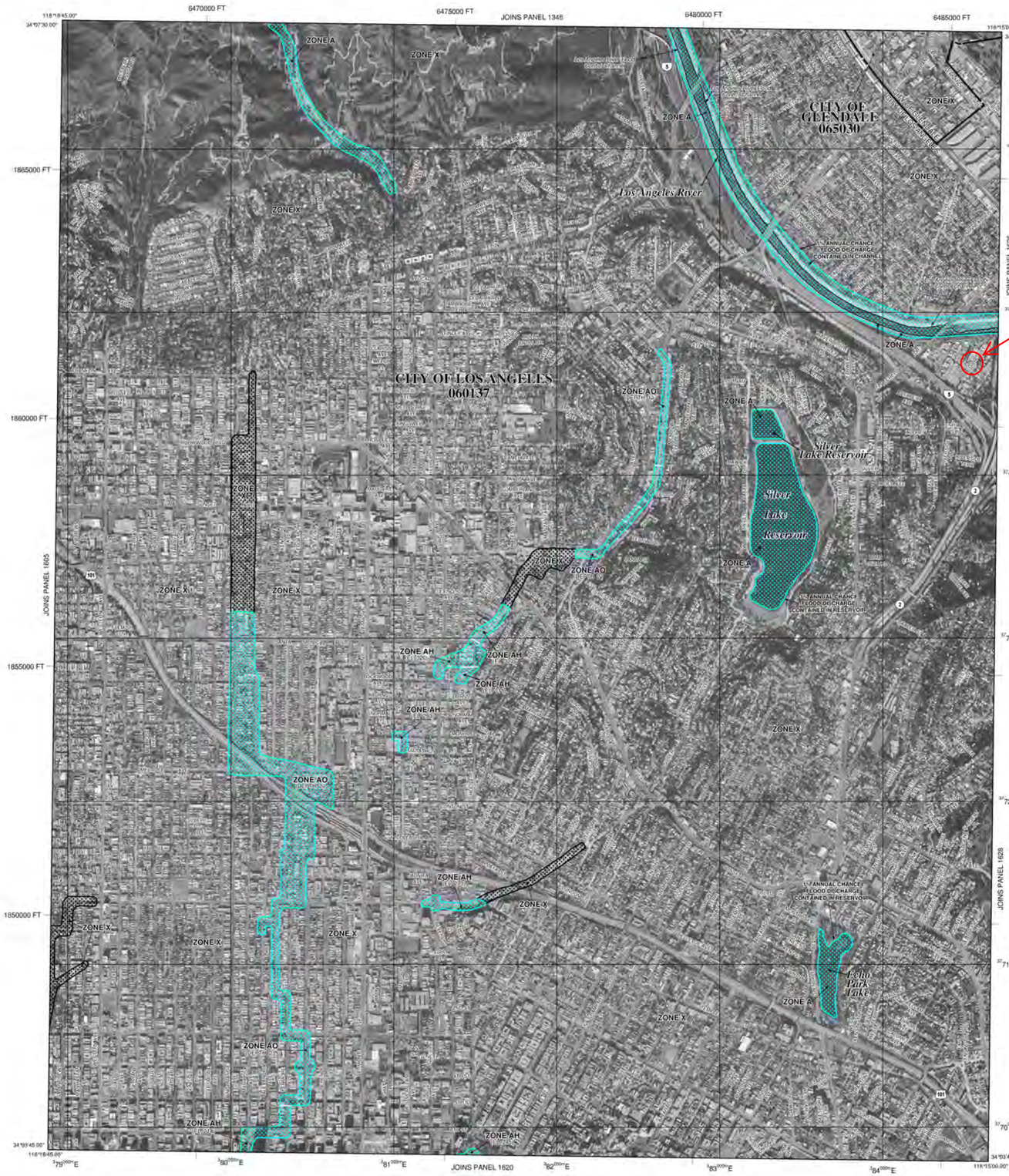

FIGURE II-2

LEGEND

SPECIAL FLOOD HAZARD AREAS (SFHAs) SUBJECT TO INUNDATION BY THE 1% ANNUAL CHANCE FLOOD

The 1% annual chance flood (100-year flood), also known as the base flood, is the flood that has a 1% chance of being equaled or exceeded in any given year. The Special Flood Hazard Area is the area subject to flooding by the 1% annual chance flood. Areas of Special Flood Hazard include Zones A, AE, AH, AO, AR, A99, V and VE. The Base Flood Elevation is the water-surface elevation of the 1% annual chance flood.

ZONE A	No Base Flood Elevations determined.
ZONE AE	Base Flood Elevations determined.
ZONE AH	Flood depths of 1 to 3 feet (usually areas of ponding); Base Flood Elevations determined.
ZONE AO	Flood depths of 1 to 3 feet (usually sheet flow on sloping terrain); average depths determined. For areas of alluvial fan flooding, velocities also determined.
ZONE AR	Special Flood Hazard Area formerly protected from the 1% annual chance flood by a flood control system that was subsequently decertified. Zone AR indicates that the former flood control system is being restored to provide protection from the 1% annual chance or greater flood.
ZONE A99	Area to be protected from 1% annual chance flood by a Federal flood protection system under construction; no Base Flood Elevations determined.
ZONE V	Coastal flood zone with velocity hazard (wave action); no Base Flood Elevations determined.
ZONE VE	Coastal flood zone with velocity hazard (wave action); Base Flood Elevations determined.

FLOODWAY AREAS IN ZONE AE

The floodway is the channel of a stream plus any adjacent floodplain areas that must be kept free of encroachment so that the 1% annual chance flood can be carried without substantial increases in flood heights.

OTHER FLOOD AREAS

ZONE X	Areas of 0.2% annual chance flood; areas of 1% annual chance flood with average depths of less than 1 foot or with drainage areas less than 1 square mile; and areas protected by levees from 1% annual chance flood.

OTHER AREAS

ZONE X	Areas determined to be outside the 0.2% annual chance floodplain.
ZONE D	Areas in which flood hazards are undetermined, but possible.

COASTAL BARRIER RESOURCES SYSTEM (CBRS) AREAS

OTHERWISE PROTECTED AREAS (OPAs)

CBRS areas and OPAs are normally located within or adjacent to Special Flood Hazard Areas.

1% annual chance floodplain boundary
0.2% annual chance floodplain boundary
Floodway boundary
Zone D boundary
CBRS and OPA boundary
Boundary dividing Special Flood Hazard Areas of different Base Flood Elevations, flood depths or flood velocities.

513	Base Flood Elevation line and value; elevation in feet*
(EL 987)	Base Flood Elevation value where uniform within zone; elevation in feet*

* Referenced to the North American Vertical Datum of 1988 (NAVD 88)

A — A	Cross section line
23 - - - - - 23	Transect line
87°07'30", 32°22'30"	Geographic coordinates referenced to the North American Datum of 1983 (NAD 83)
5275000mN	1000-meter Universal Transverse Mercator grid values, zone 11
6000000 FT	5000-foot grid ticks: California State Plane coordinate system, V zone (FIPSZONE 0405), Lambert Conformal Conic
DX5510 ×	Bench mark (see explanation in Notes to Users section of this FIRM panel)
• M1.5	River Mile

MAP REPOSITORIES
Refer to Map Repositories list on Map Index

EFFECTIVE DATE OF COUNTYWIDE
FLOOD INSURANCE RATE MAP
September 26, 2008
EFFECTIVE DATE(S) OF REVISION(S) TO THIS PANEL

For community map revision history prior to countywide mapping, refer to the Community Map History table located in the Flood Insurance Study report for this jurisdiction.

To determine if flood insurance is available in this community, contact your insurance agent or call the National Flood Insurance Program at 1-800-638-6620.

MAP SCALE 1" = 1000'

500 0 1000 2000 FEET
300 0 300 600 METERS

NFIP

NATIONAL FLOOD INSURANCE PROGRAM

PANEL 1610F

FIRM
FLOOD INSURANCE RATE MAP
LOS ANGELES COUNTY, CALIFORNIA
AND INCORPORATED AREAS

PANEL 1610 OF 2350
(SEE MAP INDEX FOR FIRM PANEL LAYOUT)

CONTAINS:

COMMUNITY	NUMBER	PANEL	SUFFIX
GLENDALE, CITY OF	065030	1610	F
LOS ANGELES, CITY OF	060137	1610	F

Notice to User: The **Map Number** shown below should be used when placing map orders; the **Community Number** shown above should be used on insurance applications for the subject community.

MAP NUMBER
06037C1610F

EFFECTIVE DATE
SEPTEMBER 26, 2008

Federal Emergency Management Agency

FIGURE II-3

WIND ROSE MAP

WIND ROSE PLOT:

Station #23174 - LOS ANGELES/INT'L ARPT, CA

DISPLAY:

Wind Speed
Direction (blowing from)

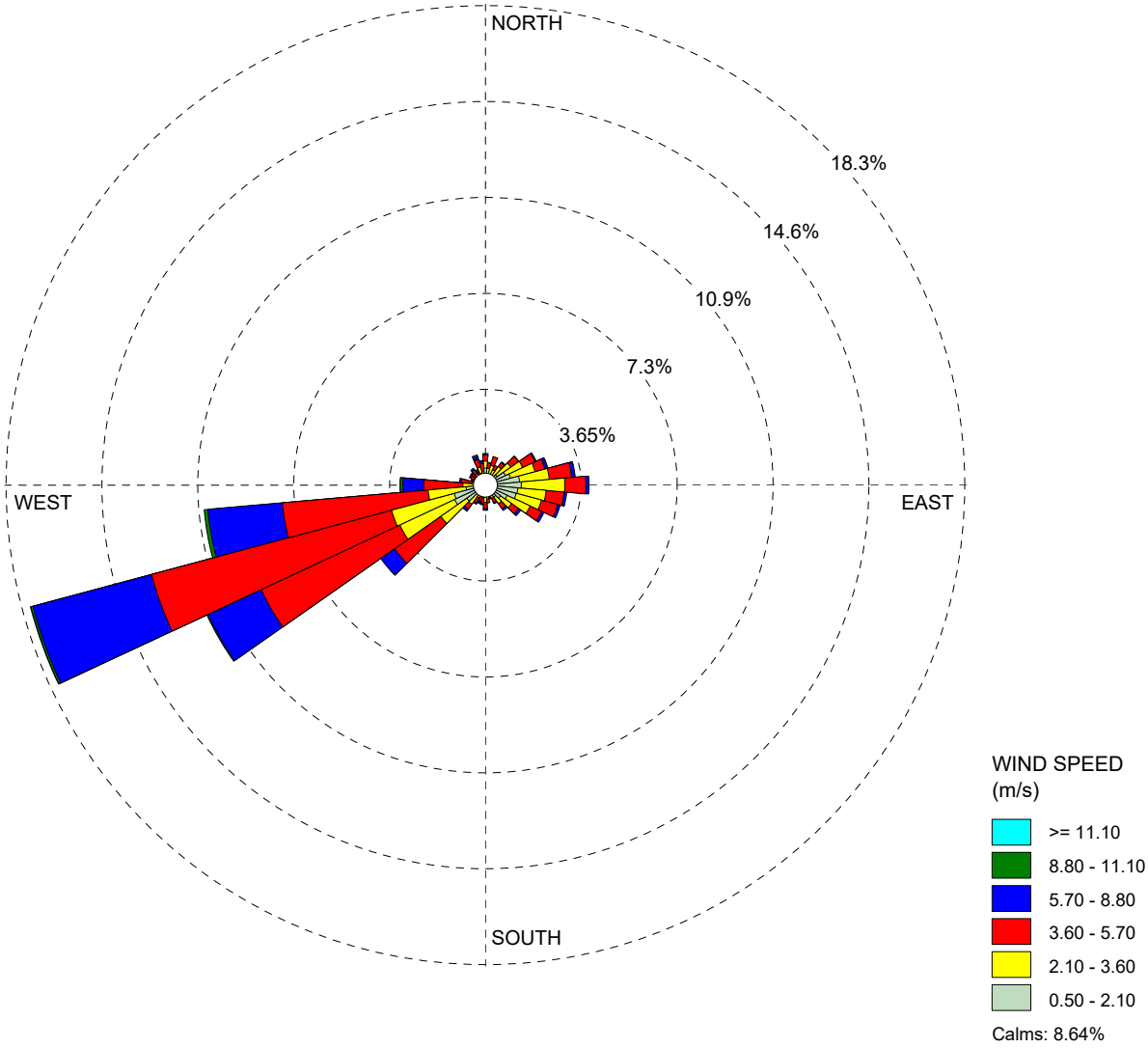

	DATA PERIOD: **Start Date: 1/1/1992 - 00:00** **End Date: 12/31/1992 - 23:00**	COMPANY NAME: SAFETY-KLEEN	
		MODELER:JEK	FIGURE II-3
	CALM WINDS: **8.64%**	TOTAL COUNT: **8784 hrs.**	
	AVG. WIND SPEED: **3.52 m/s**	DATE: **6/11/2018**	PROJECT NO.:7116-SP00-049 **LOS ANGELES, CA.**

WRPLOT View - Lakes Environmental Software

FIGURE II-4

ZONING MAP

ZIMAS PUBLIC

Generalized Zoning

04/10/2018

City of Los Angeles
Department of City Planning

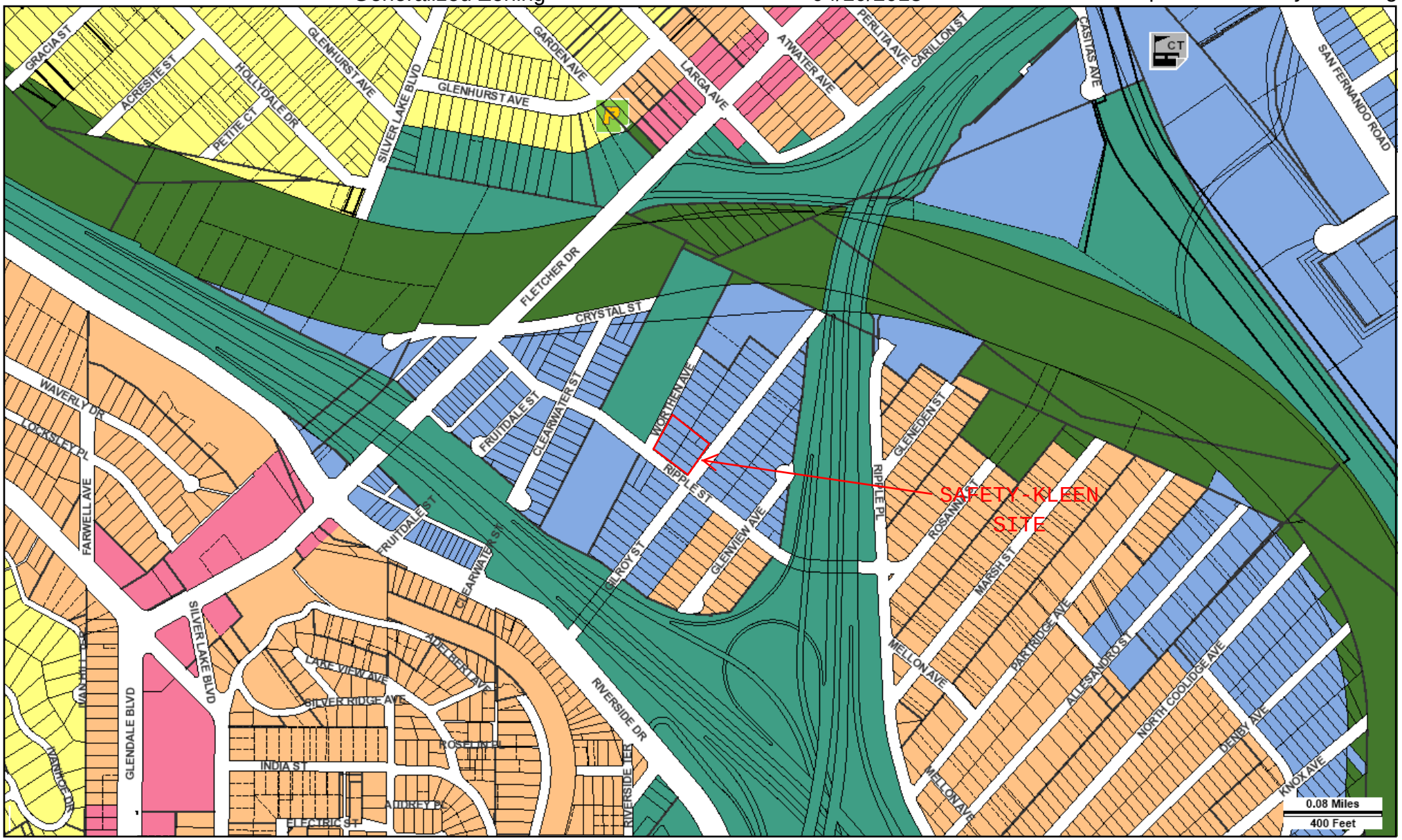

FIGURE II-4

Streets Copyright (c) Thomas Brothers Maps, Inc.

LEGEND

GENERALIZED ZONING

- OS, GW
- A, RA
- RE, RS, R1, RU, RZ, RW1
- R2, RD, RMP, RW2, R3, RAS, R4, R5
- CR, C1, C1.5, C2, C4, C5, CW, ADP, LASED, CEC, USC, PVSP, PPSP
- CM, MR, WC, CCS, UV, UI, UC, M1, M2, LAX, M3, SL
- P, PB
- PF

GENERAL PLAN LAND USE

LAND USE

RESIDENTIAL

- Minimum Residential
- Very Low / Very Low I Residential
- Very Low II Residential
- Low / Low I Residential
- Low II Residential
- Low Medium / Low Medium I Residential
- Low Medium II Residential
- Medium Residential
- High Medium Residential
- High Density Residential
- Very High Medium Residential

COMMERCIAL

- Limited Commercial
- Limited Commercial - Mixed Medium Residential
- Highway Oriented Commercial
- Highway Oriented and Limited Commercial
- Highway Oriented Commercial - Mixed Medium Residential
- Neighborhood Office Commercial
- Community Commercial
- Community Commercial -Mixed High Residential
- Regional Center Commercial

INDUSTRIAL

- Commercial Manufacturing
- Limited Manufacturing
- Light Manufacturing
- Heavy Manufacturing
- Hybrid Industrial

PARKING

- Parking Buffer

PORT OF LOS ANGELES

- General / Bulk Cargo - Non Hazardous (Industrial / Commercial)
- General / Bulk Cargo - Hazard
- Commercial Fishing
- Recreation and Commercial
- Intermodal Container Transfer Facility Site

LOS ANGELES INTERNATIONAL AIRPORT

- Airport Landside / Airport Landside Support
- Airport Airside
- LAX Airport Northside

OPEN SPACE / PUBLIC FACILITIES

- Open Space
- Public / Open Space
- Public / Quasi-Public Open Space
- Other Public Open Space
- Public Facilities

FRAMEWORK

COMMERCIAL

- Neighborhood Commercial
- General Commercial
- Community Commercial
- Regional Mixed Commercial

INDUSTRIAL

- Limited Industrial
- Light Industrial

FIGURE II-4

CIRCULATION

STREET

- Arterial Mountain Road
- Collector Scenic Street
- Collector Street
- Collector Street (Hillside)
- Collector Street (Modified)
- Collector Street (Proposed)
- Country Road
- Divided Major Highway II
- Divided Secondary Scenic Highway
- Local Scenic Road
- Local Street
- Major Highway (Modified)
- Major Highway I
- Major Highway II
- Major Highway II (Modified)
- Major Scenic Highway
- Major Scenic Highway (Modified)
- Major Scenic Highway II
- Mountain Collector Street
- Park Road
- Parkway
- Principal Major Highway
- Private Street
- Scenic Divided Major Highway II
- Scenic Park
- Scenic Parkway
- Secondary Highway
- Secondary Highway (Modified)
- Secondary Scenic Highway
- Special Collector Street
- Super Major Highway

FREEWAYS

- Freeway
- Interchange
- On-Ramp / Off- Ramp
- Railroad
- Scenic Freeway Highway

MISC. LINES

- Airport Boundary
- Bus Line
- Coastal Zone Boundary
- Coastline Boundary
- Collector Scenic Street (Proposed)
- Commercial Areas
- Commercial Center
- Community Redevelopment Project Area
- Country Road
- DWP Power Lines
- Desirable Open Space
- Detached Single Family House
- Endangered Ridgeline
- Equestrian and/or Hiking Trail
- Hiking Trail
- Historical Preservation
- Horsekeeping Area
- Local Street
- MSA Desirable Open Space
- Major Scenic Controls
- Multi-Purpose Trail
- Natural Resource Reserve
- Park Road
- Park Road (Proposed)
- Quasi-Public
- Rapid Transit Line
- Residential Planned Development
- Scenic Highway (Obsolete)
- Secondary Scenic Controls
- Secondary Scenic Highway (Proposed)
- Site Boundary
- Southern California Edison Power
- Special Study Area
- Specific Plan Area
- Stagecoach Line
- Wildlife Corridor

POINTS OF INTEREST

- Alternative Youth Hostel (Proposed)
- Animal Shelter
- Area Library
- Area Library (Proposed)
- Bridge
- Campground
- Campground (Proposed)
- Cemetery
- HW Church
- City Hall
- Community Center
- Community Library
- Community Library (Proposed Expansion)
- Community Library (Proposed)
- Community Park
- Community Park (Proposed Expansion)
- Community Park (Proposed)
- Community Transit Center
- Convalescent Hospital
- Correctional Facility
- Cultural / Historic Site (Proposed)
- Cultural / Historical Site
- Cultural Arts Center
- DMV DMV Office
- DWP DWP
- DWP Pumping Station
- Equestrian Center
- HQ Fire Department Headquarters
- Fire Station
- Fire Station (Proposed Expansion)
- Fire Station (Proposed)
- Fire Supply & Maintenance
- Fire Training Site
- Fireboat Station
- Health Center / Medical Facility
- Helistop
- Historic Monument
- Historical / Cultural Monument
- Horsekeeping Area
- Horsekeeping Area (Proposed)
- Horticultural Center
- Hospital
- Hospital (Proposed)
- HW House of Worship
- e Important Ecological Area
- e Important Ecological Area (Proposed)
- Interpretive Center (Proposed)
- JC Junior College
- M MTA / Metrolink Station
- M MTA Station
- MTA Stop
- MWD MWD Headquarters
- Maintenance Yard
- Municipal Office Building
- P Municipal Parking lot
- Neighborhood Park
- Neighborhood Park (Proposed Expansion)
- Neighborhood Park (Proposed)
- Oil Collection Center
- P Parking Enforcement
- HQ Police Headquarters
- Police Station
- Police Station (Proposed Expansion)
- Police Station (Proposed)
- Police Training site
- PO Post Office
- Power Distribution Station
- Power Distribution Station (Proposed)
- Power Receiving Station
- Power Receiving Station (Proposed)
- C Private College
- E Private Elementary School
- Private Golf Course
- Private Golf Course (Proposed)
- JH Private Junior High School
- PS Private Pre-School
- Private Recreation & Cultural Facility
- SH Private Senior High School
- SF Private Special School
- E Public Elementary (Proposed Expansion)
- E Public Elementary School
- E Public Elementary School (Proposed)
- Public Golf Course
- Public Golf Course (Proposed)
- Public Housing
- Public Housing (Proposed Expansion)
- JH Public Junior High School
- JH Public Junior High School (Proposed)
- MS Public Middle School
- SH Public Senior High School
- SH Public Senior High School (Proposed)
- Pumping Station
- Pumping Station (Proposed)
- Refuse Collection Center
- Regional Library
- Regional Library (Proposed Expansion)
- Regional Library (Proposed)
- Regional Park
- Regional Park (Proposed)
- RPD Residential Plan Development
- Scenic View Site
- Scenic View Site (Proposed)
- ADM School District Headquarters
- SC School Unspecified Loc/Type (Proposed)
- Skill Center
- SS Social Services
- Special Feature
- Special Recreation (a)
- SF Special School Facility
- SF Special School Facility (Proposed)
- Steam Plant
- sm Surface Mining
- Trail & Assembly Area
- Trail & Assembly Area (Proposed)
- UTL Utility Yard
- Water Tank Reservoir
- Wildlife Migration Corridor
- Wildlife Preserve Gate

SCHOOLS/PARKS WITH 500 FT. BUFFER

- Existing School/Park Site
- Planned School/Park Site
- Inside 500 Ft. Buffer

- Aquatic Facilities
- Beaches
- Child Care Centers
- Dog Parks
- Golf Course
- Historic Sites
- Horticulture/Gardens
- Skate Parks
- Other Facilities
- Park / Recreation Centers
- Parks
- Performing / Visual Arts Centers
- Recreation Centers
- Senior Citizen Centers
- Opportunity School
- Charter School
- Elementary School
- Span School
- Special Education School
- High School
- Middle School
- Early Education Center

COASTAL ZONE

- Coastal Zone Commission Authority
- Calvo Exclusion Area
- Not in Coastal Zone
- Dual Jurisdictional Coastal Zone

TRANSIT ORIENTED COMMUNITIES (TOC)

- Tier 1
- Tier 2
- Tier 3
- Tier 4

Note: TOC Tier designation and map layers are for reference purposes only. Eligible projects shall demonstrate compliance with Tier eligibility standards prior to the issuance of any permits or approvals. As transit service changes, eligible TOC Incentive Areas will be updated.

WAIVER OF DEDICATION OR IMPROVEMENT

- Public Work Approval (PWA)
- Waiver of Dedication or Improvement (WDI)

LAMC SECTION 85.02 (VEHICLE DWELLING)

- No vehicle dwelling anytime
- No vehicle dwelling overnight between 9:00 PM - 6:00 AM. Must comply with all posted parking restrictions
- Vehicle dwelling allowed. Must comply with all posted parking restrictions

OTHER SYMBOLS

- Lot Line
- Tract Line
- Lot Cut
- Easement
- Zone Boundary
- Building Line
- Lot Split
- Community Driveway
- Lot Ties
- Building Outlines 2014
- Building Outlines 2008
- Airport Hazard Zone
- Census Tract
- Coastal Zone
- Council District
- LADBS District Office
- Downtown Parking
- Fault Zone
- Fire District No. 1
- Tract Map
- Parcel Map
- Flood Zone
- Hazardous Waste
- High Wind Zone
- Hillside Grading
- Historic Preservation Overlay Zone
- Specific Plan Area
- Very High Fire Hazard Severity Zone
- Oil Wells

FIGURE II-5

TRAFFIC FLOW PATTERNS

TRAFFIC FLOW PATTERNS

SAFETY-KLEEN LOS ANGELES
2918 WORTHEN AVE

FIGURE II-5

APPENDIX II-1

Definitions of FEMA Flood Zone Designations

Definitions of FEMA Flood Zone Designations

FEMA flood zones are geographic areas that the FEMA has defined according to varying levels of flood risk. A flood is any relatively high streamflow overtopping the natural or artificial banks in any reach of a stream. Each zone reflects the severity or type of flooding in the area.

FEMA Map Service Center: https://hazards.fema.gov/wps/portal/mapviewer
•Where available, a GIS shapefile has been placed in the NRCS service center's F:\geodata\hydrography folder.

Moderate to Low Risk Areas

ZONE	DESCRIPTION
B and X (shaded)	**Between the limits of the 100-year and 500-year Floodplain**, area with a 0.2% (or 1 in 500 chance) annual chance of flooding. This zone is also used to designate base floodplains of lesser hazards, such as areas protected by levees from 100-year flood, or shallow flooding areas with average depths of less than one foot or drainage areas less than 1 square mile.
C and X (unshaded)	**500-year Floodplain**, area of minimal flood hazard.

High Risk Areas

ZONE	DESCRIPTION
A	**100-year Floodplain**, areas with a 1% annual chance of flooding. Because detailed analyses are not performed for such areas; no depths or base flood elevations are shown within these zones.
AE A1-30 (old format)	**100-year Floodplain.** The base floodplain where base flood elevations are provided. AE Zones are now used on new format FIRMs instead of A1-A30 Zones.
AH	**100-year Floodplain**, areas with a 1% annual chance of shallow flooding, usually in the form of a pond, with an average depth ranging from 1 to 3 feet. flood elevations derived from detailed analyses are shown at selected intervals within these zones.
AO	**100-year Floodplain**, river or stream flood hazard areas, and areas with a 1% or greater chance of shallow flooding each year, usually in the form of sheet flow, with an average depth ranging from 1 to 3 feet. Average flood depths derived from detailed analyses are shown within these zones.
AR	Areas with a temporarily increased flood risk due to the building or restoration of a flood control system (such as a levee or a dam).
A99	100-year Floodplain, areas with a 1% annual chance of flooding that will be protected by a Federal flood control system where construction has reached specified legal requirements. No depths or base flood elevations are shown within these zones.

Undetermined Risk Areas

ZONE	DESCRIPTION
D	Areas with possible but undetermined flood hazards. No flood hazard analysis has been conducted. Flood insurance rates are commensurate with the uncertainty of the flood risk.

Data Provided by FEMA Map Service Center, P.O. Box 3617 Oakton, Virginia 22124-9617 Phone: (877) 336-2627.
Online at: https://msc.fema.gov/

Part III
WASTE ANALYSIS PLAN

Part III
WASTE ANALYSIS PLAN

INTRODUCTION

In accordance with 40 CFR 264.13, 40 CFR 270.14(b)(2) and (3), and Title 22 of the California Code of Regulations, Section 66264.13, this Waste Analysis Plan (WAP) provides the Safety-Kleen Los Angeles Service Center (LA Branch) with the information needed to: 1) verify that the waste it receives is the waste described on the manifest and, 2) to manage the hazardous wastes that are permitted to be stored at the facility. This WAP is written to meet the requirements of 22 CCR 66264.13 and is applicable only to permitted waste streams. This WAP also conforms to the requirements of U.S. EPA Publication PB94-963603, OSWER 9938.4-03, "Waste Analysis at Facilities that Generate, Treat, Store, and Dispose of Hazardous Waste". It is not written for any waste stream handled on a transfer basis or for non-hazardous waste. The facility acts as an exempt transfer facility following requirements of 22 section 66263.18 for the waste streams that are handled on transfer basis.

Safety-Kleen is an international supplier and reclaimer of parts-cleaner solvents known as parts washer solvent and immersion cleaner. Safety-Kleen provides these part-cleaning solvents to businesses engaged in services such as industrial maintenance and automotive repair, where solvents are used to clean oil, grease, and dirt from metal parts. When the solvents become used and are no longer cleaning to the customer's satisfaction, they are collected by Safety-Kleen and replaced with clean (virgin or recycled) solvents. The used solvents are brought back by Safety-Kleen to the Los Angeles Branch**,** and ultimately transported to an appropriate recycling or treatment facility by Safety-Kleen or approved transporters

The used petroleum-based (mineral spirits) solvents of the Safety-Kleen are the primary feedstock for the generation of Safety-Kleen's recycled mineral spirits solvent products. As a result, quality control of the used solvents is necessary to ensure that reclamation (for petroleum-based solvent) occurs in the safest and most efficient manner possible. The Los Angeles Branch is permitted to accept and store the spent mineral spirits and aqueous parts washer (APW) solvents by establishing procedures consisting of: 1) Qualitative/Visual Waste Analysis and 2) Quantitative Waste Analysis via the Annual Recharacterization (AR) Program. These procedures will be documented by the Los Angeles Branch and will also provide the quality control of the used solvents for the purpose of reclamation/treatment.

Safety-Data Sheets (SDSs) for parts washer solvents (mineral spirits and APW solvent) are included in Appendix III-1.

Safety-Kleen generates drum washer sediment from washing/cleaning drums containing used parts washer solvent (consisting of soils, oils, grease, water, small amounts of solvent, and some metal parts). Safety-Kleen also generates waste solvent tank bottom sediment, personal protective clothing, spill debris and sampling debris. Characterization of these Safety-Kleen generated wastes is based on knowledge of the waste stream and is derived from the characterization of the wastes that Safety-Kleen accepts thru the drum washer. The drum washer sediment and the tank bottom sediment are derived from the used parts washer solvent.

A. Waste Acceptance Procedures

If the waste passes the quality control (Table III-4), the generator certifies by signing an electronic Hand-held (HH) receipt at the time of service that no material change has occurred either in the characteristics of the waste/material or in the process generating the waste/material. A copy of a Hand-held receipt is included in Appendix III-2. Wastes that do not pass the quality control evaluation (color, smell, volume, etc.) will not be picked up from the generator and will be further evaluated. to determine applicability to the recycling program and to the expected manifest description. Examples of contaminates would be the addition of inks that would alter the color and volume of the material, the addition of gasoline that would alter the odor and volume of the material, etc. The generator will be questioned by the Safety-Kleen's employee as to what may have caused the waste to be out of specification. If the generator has unclear or no knowledge of what caused the variation, analytical testing will be required to determine the unknown contaminant(s) and to assign the appropriate waste description and coding. Depending on what characteristic is out of specification, the analytical testing may include metals, volatiles, flash point, and pH. However, if the generator has a clear understanding of what caused the variation (for example, an employee dumped gasoline into the parts cleaner), a Waste Material Profile (Appendix III-3) will be completed using an internal electronic form and forwarded to our Central Profile Group. The Waste Material Profile requires a series of information to be completed including a description of the waste, physical properties, chemical composition, constituents, regulatory status, DOT information, and transportation requirements. The Central Profile Group is an internal team of chemists who will review the profile and assign the appropriate waste description and coding.

Once the cause of the out-of-specification characteristic(s) has been identified through sampling results (prequal) or a signed Waste Material Profile, a determination is made as to whether the waste is materially the same as the originally anticipated as a core waste. If the waste is determined to be essentially the same (e.g., solvent transferred from one parts washer to another causing the volume specification to fail), it may continue to be picked up and manifested as scheduled. However, if it is determined that the waste is contaminated with uncharacteristic material, the waste will need to be managed under the Containerized Waste Service (CWS). CWS refers to characterizing waste through prequal or a signed Waste Material Profile.

Safety-Kleen's customers are typically Very Small Quantity Generators (VSQG), or Small Quantity Generators (SQG) who operate businesses that generate only one type of hazardous waste. As described above, Safety-Kleen has extensive knowledge of the waste streams it accepts. This knowledge of these waste streams is the basis for this WAP. This knowledge is confirmed by Qualitative/Visual Waste Analysis ('field testing') and Quantitative Waste Analysis (AR Program).

The following describes the specific control procedures for the waste streams managed at the Los Angeles Branch. Specifics regarding Qualitative/Visual Analysis and Quantitative Analysis AR are provided in Tables III-1 to III-4.

Permitted Waste streams: The only permitted waste stream at the facility is spent parts washer solvent (petroleum- or aqueous-based). Other containerized wastes not manifested to the Los Angeles Branch is held for up to 10-days only as an exempt transfer waste.

Safety-Kleen limits the use of its products to function-specific applications of part cleaning involving degreasing and removal of baked-on residues. Safety-Kleen has its customers certify:

"Customer agrees that it will not introduce any substance into the parts washer solvent, including without limitation, any hazardous waste or hazardous waste constituent, except to the extent such introduction is incidental to the normal use of the machine. Customer further agrees that it will not clean parts/paint guns that have been contaminated with or otherwise introduce polychlorinated biphenyls (PCB's), herbicides, pesticides, dioxins or listed hazardous waste into the parts washer cleaning solution."

The customer is required to make this certification for every waste removal service. Safety-Kleen provides and services the equipment the solvent and cleaners are used in (See Appendix III-2). Safety-Kleen will not pick-up from the customer location used solvent and cleaners that the Safety-Kleen Service Specialist believes, based on volume, color or smell (most solvents have a characteristic smell) has been altered (Qualitative Waste Analysis).

If the Service Specialist believes the waste has been altered, the drum will be refused pending further investigation. A Waste Material Profile will be completed, or a sample will be taken from the drum and analyzed for the parameters listed in Table III-2. If the results of the review of the Waste Material Profile or if the sample results indicate that the used solvent/cleaner is acceptable it will be managed within the Parts Washer/Cleaner program. If the analytical resulted indicate that the solvent/cleaner has been altered, then the customer may have Safety-Kleen manage the waste separately at another appropriate facility, which may require it to be (for example) either incinerated or burned for energy recovery.

B. Waste Identification and General Information (22 CCR 66260.210, 66264.13, 66268.5, 66268.7, 66270.12(i) & (j), 66270.14(b)(2), (b)(19) & (b)(20); H&SC 251431) (40 CFR 264.13, 270.14(b)(3), 286.5, 268.7)

Identify for each hazardous waste handled:

<u>USED PARTS WASHER SOLVENT (MINERAL SPIRITS/AQUEOUS CLEANERS INCLUDING SLUDGES AND TANK BOTTOMS)</u>

1. USEPA Waste Code[1]

[1] Waste code determined from 40 CFR Part 261.

RCRA Waste Codes may include D001 (Ignitable Waste), D004 through D011, D018, D039, and D040.

2. California Waste Code
(22 CCR 22670.14(b)(19))

The Department of Toxic Substances Control waste codes applicable to this waste stream include: 133, 134, 135, and 213

3. Waste name with restricted wastes identified
(22 CCR 66268.5, 66270.13(j))
(40 CFR 268.5, 270.13(j))

Used Parts washer miniral spirits solvent is restricted from land disposal. Used aqueous parts washer does not carry waste codes that are restricted from land disposal. LDR requirements are addressed in Section III.I.2.

4. For land disposal facilities receiving restricted wastes:
(22 CCR 66268.5, 66270.14(b)(20); H&SC 251430)
(40 CFR 268.5, 270.14(b)(21))

Not applicable.

5. Hazardous Properties of the Waste
(22 CCR, Division 4.5, Chapter 11, Articles 2-5)
(40 CFR part 261, subparts 8-D))

a. **Physical and chemical properties**: The used solvent consists primarily of either:

1. Mineral Spirits petroleum solvent, water, solids (i.e., metal bearing residue), oil, and grease.
2. Aqueous (water) based solvents with various proprietary Arm & Hammer cleaning soap (surfactants); the only reason that this material is a hazardous waste is because it fails the Aquatic Toxicity standard for fish under 22 CCR 66261.24.a.6.

b. **Ignitability**: The virgin/recycled Safety-Kleen parts washer solvent (Petroleum- or aqueous-based) is not ignitable due to a flash point more than 140°F. However, even though the Annual Recharacterization of the solvents show that the waste parts washer solvents do not exhibit the ignitability characteristic (D001), because this is a 10-yr permit the code is included in the event this changes over that 10-yr permit period.

c. **Corrosivity**: The used solvent is not a corrosive waste.

d. **Reactivity**: The used solvent is not a reactive waste.

e. **Incompatibility**: The petroleum-based used solvent is potentially incompatible with oxidizers. All wastes are properly segregated by hazard class. The waste is compatible with the containers and tank in which it will be stored.

6. Estimated Monthly and Annual Quantities Produced and Units of Measure
(22 CCR 66270.13(j), 66270.14(b)(19))
(40 CFR 270.13(j))

The monthly and annual quantities that are handled in the facility, and the units of measure are listed in Table I-1 of this Section.

7. Process(es) that Produced the Waste
(22 CCR 66270.14(b)(19))

The used solvent is generated off-site by Safety-Kleen customers. Safety-Kleen provides parts degreasing/cleaning units ("parts cleaning machines") to its customers. The parts cleaning machine consists of a sink affixed to a container filled with Safety-Kleen solvent. Safety-Kleen also provides larger, vat-like equipment and provides parts cleaner service for customers who own their parts cleaning machines. This service provides solvent reclamation regardless of the model of machine. The used solvent is produced during degreasing/cleaning operations. Currently, approximately 90 % or more of the Safety-Kleen's customer base in California are Very Small Quantity Generators (VSQG's), with the remainder being either SQG's or LQG's.

8. Process(es) Used for Handling the Waste
(66270.13(i) & (j))
(40 CFR 270.13(i) & (j))

Safety-Kleen removes used solvent from its customers in DOT-approved containers and returns them to the Los Angeles Branch. The containerized used solvent is then transferred into a nominal 12,000-gallon underground storage tank (UST). The bulk used solvent in the UST is periodically picked up and taken via manifest and licensed hazardous waste transporter to a Safety-Kleen or another approved permitted TSDF. Containers used to collect the used solvent will be washed/cleaned with solvent (or water in case of aqueous-based solvent), and reused under special DOT exemption 49 CFR 173.28(b)(7). Container cleaning is performed by a drum washer unit in the Return and Fill (R&F) area. Any cleaning fluids are then transferred into the underground storage tanks via the drum washer. In some instances, used parts washer solvent may also remain in containers and shipped

directly off-site as transfer waste (e.g., this is true for non-mineral spirits based Qsol-220 and Qsol-300).

Safety-Kleen packages all wastes for transportation and storage under the guidelines for package applications and exceptions as found in 49 CFR 173. Each package meets the testing requirements under 49 CFR 178 as it applies to each individual package (unless exempted from this requirement).

9. Process Design Capacity and Units of Measure for Processes Used for Handling the Waste
(22 CCR 66270.13(i))
(40 CFR 270.13(i))

Safety-Kleen is limited as to how much waste can be stored at the facility by the capacity of the waste UST and the capacity of the drum storage areas. When the tanks are approximately 85% full (or less) a tanker truck is dispatched to the Branch and the waste is removed from the tank for transport. Parts Washer sludge from the drum washer will be placed in a DOT-approved container and shipped as containerized waste. See sections C, D, E, F, H, K below.

Safety-Kleen is a full-service parts washer service provider. Safety-Kleen provides the parts washer solvent and removes the used parts washer solvent. The size and color of the parts washer containers and labels are specific to the parts washer service. The only waste unloaded at the R&F Area is parts washer containers to be emptied. All other waste is unloaded at the container storage areas of the Branch. Consequently, it would be very difficult to empty any incompatible waste into the used solvent storage tanks.

10. Results of Chemical and Physical Analysis of the Waste
(22 CCR 66264.13, 66270.14(b)(2))
(40 CFR 264.13, 270.14(b)(2))

2019 AR data is included in Appendix III-4 for waste petroleum-based (mineral spirit) solvent, waste aqueous parts washer (APW) solvent, mineral spirit solvent and APW tank bottoms.

11. Documented waste data from a source other than operator's waste analysis
(22 CCR 66264.13(a)(2))
(40 CFR 264.13(a)(2))

All quantitative waste analyses are conducted by a California Environmental Laboratory Accreditation Program (ELAP) laboratory.

C. Waste Analysis Parameters
(22 CCR 66264.13(b)(1), 66270(14)(b)(3))
(40 CFR 264.13(b)(1), 270.13(b)(3))

1. **The parameters for which the waste will be analyzed** Wastes will be analyzed as a part of the AR program. Analytical methods are summarized in Table III-2. Laboratory parameter detection and reporting limits are determined by the procedures outlined in SW-846.

   Lab reporting limits are consistently below regulatory limits. Relationship between Safety-Kleen and 3rd party California accredited lab used is a formal relationship. Lab utilizes a *Laboratory Information Management System* (LIMS) that ensure Safety-Kleen samples are managed consistently (i.e., sample log in, lab methodologies assigned to samples, reporting requirements, etc.). Individual managing the testing program at Safety-Kleen ensures facilities submitting samples only send samples to this lab. If Safety-Kleen were to partner with a new lab in the future, Safety-Kleen would work with the lab to optimize analytical methods, etc. to ensure the same DQOs are met.

2. **Rational for choosing those parameters** - Parameters to be analyzed are for those contaminants which could reasonably be expected to be present in these waste streams based on historical data and Safety-Kleen's knowledge of its waste streams.

D. Waste Sampling and Sample Management
(22 CCR 66264.13(b)(1))
(40 CFR 264.13(b), Part 261, Appendix 1, 270.14(b)(3)

1. **The sampling procedures to be used to obtain a representative sample of the waste** – One grab sample from each permitted waste stream (either petroleum- or aqueous-based solvent) will be collected and analyzed for the parameters included in Table III-2.

2. **Required Personal Protective Equipment (PPE)** - All employees performing sampling must wear chemical resistant gloves, safety glasses, steel-toe boots, and chemical resistant aprons or chemically resistant clothing. A face shield may be used in lieu of safety glasses.

3. **Sampling method number and reference –** AR **s**ampling procedure is included in Appendix III-5.

4. **Sampling device** - Waste streams are sampled using single-use, disposable COLIWASAs (See Appendix III-5).

5. **Description of any method not approved by USEPA** - Not applicable. Safety-Kleen does not utilize any method not approved by USEPA.

6. **Storage instructions** – See Appendix III-5.

7. **Statistically representative sampling technique** – Safety-Kleen employs an AR process that utilizes statistically representative sampling consistent with SW-846.

8. **Practicality of statistically representative sampling -** Safety-Kleen provides solvent product to the customer, of which over 75% are small businesses. The customer signs a contractual agreement not to add foreign materials to the waste, and Safety-Kleen analyzes the solvent at our recycle centers according to their WAPs. For this reason, Safety-Kleen believes detailed sampling and analysis is not required at the service and accumulation centers. This WAP is applicable only to wastes that are terminated at the LA Branch. All other waste streams currently handled at the LA Branch are handled on a transfer basis.

9. **Number of sampling sites** – One grab sample form Waste UST is collected on an annual basis. Results of analysis is included in the AR process.

10. **Waste containment devices when sampling** – See Appendix III-5.

11. **Physical state(s)/layers of waste** – Spent parts washer is single-phase liquid that may contain a sludge layer at the bottom of the container or UST. The grab sample is collected from waste UST, and since a COLIWASA is used, a representative sample in liquid phase is collected that proportionally represents all waste layers.

12. **Precision and accuracy of sampling procedure** –

    Field duplicates are not performed in association with the AR Program. The population of potential sampling sources for core wastes is very large and very consistent. There are well over 400,000 generators using parts washer solvents, in much the same applications, washing automotive parts. The core wastes have been analyzed for TCLP characteristics since the EPA Method 1311 was promulgated in 1990. The AR database currently holds over 10 years-worth of data and demonstrates consistency amongst the individual samples. Each sample is in essence a duplicate of the others. Given the very large population and the consistency of the waste from generator to generator, within each waste type, field duplicates are not performed and are not felt to contribute any additional useful information.

E. Waste Analysis Procedures (22 CCR 66264.13(b)(2), 66270.14(b)(3)) (40 CFR 264.13(b)(2), 270.14(b)(3))

The Waste Analysis Procedures for the LA Branch are comprised of Qualitative/Visual Analysis (field testing) and Quantitative Analysis (lab analysis). These procedures have been developed in order to meet Waste Analysis Requirements as found in 40 CFR 264.13 and Title 22, Section 66264.13. This WAP also conforms to the requirements of U.S. EPA Publication PB94-963603, OSWER 9938.4-03 "Waste Analysis at Facilities That Generate, Treat, Store, and Dispose of Hazardous Wastes". The regulations require that before an owner or operator treats, stores, or disposes of any hazardous waste, a detailed chemical and physical analysis of a representative sample of the waste must be obtained. This analysis, at a minimum, must contain all of the information that must be known to treat, store, or dispose of the waste. The analysis may include data developed under 40 CFR 261 of the regulations, and existing published or documented data on the hazardous waste or on hazardous waste generated from similar processes.

Safety-Kleen services hundreds of thousands of customers and has operated for over 30 years. As such, Safety-Kleen has determined that the wastes generated are well known, and relatively homogeneous. Safety-Kleen evaluates the homogeneity of all waste streams through its Re-characterization Process. From this Recharacterization Process, which is a thorough statistical analysis of the Company's Waste Streams, Safety-Kleen determines the pervasive TCLP codes for each permitted Waste Stream. Therefore, the presence or absence of specific TCLP codes may change over time. The presence of small concentrations (ppm) of TC constituents does not affect the handling or management of the wastes at the Safety-Kleen Service and Accumulation Centers. This does not affect the handling or management standards required, or Safety-Kleen's ability to recycle the material and maintain the health and safety of workers and the environment. The Safety-Kleen Service and Accumulation Centers are permitted for the full range of TCLP codes that could be present in each Waste Stream. As stated above, the actual codes present in the wastes received may vary slightly each year. However, the permit includes the variety of waste codes that could be pervasive in each stream, and that can be safely managed at the facility.

The regulations also require an owner or operator of an off-site facility to inspect and, if necessary, analyze any hazardous waste received at the facility to determine whether it matches the identity of the waste specified on the manifest or shipping paper. This verification analysis is accomplished through the Qualitative/Visual Analysis (field evaluation). Chemical analysis or a Waste Material Profile will be performed if the waste does not meet the Qualitative/Visual Analysis Criteria.

If a particular drum of waste does not meet the acceptance criteria, the Safety-Kleen Service Representative will either sample the waste for testing at a California certified laboratory or perform a Waste Material Profile, to determine if the waste has been contaminated, or reject the waste. As an additional safeguard, Safety-Kleen requires all customers to inform Safety-Kleen of changes in waste processes or characteristics. As stated earlier, each customer

is required to sign a receipt document that assure the customer will inform Safety-Kleen of such changes. The customers waste will not be accepted if not signed. If Safety-Kleen obtains information either from the customer themselves or from the qualitative analysis indicating that the generator's process has changed to the extent that the composition of the waste stream accepted by Safety-Kleen may have changed, a Waste Material Profile or a chemical analysis of the waste will be performed.

1. **Qualitative/Visual Analysis -** In order to ensure that no materials are being added to the wastes, Safety-Kleen has developed the Qualitative/Visual Analysis (Q/V Analysis) procedures outlined in the following sections. These screening procedures include qualitative determinations for color and volume.

   A color different than that described below for each solvent may indicate the presence of a foreign material. Similarly, a volume measured in the drum at the time of pickup greater than the expected amount may indicate that something has been added to the solvent. Procedures have been developed to reject or further test the waste if it fails the acceptance criteria.

   The Safety-Kleen Service Representative, an employee of the Safety-Kleen Service Center, will perform Q/V Analysis at the customer location. Results of qualitative testing will be recorded on the Safety-Kleen's HH receipt (Appendix III-2). The Service Document will accompany the waste to the Branch and will be retained by the receiving facility as part of the facility operating record.

   If a particular drum of waste does not meet Q/V acceptance criteria, the Safety-Kleen service representative will notify the customer that it cannot accept the drum, and then either Perform a Waste Material Profile or sample the waste for laboratory testing, using the analyses listed in Table III-2 to determine if the waste has been contaminated.

   If the waste is sampled for further analysis, the service representative will take a sample of the waste and seal the container. The container is left at the customer location pending the analytical results of the laboratory tests.

   If the analysis of the Waste Material Profile or the laboratory analysis reveals that the sampled waste is not contaminated, Safety-Kleen will accept the waste from the customer. If the contamination is confirmed, the generator will be responsible for securing an alternate means of disposal. If either analysis reveals that the waste can be handled through Safety-Kleen's containerized waste service, the customer can elect to have Safety-Kleen handle the waste through that program (i.e. waste managed as a 10-day transfer waste that is being sent for other means of disposal (fuel blending, incineration, etc.)).

For any waste that fails the Q/V Analysis or is determined to be contaminated based on laboratory analysis, the Safety-Kleen Branch will interview the generator to determine the source of the contamination and ensure that further waste will not be contaminated (passing the QV acceptance criteria) prior to accepting additional waste from the generator.

Q/V Analysis requirements and their rationale are summarized in Tables III-3, and III-4 as described below.

a. **Volume -** The Safety-Kleen Service Representative knows that the original fill volume of solvent for each machine is constant and is well versed in how much this volume fills a given container (16-gal, 30-gal, 55-gal containers). If the volume of solvent exceeds that which was originally provided to the customer, the Safety-Kleen Service Representative will manage the waste as described in Section A (Waste Acceptance Procedures).

b. **Color -** The color of used Safety-Kleen parts washer solvent and used immersion cleaner is well known. The Safety-Kleen service representative will evaluate the color of wastes from these lines of business at the time of pick-up. Unused parts washer solvent has a clear or greenish tint. The more it is used, the darker it becomes until it is almost black. Therefore, if the used solvent does not appear to be green, brown, or black, the service representative will manage the waste as described in section A.

2. **Quantitative/Confirmation Analysis -** Due to Safety-Kleen's closed loop system, it is highly unlikely that wastes restricted from the facility would be accepted by mistake. Safety-Kleen facilities handle only a limited variety of wastes having well-defined physical and chemical properties. The majority of these wastes are generated from products originally supplied by Safety-Kleen. These permitted wastes are inspected by Safety-Kleen at the time of pickup for compliance with the acceptance criteria and subjected to Q/V Analysis.

The Quantitative Waste Analysis will consist of sampling, analysis, and inclusion of the samples in Safety-Kleen's national AR process. One representative sample from the waste UST will be taken of spent parts washer at the LA Branch each year. The sample will be analyzed for TCLP parameters as listed in Table III-2 as well as flash (only for petroleum-based solvent), and pH (for aqueous-based solvent). Safety-Kleen has developed a State-specific statistical verification of the AR using samples collected from its combined California RCRA Part B permitted facilities that have an identical WAP. This verification will be performed when requested by the Department.

The Safety-Kleen AR program is based on a statistical model, with application of technical knowledge after implementation of the model. Any change in waste codes from previous years is carefully reviewed by senior Safety-Kleen technical staff. This review includes trend analysis and considers recent regulatory developments by geographic area. Product trends are also considered. If a trend is identified, the AR program will be modified, to compensate for the trend. Compensatory steps could include:

- Assignment of additional/fewer waste codes based on geographic trends.
- Assignment of additional/fewer waste codes based on regulatory trends.
- Segregation of one AR waste stream into 2 or more streams due to product trends.
- Development of a regional-specific AR program separate from the National program.

F. Conditions Requiring & Frequency of Repeated Sampling and Analysis

1. The frequency with which the waste analysis will be repeated or reviewed for accuracy & timeliness (22 CCR 66264.13(a)(4) & (b)(4)) (40 CFR 264.13(a)(3) & (b)(4))

Waste analysis for each permitted waste stream will be performed once every year. Samples will be taken for each permitted waste stream and will be taken at the LA Branch.

2. Methods & frequency of re-testing for recharacterization of wastes: (22 CCR 66264.13(a)(4), (b)(4), 66270.14(b)(3)) (40 CFR 264.13(a)(3), (b)(4), 270.14(b)(3))

a. **Annual waste confirmation** – Safety-Kleen will conduct AR of the permitted waste streams.

b. **Qualitative testing** - Will be performed on each container from each generator for the waste types specified previously.

c. **Quantitative testing** - Will be performed on the waste UST from each waste stream (Petroleum- or aqueous-based solvent) as specified in previous sections.

d. **Additional Testing for containers** - Will be performed on each container if the container fails to meet acceptance criteria under the Qualitative Testing.

G. Additional Requirements for Off-Site Facilities (22 CCR 66264.13(a)(5), (b)(5), (c), 66270.14(b)(3)) (40 CFR 264.13 (a)(4), (b)(5), (c), 270.14(b)(3))

1. **The waste analyses that hazardous waste generators have agreed to supply -** If customers supply location-specific or company-specific laboratory data, then this solvent could be managed under the containerized waste services program and not bulked thru the Return and Fill Any analyses obtained must be from a California State-certified laboratory.

2. **The procedures to be used to inspect and analyze each load of hazardous waste received to ensure that it matches the waste identified on the manifest** - The service representative (driver) inspects each load of waste at the generator's facility for conformance with the acceptance criteria. Training to perform this testing is described in the training plan, Part VII. If the waste does not conform to these criteria, a Waste Material Profile may be completed or a sample collected for additional analyses to determine if the waste can be accepted. These procedures have been described previously.

3. **Shipment Screening Procedures -**

   a. **Manifest review** - Pickups at generators facilities are made under regulatory provisions for manifesting. Pickups are also made under regulatory provisions allowing the use of one "Consolidated Manifest" for the day's load. This manifest is examined when the truck returns to the facility at the end of each day.

   b. **Visual inspection** - Each shipment of waste is visually inspected by the service representative at the generator's facility, as described previously.

   c. **Frequency** - Each shipment is inspected at the generator's facility when picked up by the service representative.

   d. **Procedures for unacceptable shipments** - If a waste fails to meet the acceptance criteria described above and the additional analyses reveal that the waste contains constituents which render it unsuitable for recycling, Safety-Kleen will refuse to remove the waste from the generator's facility under their existing service agreement.

   e. **Key parameters for shipment analysis** - Analytical parameters are presented in Table III-2.

H. QA/QC Procedures (22 CCR 66264.13(b), 66270.14(b)(3), 66270.30(e)) (40 CFR 264.13(b), 270.14(b)(3), 270.30(e))

1. **Goals of QA/QC** - The ultimate goal of the analytical QA/QC program is to ensure that materials of known, acceptable quality are handled by the facility or sent to the recycle center or to other waste management facilities as appropriate. All data generated is technically and legally defensible. To achieve this goal, the QA/QC program contains procedures to ensure that analytical data is representative of the waste streams managed at the facility.

2. **Intended use and quantity of data to be gathered** - The intended use of the analytical data is to determine the characteristics of wastes managed at the facility, and to reconfirm these characteristics on an annual basis; and confirm the identity and characteristics of wastes sent to the recycle center.

3. **Acknowledgement that QA/QC procedures will be followed as described in specific test methods in SW-846** – Field QA/QC samples such as field, trip, and equipment blanks are not performed in association with the AR Program. Due to the nature of the waste matrices, these QA/QC samples would not provide useful or relevant information. Unlike groundwater monitoring where the matrix is essentially clean and contaminant free, used parts washer solvents are full of organic solvents that would inherently contaminate the field, trip, and equipment blanks. In addition to the basic organic nature of the parts washer solvents, it is known in advance that nearly all the waste solvents contain regulated waste (e.g., perchloroethylene). Field QA/QC samples would only result in solvent contaminated blanks, which may or may not indicate the presence regulated waste parameters that were already known to be present in the waste samples. Since, no additional useful information would be obtained through the implementation of Field QA/QC samples, they are not included in the AR Program.

   Safety-Kleen will only utilize State of California Certified Laboratories to ensure that the QA/QC procedures at the laboratory are acceptable to the Department. Additional rationales for omitting these QA/QC samples are:

   A. bulk spent parts washer is well established as hazardous waste by several decades of laboratory analysis. Even if a non-hazardous waste container is emptied in waste UST, the mixture is managed as a hazardous waste.

   B. even with the year-to-year minor variations in constituents, the hazardous waste constituents identified have also been established by the same extensive analytical history.

   C. the hazardous waste constituents are present in very low concentrations typically just over the part-per-million regulatory threshold.

D. all the hazardous waste constituents that have been found in the AR would not require a change in the waste handling practices.

E. the samples are a part of a much larger data pool; the recharacterization is not altered by one data point.

Management of exception, sample results that fall outside the acceptable values are of two types:

A. An individual sample that does not conform to the waste history and is above regulatory levels. In this situation Safety-Kleen will investigate. Based on the results of the investigation the waste may be re-sampled or if appropriate, other actions may be taken such as moving the customer to a different type of service (i.e. industrial waste services that require an individual profile).

4. **Chain of custody procedures -** QA/QC is also controlled through the use of specific Chain of Custody procedures. An example of a Safety-Kleen Chain of Custody document, required for all samples, is provided as Appendix III-6.

a. **Labeling and seals** - All sample containers will be labeled with the sample number, generator's name and address or facility name and address, waste type, date of sample collection and name of collector. Sample container closures will be sealed with a strip of adhesive tape or other adhesive seal, signed by the sample collector, so that the container cannot be opened without breaking the seal.

b. **Field log book** - All sample collectors will record the information described in subsection "a" above, and will maintain this information as part of the permanent operating record of the facility.

c. **Receipt and logging of samples by lab personnel** - Sample receipt and logging procedures will be those required for California certified laboratories.

d. **Chain of Custody records** - Safety-Kleen will maintain chain of custody records showing sample number, date sampled and sample collector. One copy of the chain of custody record will be submitted to the laboratory with the sample and a copy will be kept at the facility as part of the permanent operating record. An example of a Safety-Kleen Chain of Custody document is included as Appendix H.

e. **Sample Analysis Request Sheet** - A sample analysis request sheet will not be required. All sampling will be performed as referenced in Table III-2.

f. **Method of Containment and Preservation** - Samples will be contained in glass jars with Teflon-lined lids, or in other suitable

containers that are compatible with the waste. Samples will be kept cool until delivery to the laboratory.

5. **Laboratory aspects of chain of custody** - For annual waste confirmation, Safety-Kleen will use California Certified laboratories, which have stringent QA/QC procedures. If analysis is performed because a waste failed the qualitative and quantitative analysis Safety-Kleen will either 1) sample the waste for testing using the additional analyses described in Table III-2, to determine whether the waste has been contaminated; 2) perform a Waste Material Profile or 3) reject the waste.

6. **Documentation that lab equipment is inspected, maintained and serviced periodically** – Only California Certified laboratories will be utilized. Equipment inspection, maintenance, and service are addressed in their specific certification.

7. **The frequency with which the waste analysis will be repeated for accuracy & timeliness**
(22 CCR 6624.13(a)(4) & (b)(4), 66270.14(b)(3))
(40 CFR 264.13(a)(3), & (b)(4), 270.14(b)(3))

   a. **Waste confirmation** - Waste sampling and analysis will occur once a year.

   b. **Qualitative testing** - Will be performed on each container from each generator for the waste types specified previously.

   c. **Quantitative testing** - Will be performed on the core waste streams (spent petroleum- or aqueous-based solvent for LA Branch). A container from each core waste stream per Safety-Kleen permitted branch/AC will sampled as specified in previous sections.

   d. **Additional Testing** - Will be performed on each container that fails to meet acceptance criteria for qualitative or quantitative testing.

8. **Wastes analyzed outside of the facility**
(H&SC 25198; 22 CCR 66264.13(b)(5), 66270.14(b)(3))
(40 CFR 264.13(b)(5), 270.14(b)(3))

   Commercial chemical laboratories utilized by Safety-Kleen must have a valid California ELAP accreditation.

9. **For all facilities, describe methods to ensure that the waste analysis plan will be kept up to date** - This WAP will be modified when a new waste stream is to be terminated at the service center. The Waste Analysis Plan will also be modified when the waste analysis procedures fail (i.e., EPA guidelines changes). All revisions will be subject to prior approval by the Department of Toxic Substances Control (DTSC).

I. Waste Analysis Requirements Pertaining to Land Disposal Restrictions (66268.7, 66270.14(b)(3)) (40 CFR 264.13(b)(6), 268.7, 270.14(b)(3))

All of the permitted waste streams received and stored by Safety-Kleen at the facility are to be treated/recycled at approved Safety-Kleen recycle centers or other authorized treatment facilities. The drum washer sediment that is generated at the facility is drummed and shipped to a Safety-Kleen or Clean Harbors facility for reclamation or treatment (e.g., thermal destruction/incineration). Therefore, Safety-Kleen does not dispose of any hazardous wastes at the service center and does not send any wastes to land disposal facilities. Consequently, Safety-Kleen is not required to certify that hazardous wastes that are restricted from land disposal are below treatment standards. The following sections discuss how Safety-Kleen determines the appropriate Land Disposal Restrictions (LDR) classification and treatment standard and how LDR notification requirements will be met.

1. Waste Characterization - Due to the nature of its business, Safety-Kleen receives wastes that are untreated and that are assumed to exceed the LDR treatment standards. For the Safety-Kleen parts washer line of business, the hazardous constituents of the wastes are known, thus the hazardous waste codes and treatment standards are known. The rationale for the selection of the LDR treatment standards are provided below.

a. Wastes with Treatment Standards- Spent petroleum-based parts washer solvent may include D001 code since this waste contains high levels of organics, Safety-Kleen assumes that all D001 wastes will contain 10 percent total organic carbon (TOC). The technology-based standards for these wastewaters are "RORGS", or recovery of organics. Safety-Kleen may also generate or store wastes that may be classified as D006/D008 (drum washer solvent sediment). The treatment standards for these wastes are 1.0 mg/L, and 5.0 mg/L respectively. However, it should be noted that this waste is always recycled thru distillation recovery at a Safety-Kleen recycle center (e.g., Safety-Kleen – Dolton, IL), or another approved recycling facility. For CWS, waste LDRs may be applicable based on waste prequal or waste profile.

b. Waste streams that are not be subjects to LDRs are those that are deemed to be nonhazardous.

2. Notification and certification requirements (22 CCR 66268.7, 66268.8, 66270.14(b)(19)) (40 CFR 268.7, 268.8)

For all waste streams terminated at this facility, in accordance with 40 CFR 268.7, Safety-Kleen will provide to the recycle centers and require from its regulated customer's notification/certification for wastes banned from landfills as follows:

- Special forms for each regularly handled waste types; or
- A general form that must be completed for unique or non-standard waste streams.

a. Retention of generator notices and certifications - The notice is required paperwork for all Safety-Kleen waste types. The notices and certifications provided by regulated customers must be reviewed for correctness and be kept on file at the service center for at least three years as part of the operating record. In addition, certification must be provided to the customer and the service center that the wastes have been properly managed. Shipments lacking the proper Notice will not be accepted by any Safety-Kleen facility. When a shipment with the proper Notice is received, the Notice is kept in the files of the receiving facility with the manifest or with the pre-print if a manifest is not used.

b. Notification and certification for wastes to be further managed - All wastes are delivered to an approved Safety-Kleen recycling facility. Therefore, notification and certification for wastes to be further managed are not applicable. For CWS, waste LDRs may be applicable based on waste prequal or waste profile.

c. Additional notification and certification requirements for treatment facility - Not applicable. This facility is not a treatment facility.

d. Additional notification and certification requirements for disposal facilities - Not applicable. This facility is not a disposal facility.

e. Notification and certification requirements pertaining to landfill and surface impoundment disposal restrictions - Not applicable. This facility is not a landfill.

3. Additional requirements pertaining to the storage of restricted wastes – Not applicable.

4. Additional requirements for treatment facilities. Not applicable. This facility is not a treatment facility.

5. Additional requirements for land disposal facilities - Not applicable. This facility is not a disposal facility.

J. Waste Analysis Requirements for Wastes to be Incinerated During Operation and Performance Test.

(22 CCR 66264.13(b)(6), 66264.341, 66270.14(b)(3) & (b)(19), 66270.19(c), 66270.62(b)(2))
(40 CFR 264.13(b)(6), 264.341, 27014(b)(3), 270.19(c), 270.62(b)(2))

Not applicable. This facility is not an incinerator.

K. Ignitable, Reactive and Incompatible Wastes

1. The methods to be used for ensuring compatibility of wastes with handling methods -

The only two wastes that are to be accepted under terminated manifests at the facility are the mineral spirits and aqueous-based parts washer solvents. These waste streams are compatible.

2. Waste compatibility with containers

a. Procedures for determining compatibility of a waste to a container
(22 CCR 66264.172, 66270.14(b)(19))
(40 CFR 264.172)

Safety-Kleen manages a limited number of waste streams, many of which originate from products that are supplied to its customers. Safety-Kleen has evaluated the chemical composition of these products and wastes using the procedures described in this waste analysis plan and has determined that the wastes are compatible with the containers in which they are stored.

b. Procedures for analyzing liquids that are collected in a storage area
(22 CCR 66264.175(b)(5), 66270.14(b)(19))
(40 CFR 264.175(b)(5))

All wastes kept at the facility are properly segregated with each other and are compatible with the containers in which they are stored. Safety-Kleen only stores a limited number of waste streams at the facility. Additionally, the compositions of these waste streams are well known due to the testing procedures stated in this Waste Analysis Plan. It is therefore unnecessary to analyze any spilled liquid collected in the storage area.

c. Procedures for analyzing ignitable or reactive containerized wastes
(22 CCR 662645.17, 66264.176, 66270.14(b)(9), 66270.15(b))

(40 CFR 264.17, 264.176, 270.15(c))

The only two wastes that are to be accepted under terminated manifests at the facility are the mineral spirits and aqueous-based parts washer solvents. Therefore, additional analyses to evaluate compatibility are not necessary.

d. **Procedures for determining compatibility of wastes to be placed in the same container** – The only waste that is opened at the facility is solvent waste, which is co-mingled in the underground storage tank. Compatibility with tanks is discussed below.

e. **Procedures for Determining Compatibility to Wastes Previously Held in Reused Containers that were Not Decontaminated** - The only containers that will be reused at the facility are drums containing used parts washer solvent. These are emptied and washed with the same solvent in a drum washer, then refilled with new solvent for delivery to customers. Because the only material ever placed in these drums is new or spent solvent there is no potential for contact with incompatible materials. If waste fails quantitative analysis and contamination is found, the solvent will not be emptied/ refilled at the facility.

f. **Procedures for Determining Compatibility to Other Wastes Stored Nearby** – All DOT compatibility storage requirements will be met while any waste is stored at the facility. The facility will follow the segregation standards set forth in 49 CFR §177.848 Segregation of hazardous materials.

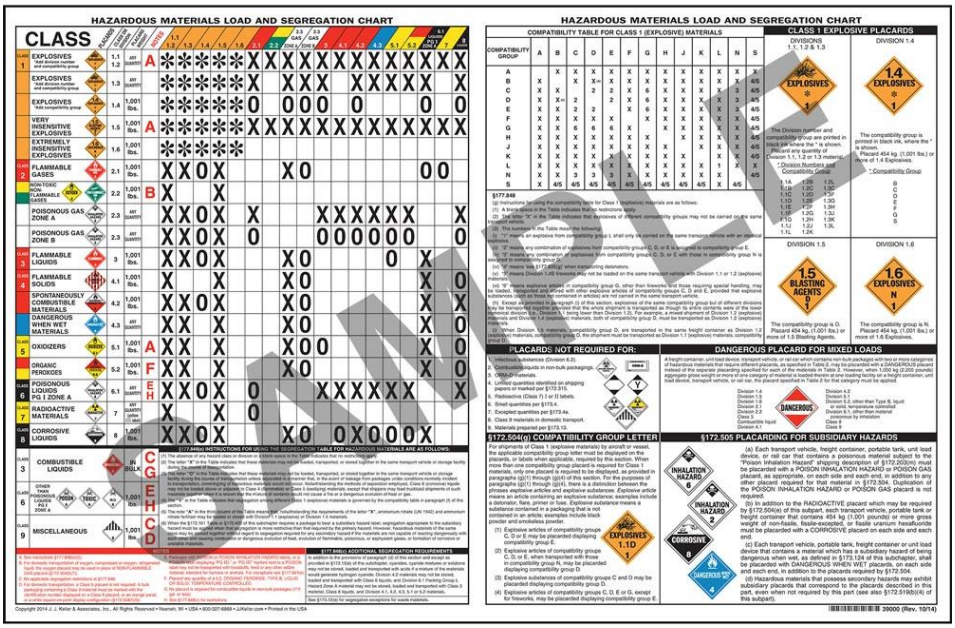

3. Waste compatibility with tanks.

a. Procedures for analyzing liquids collected in the collection area (22 CCR 66264.196(b), 66270.14(b)(19)) (40 CFR 264.196(b))

Because all wastes are analyzed according to the procedures described in this WAP and have known composition, additional analyses will not be required.

b. Procedures for determining compatibility of a waste to a tank (22 CCR 66264.194(A), 66270.16) (40 CFR 264.194(1), 66270.16)

The only waste stored in the underground tank is used parts washer solvent. This material has been analyzed and found to be compatible with the steel tank in which it is stored.

c. Procedures for analyzing ignitable or reactive wastes managed in tanks (22 CCR 66264.17, 66264.198, 66270.16(j)) (40 CFR 264.17, 264.198, 270(16)(j))

There is no reactive waste stored in the UST. While the mineral spirits parts washer solvent is currently not considered a D001 ignitable waste, there is always the

potential chance (although very small) that this waste could become D001 in the future based on the AR program testing.

d. Procedures for determining compatibility of a waste to any raw materials or other wastes potentially or previously held in the tank
(22 CCR 66264.17, 66264.199, 66270.14(b)(9), 66270.16(j))
(40 CFR 264.17, 264.199, 270.16(j))

The UST used for used parts washer solvent storage was new when installed and is dedicated to the storage of this product. Therefore, incompatible raw materials or wastes will never be stored in tanks.

Table III-1.
Estimated Monthly and Annual Amounts of Permitted Wastes Handled

Waste Description	Potential Federal Waste Codes	California Waste Codes	Estimated Monthly Amount (pounds)	Estimated Annual Amount (pounds)
Spent parts washer solvent • Mineral Spirits Solvent[1] • Aqueous Solvent	D001, D002 D004 through D011, D018, D039, D040	133, 134, 135, 213	250,000	3,000,000

[1] Solvent (petroleum-based) may be nonhazardous as a waste, depending on its use.

TABLE III-2
TEST METHODS

Spent Water Based Parts Washer Solvent			
Parameter	**Potential Federal or State Waste Code**	**Acceptable Range**	**Test Method**
pH	D002	>2 and < 12.5	SW846 9040/9045
Flash Point	D001	≥ 140°F	SW846 1010
Specific Gravity	N/A	1.0 to 1.2	ASTM D5057
Volatiles	D018	<0.5ppm	SW846 1311 SW846 8260
	D040	<0.5ppm	
	D039	<0.7ppm	
Metals	None D006	<1ppm	SW846 1311 SW846 6010/7470/7471
	D008	<5ppm	

TABLE III-2
TEST METHODS

Spent Petroleum Based Parts Washer Solvent			
Parameter	**Potential Federal or State Waste Code**	**Acceptable Range**	**Test Method**
pH	D002	>2 and < 12.5	SW846 9040/9045
Flash Point	D001	≥ 140°F	SW846 1010
Specific Gravity	N/A	0.75 to 0.85	ASTM D5057
Volatiles	D018	<0.5ppm	SW846 1311 SW846 8260
	D040	<0.5ppm	
	D039 CA Waste Code 213	<0.7ppm	
Metals	D006 D008	<1ppm <5ppm	SW846 1311 SW846 6010/7470/7471

Table III-3
Rationale for Selection of Parameter(s)

WMU Type	**Waste Parameter(s)**	**Media Type**	**Rationale for Selection**
Containers	pH	L, Sl, So[1]	Identify waste that may compromise container structural integrity and relevant health & safety precautions
	Flash Point	L, Sl, So	Identify appropriate storage condition (e.g. out of direct sunlight) and relevant health & safety precautions
	Specific Gravity	L, Sl, So	Identify relevant health &safety precautions
	TCLP VOC & Metals	L, Sl, So	Identify constituents(s) for compliance with the permit limits and for safe handling of the waste

Ref: EPA OSWER 9938.4-03 4/94 EPA Waste Analysis at Facilities That Generate, Treat, Store, And Dispose Of Hazardous Waste, Section 2.2 Rationale For Parameter Selection.

1- Liquid, Sludge, Solid

2-

TABLE III-4
QUALITIVE ACCEPTANCE CRITERIA

Waste	Criteria	Rationale
Spent/Used Parts Washer Solvent	Volume*: Volumes not to exceed product fill levels (16-gallon drums contains 9 gallons, and 30-gallon drums contain 17 gallons).*	Greater volume indicates potential addition of unknown waste.
	Color: Within color range of clear, light green to black.	Other color indicates potential addition of unknown waste

*volume subject to change by facility fill standards.

Sampling approach:

Safety-Kleen takes a combination of authoritative & statistical sampling approaches. Safety-Kleen utilizes:

Authoritative

1. generator knowledge;
2. supplying the material (e.g. Parts Washer Solvent);
3. many decades of analyzing 50 to 100 samples per year per waste stream;
4. selecting waste streams with low variability and the changes do not necessitate a change to management practices.

Statistical Model:

Safety-Kleen has had a statistical model that meets the requirement of SW-846 developed for a national recharacterization which includes the samples from the California permitted facilities. Safety-Kleen has previously provided the Department with copies of annual recharacterization including the statistical approach. Additional copies can be provided.

APPENDIX III-1

Safety Data Sheets for Mineral Spirits and Aqueous Parts Washer Solvents

Safety Data Sheet

Material Name: SAFETY-KLEEN PREMIUM SOLVENT (VIRGIN AND RECYCLED) **SDS ID: 82658**

Section 1 - PRODUCT AND COMPANY IDENTIFICATION

Material Name

SAFETY-KLEEN PREMIUM SOLVENT (VIRGIN AND RECYCLED)

Synonyms

Safety-Kleen Premium Gold Solvent; Safety-Kleen Continued Use Product Solvent (CUP); High Flash Degreasing Solvent; Parts Washer Solvent; Petroleum Distillates; Petroleum Naphtha; Naphtha, Solvent; Mineral Spirits

Product Use

Cleaning and degreasing metal parts. If this product is used in combination with other products, refer to the Safety Data Sheets for those products.

Restrictions on Use

None known.

MANUFACTURER

Safety-Kleen Systems, Inc.
2600 North Central Expressway
Suite 200
Richardson, TX 75080
www.safety-kleen.com
Phone: 1-800-669-5740
Emergency Phone #: 1-800-468-1760

SUPPLIER

Safety-Kleen Canada, Inc.
25 Regan Road
Brampton, Ontario, Canada L1A 1B2

Phone: 1-800-669-5740
Emergency # 1-800-468-1760

Issue Date

September 30, 2016

Supersedes Issue Date

June 28, 2016

Original Issue Date

January 26, 1995

Section 2 - HAZARDS IDENTIFICATION

Classification in accordance with paragraph (d) of 29 CFR 1910.1200.

Flammable Liquids - Category 4
Aspiration Hazard - Category 1
Specific Target Organ Toxicity - Single Exposure - Category 3 (central nervous system)

GHS Label Elements

Symbol(s)

Signal Word

Danger

Hazard Statement(s)

Combustible liquid.
May be fatal if swallowed and enters airways.
May cause drowsiness or dizziness.

Precautionary Statement(s)

Prevention

Keep away from heat, sparks, open flame, and hot surfaces - No smoking. Use only outdoors or in a well-ventilated area. Wear protective gloves and eye protection/face protection. Avoid breathing vapor or mist.

Response

In case of fire: Use Class B/C or Class A/B/C fire extinguisher, carbon dioxide, regular foam, dry chemical, water spray, or water fog for extinction. IF INHALED: Remove person to fresh air and keep at rest in a position comfortable for breathing. Call a POISON CENTER or doctor if you feel unwell. IF SWALLOWED: Immediately call a POISON CENTER/doctor. Do NOT induce vomiting.

Storage

Store in a well-ventilated place. Keep container tightly closed. Keep cool. Store locked up.

Disposal

Dispose of contents/container in accordance with local/regional/national/international regulations.

Other Hazards

None known.

Section 3 - COMPOSITION / INFORMATION ON INGREDIENTS

CAS	Component Name	Percent
64742-47-8	Petroleum distillates, hydrotreated light	100

Section 4 - FIRST AID MEASURES

Inhalation

IF INHALED: Remove person to fresh air and keep at rest in a position comfortable for breathing. Call a POISON CENTER or doctor/physician if you feel unwell.

Skin

IF ON SKIN: Wash with plenty of soap and water. Remove contaminated clothing and wash it before reuse. Get medical attention if irritation develops or persists.

Eyes

IF IN EYES: Rinse cautiously with water for several minutes. Remove contact lenses, if present and easy to do. Continue rinsing. Get medical attention if irritation develops or persists.

Ingestion

Aspiration hazard. IF SWALLOWED: Do NOT induce vomiting. If vomiting occurs, keep head lower than hips to help prevent aspiration. Immediately call a POISON CENTER or doctor/physician.

Most Important Symptoms/Effects

Acute

May be fatal if swallowed and enters airways. May cause drowsiness or dizziness.

Delayed

May cause damage to central nervous system.

Indication of any immediate medical attention and special treatment needed

IF exposed: Immediately call a POISON CENTER or doctor/physician. Treat symptomatically and supportively. Treatment may vary with condition of victim and specifics of incident. Call 1-800-468-1760 for additional information.

Section 5 - FIRE FIGHTING MEASURES

Extinguishing Media

Suitable Extinguishing Media

Media to use includes Class B/C or Class A/B/C fire extinguisher, carbon dioxide, regular dry chemical, foam, water spray, and water fog.

Unsuitable Extinguishing Media

Do not use high-pressure water streams.

Special Hazards Arising from the Chemical

Combustible liquid and vapor. The vapor is heavier than air. Vapors or gases may ignite at distant ignition sources and flash back. Do not allow run-off from fire-fighting to enter drains or water courses. Closed containers may rupture violently when heated. Empty containers may retain product residue including flammable/explosive vapors. Take precautionary measures against static discharge: May cause fire or explosion.

Hazardous Combustion Products

Decomposition and combustion materials may be toxic. Burning may produce carbon monoxide and other organic compounds.

Advice for firefighters

Wear full protective firefighting gear including self-contained breathing apparatus (SCBA) for protection against possible exposure.

Fire Fighting Measures

Keep away from ignition sources - No smoking. Keep unnecessary people away, isolate hazard area and deny entry. Move container from fire area if it can be done without risk. Cool containers with water spray until well after the fire is out. Fight fire from maximum distance or use unmanned hose holders or monitor nozzles. For massive fire, use unmanned hose holders or monitor nozzles; if this is impossible withdraw from area and let fire burn. Withdraw immediately in case of rising sound from venting safety device or any discoloration of tanks due to fire. Stay away from the ends of tanks. For tank, rail car or tank truck, evacuation radius: 800 meters (1/2 mile). Stay upwind and keep out of low areas. Dike for later disposal.

Section 6 - ACCIDENTAL RELEASE MEASURES

Personal Precautions, Protective Equipment and Emergency Procedures

Wear personal protective clothing and equipment, see Section 8.

Methods and Materials for Containment and Cleaning Up

Remove all sources of ignition. Do not touch or walk through spilled material. Stop leak if safe to do so. Wear personal protective clothing and equipment. Appropriate engineering controls: Keep unnecessary people away, isolate hazard area and deny entry. Ventilate the area. Avoid breathing vapor or mist. Use foam on spills to minimize vapors. Keep out of water supplies and sewers. Absorb with earth, sand or other non-combustible material and transfer to container. Use non-sparking tools. Large spills: Reduce vapors with water spray. Dike for later disposal.

Environmental Precautions

Avoid release to the environment.

Section 7 - HANDLING AND STORAGE

Precautions for Safe Handling

Keep away from heat, sparks and flame. Use personal protective equipment as required. When transferring product, trucks and tank cars should be grounded and bonded. Do not breathe vapor or mist. Use only outdoors or in a well-ventilated area. Avoid contact with eyes, skin and clothing. Do not eat, drink or smoke when using this product.

Conditions for Safe Storage, Including any Incompatibilities

Store in a well-ventilated place. Keep container tightly closed. Keep cool. Store locked up. Keep away from heat and ignition sources. Do not cut, puncture, or weld on or near this container. Empty containers may contain product residue.

Incompatible Materials

Avoid acids, alkalies, oxidizing agents, reducing agents, halogens.

Section 8 - EXPOSURE CONTROLS / PERSONAL PROTECTION

Component Exposure Limits

Petroleum distillates, hydrotreated light	**64742-47-8**
ACGIH:	100 ppm TWA (related to Stoddard solvent)
NIOSH:	350 mg/m^3 TWA (related to Stoddard solvent)
	1800 mg/m^3 Ceiling (15 minutes)
OSHA (US):	500 ppm TWA ; 2900 mg/m^3 TWA (Related to Stoddard solvent)
	100 ppm TWA (Related to Stoddard solvent); 525 mg/m^3 TWA (OSHA (Vacated))

ACGIH - Threshold Limit Values - Biological Exposure Indices (BEI)

There are no biological limit values for any of this product's components.

Engineering Controls

Provide general ventilation needed to maintain concentration of vapor or mist below applicable exposure limits. Where adequate general ventilation is unavailable, use process enclosures, local exhaust ventilation, or other engineering controls to control airborne levels below applicable exposure limits.

Individual Protection Measures, such as Personal Protective Equipment

Eye/face protection

Wear safety glasses. Additional protection like goggles, face shields, or respriators may be needed dependent upon anticipated use and concentrations of mists or vapors. Eye wash fountain and emergency showers are recommended. Contact lens use is not recommended.

Respiratory Protection

Use NIOSH-certified P- or R- series particulate filter and organic vapor cartridges when concentration of vapor or mist exceeds applicable exposure limits. Protection provided by air purifying respirators is limited. Do not use N-rated respirators. Selection and use of respiratory protective equipment should be in accordance in the USA with OSHA General Industry Standard 29 CFR 1910.134; or in Canada with CSA Standard Z94.4.

Glove Recommendations

Wear appropriate chemical resistant gloves. In case of skin contact: neoprene, nitrile, as well as similar materials in protection gloves; do not use natural rubber.

Protective Materials

Personal protective equipment should be selected based upon the conditions under which this material is used. A hazard assessment of the work area for PPE requirements should be conducted by a qualified professional pursuant to regulatory requirements. The following PPE should be considered the minimum required: Safety glasses, gloves, and lab coat or apron.

Section 9 - PHYSICAL AND CHEMICAL PROPERTIES

Appearance	Clear liquid	**Physical State**	Liquid
Odor	Mild ,hydrocarbon odor	**Color**	Colorless to pale yellow
Odor Threshold	30 ppm (based on Stoddard Solvent)	**pH**	Not applicable
Melting Point	-45 F (-43 C)	**Boiling Point**	350 F (177 C)
Boiling Point Range	Not available	**Freezing point**	Not available
Evaporation Rate	<0.1 (butyl acetate = 1)	**Flammability (solid, gas)**	Not available
Autoignition Temperature	480 F (249 C)(minimum)	**Flash Point**	148 F (64 C)
Lower Explosive Limit	0.7 VOL%	**Decomposition temperature**	Not available
Upper Explosive Limit	5 VOL%	**Vapor Pressure**	0.2 mm Hg (at 68 F)
Vapor Density (air=1)	5 (air = 1) (approximately)	**Specific Gravity (water=1)**	0.77 - 0.82 (at 60 F)
Water Solubility	Insoluble	**Partition coefficient: n-octanol/water**	Not available
Viscosity	Not available	**Solubility (Other)**	Not available
Density	6.4 - 6.7 lb/US gal	**VOC**	100 WT%; 6.4 to 6.7 LB/US gal; 770 to 800 g/l; As per 40 CFR Part 51.100(s); VOC Vapor Pressure: <1.0 mmHg @ 20°C; Product may or may not be considered photochemically reactive (100% by weight); Consult your state or local air district regulations for location specific information.
Molecular Weight	Not available		

Other Information

No additional information is available.

Section 10 - STABILITY AND REACTIVITY

Reactivity

No reactivity hazard is expected.

Chemical Stability

Stable at normal temperatures and pressure.

Possibility of Hazardous Reactions

Will not polymerize under normal temperature and pressure conditions.

Conditions to Avoid

Avoid heat, flames, sparks and other sources of ignition. Avoid contact with incompatible materials.

Incompatible Materials

Avoid acids, alkalies, oxidizing agents, reducing agents, halogens.

Hazardous decomposition products

Not applicable under normal conditions of use and storage. Reference to other sections: Section 5.

Thermal decomposition products

Burning may produce carbon monoxide and other organic compounds.

Section 11 - TOXICOLOGICAL INFORMATION

Information on Likely Routes of Exposure

Inhalation

May cause respiratory irritation, nausea, loss of appetite, headache, drowsiness, dizziness, disorientation, tremors, lung damage, convulsions, coma.

Skin Contact

May cause skin irritation.

Eye Contact

No information on significant adverse effects.

Ingestion

May cause drowsiness or dizziness, headache, loss of coordination, aspiration hazard.

Acute and Chronic Toxicity

Component Analysis - LD50/LC50

The components of this material have been reviewed in various sources and the following selected endpoints are published:

Petroleum distillates, hydrotreated light (64742-47-8)

Oral LD50 Rat >5000 mg/kg

Dermal LD50 Rabbit >2000 mg/kg

Inhalation LC50 Rat >5.2 mg/L 4 h

Immediate Effects

May cause central nervous system depression. Aspiration may result in lung damage, respiratory tract irritation, May cause skin irritation.

Delayed Effects

May cause damage to central nervous system.

Irritation/Corrosivity Data

May cause respiratory tract irritation and skin irritation.

Respiratory Sensitization

No information available for the product.

Dermal Sensitization

No information available for the product.

Component Carcinogenicity

None of this product's components are listed by ACGIH, IARC, OSHA, NIOSH, or NTP.

Germ Cell Mutagenicity

No information available for the product.

Tumorigenic Data

No data available

Reproductive Toxicity

No information available for the product.

Specific Target Organ Toxicity - Single Exposure

May cause central nervous system depression.

Specific Target Organ Toxicity - Repeated Exposure

May cause damage to central nervous system.

Aspiration hazard

May be fatal if swallowed and enters airways. May cause lung damage.

Medical Conditions Aggravated by Exposure

Individuals with pre-existing respiratory tract (nose, throat, and lungs), central nervous system, kidneys, and eye and/or skin disorders may have increased susceptibility to the effects of exposure.

Section 12 - ECOLOGICAL INFORMATION

Component Analysis - Aquatic Toxicity

According to the California Code of Regulations, a toxicity to aquatic life, specifically fish, is determined using an acute 96 hour bioassay. A material is non-hazardous if the LC50 is >500 mg/L. This product passed the bioassay and is considered non-hazardous.

Persistence and Degradability

No information available for the product.

Bioaccumulative Potential

This material is believed not to bioaccumulate.

Mobility

Expected to have high mobility in soil.

Other Toxicity

No additional information is available.

Section 13 - DISPOSAL CONSIDERATIONS

Disposal Methods

Dispose of in accordance with all applicable federal, state and local regulations. Regulations may also apply to empty containers. The responsibility for proper waste disposal lies with the owner of the waste. Contact Safety-Kleen regarding proper recycling or disposal. This product, if discarded, is not expected to be a characteristic or listed hazardous waste. Processing, use, or contamination by the user may change the waste code(s) applicable to the disposal of this product.

Component Waste Numbers

The U.S. EPA has not published waste numbers for this product's components

Section 14 - TRANSPORT INFORMATION

US DOT Information:

Non-Bulk Packages (less than or equal to 119 gallons): Not regulated. Shipping Name: Cleaning compounds (Petroleum naphtha) (Not US DOT regulated)

Bulk Packages

Shipping Name: COMBUSTIBLE LIQUID, N.O.S., (Petroleum naphtha)
Hazard Class: 3 **UN/NA #:** NA1993 **Packing Group:** III **Required Label(s):** 3

IATA Information:

UN#: Not regulated as a dangerous good

TDG Information:

UN#: Not regulated as a dangerous good

Additional information

Emergency Response Guide Number: 128: Reference: North American Emergency Response Guide Book.

Section 15 - REGULATORY INFORMATION

U.S. Federal Regulations

None of this products components are listed under SARA Sections 302/304 (40 CFR 355 Appendix A), SARA Section 313 (40 CFR 372.65), CERCLA (40 CFR 302.4), TSCA 12(b), or require an OSHA process safety plan.

SARA Section 311/312 (40 CFR 370 Subparts B and C)

Acute Health: yes **Chronic Health:** yes **Fire:** yes **Pressure:** no **Reactivity:** no

U.S. State Regulations

None of this product's components are listed on the state lists from MA, MN, NJ or PA

WARNING! This product can expose you to chemicals including benzene, dichlorobenzene, ethylbenzene, and naphthalene which are known to the State of California to cause cancer and benzene and toluene which are known to the State of California to cause birth defects or other reproductive harm. For more information go to www.P65Warnings.ca.gov.

Canada Regulations

This product has been classified in accordance with the criteria of the Controlled Products Regulations (CPR) and the SDS contains all of the information required by the CPR.

Canadian WHMIS Ingredient Disclosure List (IDL)

The components of this product are either not listed on the IDL or are present below the threshold limit listed on the IDL.

WHMIS Classification

B3; D2B

Component Analysis - Inventory

Petroleum distillates, hydrotreated light (64742-47-8)

US	CA
Yes	DSL

U.S. Inventory (TSCA)

TSCA: All the components of this substance are listed on or are exempt from the inventory.

Section 16 - OTHER INFORMATION

NFPA Ratings

Health: 1 Fire: 2 Reactivity: 0

Hazard Scale: 0 = Minimal 1 = Slight 2 = Moderate 3 = Serious 4 = Severe

Summary of Changes

Revision to meet Canadian WHMIS 2015. Clarification of language in Section 8, Protective Equipment.

Key / Legend

ACGIH - American Conference of Governmental Industrial Hygienists; BOD - Biochemical Oxygen Demand; C - Celsius; CA - Canada; CA/MA/MN/NJ/PA - California/Massachusetts/Minnesota/New Jersey/Pennsylvania*; CAS - Chemical Abstracts Service; CFR - Code of Federal Regulations (US); CERCLA - Comprehensive Environmental Response, Compensation, and Liability Act; CLP - Classification, Labelling, and Packaging; CPR - Controlled Products Regulations; DOT - Department of Transportation; DSL - Domestic Substances List; EPA - Environmental Protection Agency; F - Fahrenheit; IDL - Ingredient Disclosure List; IDLH - Immediately Dangerous to Life and Health; IMDG - International Maritime Dangerous Goods; LEL - Lower Explosive Limit; LLV - Level Limit Value; LOLI - List Of LIsts™ - ChemADVISOR's Regulatory Database; MAK - Maximum Concentration Value in the Workplace; MEL - Maximum Exposure Limits; NDSL – Non-Domestic Substance List (Canada); NFPA - National Fire Protection Agency; NIOSH - National Institute for Occupational Safety and Health; NJTSR - New Jersey Trade Secret Registry; NTP - National Toxicology Program; OSHA - Occupational Safety and

Health Administration; PEL- Permissible Exposure Limit; RCRA - Resource Conservation and Recovery Act; SARA - Superfund Amendments and Reauthorization Act; STEL - Short-term Exposure Limit; TDG - Transportation of Dangerous Goods; TLV - Threshold Limit Value; TSCA - Toxic Substances Control Act; TWA - Time Weighted Average; UEL - Upper Explosive Limit; UN/NA - United Nations /North American; US - United States; WHMIS - Workplace Hazardous Materials Information System (Canada).

Other Information

Disclaimer:

Supplier gives no warranty whatsoever, including the warranties of merchantability or of fitness for a particular purpose. Any product purchased is sold on the assumption the purchaser shall determine the quality and suitability of the product. Supplier expressly disclaims any and all liability for incidental, consequential or any other damages arising out of the use or misuse of this product. No information provided shall be deemed to be a recommendation to use any product in conflict with any existing patent rights.

Safety Data Sheet

Material Name: ArmaKleen 4 in 1 Cleaner – Cleaning Solution **SDS ID: 820070**

Section 1 - PRODUCT AND COMPANY IDENTIFICATION

Material Name
ArmaKleen 4 in 1 Cleaner – Cleaning Solution

Product Code
Not available.

Synonyms
Not available.

Product Use
Aqueous, alkaline cleaner that has been diluted with water for cleaning aluminum, magnesium, titanium, ferrous and non-ferrous alloys as well as plastic, glass, and composite materials. If this product is used in combination with other products, refer to the Safety Data Sheet for those products.

Restrictions on Use
For professional use only

Details of the supplier of the safety data sheet

MANUFACTURER	SUPPLIER	IMPORTER/DISTRIBUTOR
Church & Dwight	Safety-Kleen Systems, Inc.	Safety-Kleen Canada Inc.
The ArmaKleen™ Company	2600 North Central Expressway	25 Regan Road
469 North Harrison Street	Suite 200	Brampton, Ontario, Canada L1A 1B2
Princeton, NJ 08543	Richardson, TX 75080	Phone: 1-800-669-5740
Phone: (800) 332-5424	Phone: 1-800-669-5740	
www.churchdwight.com	www.safety-kleen.com	

Emergency Telephone Number
Medical: 1-888-234-1828 Chemical: 1-800-424-9300 (CHEMTREC)

Issue Date
March 6, 2017

Supersedes Issue Date
April 27, 2015

Original Issue Date
October 22, 2009

Section 2 - HAZARDS IDENTIFICATION

Classification in accordance with Schedule 1 of Canada's Hazardous Products Regulations (HPR) (SOR/2015-17) and paragraph (d) of 29 CFR 1910.1200 in the United States
None needed according to classification criteria

GHS Label Elements

Symbol(s)
None needed according to classification criteria

Signal Word
None needed according to classification criteria

Hazard Statement(s)
None needed according to classification criteria.

Precautionary Statement(s)

Prevention

None needed according to classification criteria.

Response

None needed according to classification criteria.

Storage

None needed according to classification criteria. Do not store below 40ºF.

Disposal

Dispose of contents/container in accordance with local/regional/national/international regulations.

Other hazards

Repeated exposure may cause skin dryness or cracking. Contact with heated material may cause serious thermal burns.

Section 3 - COMPOSITION / INFORMATION ON INGREDIENTS

CAS	Component Name	Percent
7732-18-5	Water	93-99
124-07-2	Octanoic Acid	0.25-0.27
68439-46-3	Alcohols, C9-11, ethoxylated	0.19-0.21
68987-81-5	Alcohols, C6-10, ethoxylated and proploxylated	0.14-0.16
61791-26-2	Amines, tallow, alkyl, ethoxylated	0.14-0.16

Section 4 - FIRST AID MEASURES

Inhalation

IF INHALED: Remove victim to fresh air and keep at rest in a position comfortable for breathing. Get medical attention, if needed.

Skin

IF ON SKIN: Remove contaminated clothing and shoes. Wash with plenty of soap and water. Get medical attention if needed.

Eyes

IF IN EYES: If irritation or redness from exposure to vapor or mist develops, move away from exposure and rinse cautiously with water for 5 minutes. Upon direct contact with liquid, immediately flush eyes with plenty of lukewarm water, holding eyelids apart, for 15 minutes. Remove contact lenses, if present and easy to do. Continue rinsing. Get medical attention, if needed.

Ingestion

IF SWALLOWED: Call a POISON CENTER or doctor/physician. Never give anything by mouth to an unconscious person.

Most Important Symptoms/Effects

Acute

May cause skin irritation. May cause eye irritation. May cause respiratory irritation.

Delayed

Repeated exposure may cause skin dryness or cracking.

Indication of any immediate medical attention and special treatment needed

Treat symptomatically and supportively.

Section 5 - FIRE FIGHTING MEASURES

Extinguishing Media

Suitable Extinguishing Media

Use extinguishing agents appropriate for surrounding fire.

Unsuitable Extinguishing Media

Do not use high-pressure water streams. Avoid using a direct stream of water. Directly spraying water or foam onto hot burning product may cause frothing.

Special Hazards Arising from the Chemical

Negligible fire hazard. Avoid friction, static electricity and sparks.

Hazardous Combustion Products

Burning may produce oxides of carbon.

Advice for firefighters

Use water spray to keep fire-exposed containers cool.

Fire Fighting Measures

A positive-pressure, self-contained breathing apparatus (SCBA) and full-body protective equipment are required for fire emergencies.

Special Protective Equipment and Precautions for Firefighters

Wear full protective fire fighting gear including self contained breathing apparatus (SCBA) for protection against possible exposure.

Section 6 - ACCIDENTAL RELEASE MEASURES

Personal Precautions, Protective Equipment and Emergency Procedures

Wear personal protective clothing and equipment, see Section 8. Avoid release to the environment.

Methods and Materials for Containment and Cleaning Up

Spilled product is slippery. Do not touch or walk through spilled product. Stop leak if you can do it without risk. Wear protective equipment and provide engineering controls as specified in SECTION 8: EXPOSURE CONTROLS/PERSONAL PROTECTION. Isolate hazard area. Keep unnecessary and unprotected personnel from entering. Ventilate area and avoid breathing vapor or mist. Contain spill away from surface water and sewers. Contain spill as a liquid for possible recovery, or sorb with compatible sorbent material and shovel with a clean, spark proof tool into a sealable container for disposal. Additionally, for large spills: Dike far ahead of liquid spill for collection and later disposal. There may be specific federal regulatory reporting requirements associated with spills, leaks, or releases of this product. Also see SECTION 15: REGULATORY INFORMATION.

Section 7 - HANDLING AND STORAGE

Precautions for Safe Handling

Keep away from heat, sparks and naked flames. Where flammable mixtures may be present, equipment safe for such locations should be used. Use clean tools and explosion-proof equipment. Use in a well ventilated area. Avoid contact with eyes Skin clothing shoes.

Conditions for Safe Storage, Including any Incompatibilities

Additional information: Storage. Keep container tightly closed when not in use and during transport. Store containers in a cool, dry place. Do not pressurize, cut, weld, braze, solder, drill, or grind containers. Keep containers away from flame, sparks, static electricity, or other sources of ignition. Empty product containers may retain product residue and can be dangerous. Do not store below 40ºF.

Incompatible Materials

Oxidizers, reducing agents, acids.

Section 8 - EXPOSURE CONTROLS / PERSONAL PROTECTION

Component Exposure Limits

Canada and ACGIH have not developed exposure limits for any of this product's components.

ACGIH - Threshold Limit Values - Biological Exposure Indices (BEI)

There are no biological limit values for any of this product's components.

Engineering Controls

Provide general ventilation needed to maintain concentration of vapor or mist below applicable exposure limits. Where adequate general ventilation is unavailable, use process enclosures, local exhaust ventilation, or other engineering controls to control airborne levels below applicable exposure limits.

Individual Protection Measures, such as Personal Protective Equipment

Eye/face protection

Wear safety glasses. Additional protection like goggles, face shields, or respirators may be needed dependent upon anticipated use and concentrations of mists or vapors. Eye wash fountain and emergency showers are recommended. Contact lens use is not recommended.

Respiratory Protection

A respiratory protection program which meets USA's OSHA General Industry Standard 29 CFR 1910.134 or Canada's CSA Standard Z94.4-M1982 requirements must be followed whenever workplace conditions warrant a respirator's use. Consult a qualified Industrial Hygienist or Safety Professional for respirator selection guidance.

Glove Recommendations

Where skin contact is likely, wear neoprene, nitrile, or equivalent protective gloves; use of natural rubber or equivalent gloves is not recommended.

Protective Materials

Personal protective equipment should be selected based upon the conditions under which this material is used. A hazard assessment of the work area for PPE requirements should be conducted by a qualified professional pursuant to regulatory requirements. The following PPE should be considered the minimum required: Safety glasses, gloves, and lab coat or apron.

Section 9 - PHYSICAL AND CHEMICAL PROPERTIES

Appearance	Clear, amber liquid	**Physical State**	Liquid
Odor	Mild	**Color**	Amber
Odor Threshold	Not available	**pH**	2.5% Solution: 10.4 5% Solution: 10.5 10% Solution: 11.0
Melting Point	0 °C (32	**Boiling Point**	100 °C (212ºF)
Boiling Point Range	Not available	**Freezing point**	Not available
Evaporation Rate	<1 (butyl acetate = 1)	**Flammability (solid, gas)**	Not available
Autoignition Temperature	Not available	**Flash Point**	>100 °C (212ºF)
Lower Explosive Limit	Not available	**Decomposition temperature**	Not available
Upper Explosive Limit	Not available	**Vapor Pressure**	17.5 mm Hg @ 20 °C (approximately)

Vapor Density (air=1)	<1 (Air.)	**Specific Gravity (water=1)**	1.005
Water Solubility	(complete)	**Partition coefficient: n-octanol/water**	Not available
Viscosity	Not available	**Solubility (Other)**	Not available
Density	0.9	**Physical Form**	Liquid.
Molecular Weight	Not available		

Volatile Organic Compounds (As regulated)	2.5% Solution	0.51 WT%; 0.044 LB/US gal; 5.25 g/L; As per 40 CFR Part 51.100(s)
	5.0% Solution	1.02 WT%; 0.088 LB/US gal; 10.5 g/L; As per 40 CFR Part 51.100(s) VOC Vapor Pressure @38°C = 0.644 mmHg
	10% Solution	2.04 WT%; 0.175 LB/US gal; 21g/L; As per 40 CFR Part 51.100(s) VOC Vapor Pressure @38°C = 0.734 mmHg
	Product Vapor Pressure @20°C = 17.5 mmHg; Product does not contain photochemically reactive solvents	

Other Information

No additional information is available.

Section 10 - STABILITY AND REACTIVITY

Reactivity

No reactivity hazard is expected.

Chemical Stability

Stable under normal temperatures and pressures.

Possibility of Hazardous Reactions

Will not polymerize.

Conditions to Avoid

Avoid heat, flames, sparks and other sources of ignition

Incompatible Materials

Oxidizers, acids, reducing agents.

Hazardous decomposition products

None under normal temperatures and pressures.

Thermal decomposition products

Oxides of carbon.

Section 11 - TOXICOLOGICAL INFORMATION

Information on Likely Routes of Exposure

Inhalation

May cause respiratory irritation.

Skin Contact

May cause skin irritation. Repeated exposure may cause skin dryness or cracking.

Eye Contact

May cause eye irritation.

Ingestion

Large amounts may cause gastrointestinal disturbances.

Acute and Chronic Toxicity

Component Analysis - LD50/LC50

The components of this material have been reviewed in various sources and no selected endpoints have been identified

Product Toxicity Data

Acute Toxicity Estimate

No data available.

Immediate Effects

May cause skin irritation. May cause eye irritation. May cause respiratory irritation.

Delayed Effects

Repeated exposure may cause skin dryness or cracking.

Irritation/Corrosivity Data

May cause skin irritation. May cause eye irritation. May cause respiratory irritation.

Respiratory Sensitization

No information available for the product.

Dermal Sensitization

No information available for the product.

Component Carcinogenicity

None of this product's components are listed by ACGIH, IARC, NTP, DFG or OSHA

Germ Cell Mutagenicity

No information available for the product.

Tumorigenic Data

No data available

Reproductive Toxicity

No information available for the product.

Specific Target Organ Toxicity - Single Exposure

No information on significant adverse effects.

Specific Target Organ Toxicity - Repeated Exposure

No information on significant adverse effects.

Aspiration hazard

No information available for the product.

Medical Conditions Aggravated by Exposure

Individuals with pre-existing respiratory tract (nose, throat, and lungs), eye, and/or skin disorders may have increased susceptibility to the effects of exposure.

Section 12 - ECOLOGICAL INFORMATION

Component Analysis - Aquatic Toxicity

No LOLI ecotoxicity data are available for this product's components

Persistence and Degradability

No information available for the product.

Bioaccumulative Potential

No information available for the product.

Mobility

No information available for the product.

Other Toxicity

No additional information is available.

Section 13 - DISPOSAL CONSIDERATIONS

Disposal Methods

The U.S; EPA has not published waste numbers for this product's components. Dispose in accordance with federal, state, provincial, and local regulations. Regulations may also apply to empty containers. The responsibility for proper waste disposal lies with the owner of the waste. Contact ArmaKleen regarding proper recycling or disposal.

Section 14 - TRANSPORT INFORMATION

US DOT Information: Not regulated for transport.
IATA Information: Not regulated for transport.
TDG Information: Not regulated for transport.

Section 15 - REGULATORY INFORMATION

Canada Regulations

CEPA - Priority Substances List

None of this product's components are on the list.

Ozone Depleting Substances

None of this product's components are on the list

Council of Ministers of the Environment - Soil Quality Guidelines

None of this product's components are on the list

Council of Ministers of the Environment - Water Quality Guidelines

None of this product's components are on the list

U.S. Federal Regulations

None of this products components are listed under SARA Sections 302/304 (40 CFR 355 Appendix A), SARA Section 313 (40 CFR 372.65), CERCLA (40 CFR 302.4), TSCA 12(b), or require an OSHA process safety plan.

SARA Section 311/312 (40 CFR 370 Subparts B and C)

Acute Health: No **Chronic Health:** No **Fire:** No **Pressure:** No **Reactivity:** No

Component Analysis - Inventory

No information is available.

Not listed under California Proposition 65.

Section 16 - OTHER INFORMATION

NFPA Ratings

Health: 1 Fire: 0 Reactivity: 0
Hazard Scale: 0 = Minimal; 1 = Slight; 2 = Moderate; 3 = Serious; 4 = Severe

Summary of Changes

Revision to comply with WHMIS 2015.

Key / Legend

ACGIH - American Conference of Governmental Industrial Hygienists; BOD - Biochemical Oxygen Demand; C - Celsius; CA - Canada; CA/MA/MN/NJ/PA - California/Massachusetts/Minnesota/New Jersey/Pennsylvania*; CAS - Chemical Abstracts Service; CFR - Code of Federal Regulations (US); CERCLA - Comprehensive Environmental Response, Compensation, and Liability Act; CLP - Classification, Labelling, and Packaging; CPR - Controlled Products Regulations; DOT - Department of Transportation; DSL - Domestic Substances List; EPA - Environmental Protection Agency; F - Fahrenheit; IDL - Ingredient Disclosure List; IDLH - Immediately Dangerous to Life and Health; IMDG - International Maritime Dangerous Goods; LEL - Lower Explosive Limit; LLV - Level Limit Value; LOLI - List Of LIsts™ - ChemADVISOR's Regulatory Database; MAK - Maximum Concentration Value in the Workplace; MEL - Maximum Exposure Limits; NDSL – Non-Domestic Substance List (Canada); NFPA - National Fire Protection Agency; NIOSH - National Institute for Occupational Safety and Health; NJTSR - New Jersey Trade

Secret Registry; NTP - National Toxicology Program; OSHA - Occupational Safety and Health Administration; PEL-Permissible Exposure Limit; RCRA - Resource Conservation and Recovery Act; SARA - Superfund Amendments and Reauthorization Act; STEL - Short-term Exposure Limit; TDG - Transportation of Dangerous Goods; TLV - Threshold Limit Value; TSCA - Toxic Substances Control Act; TWA - Time Weighted Average; UEL - Upper Explosive Limit; UN/NA - United Nations /North American; US - United States; WHMIS - Workplace Hazardous Materials Information System (Canada).

Other Information

This document has been prepared in accordance with the SDS requirements of the OSHA Hazard Communication Standard 29 CFR 1910.1200 and Canada's Hazardous Product Regulations (HPR)

Disclaimer:

User assumes all risks incident to the use of this product. To the best of our knowledge, the information contained herein is accurate. However, ArmaKleen assumes no liability whatsoever for the accuracy or completeness of the information contained herein. No representations or warranties, either expressed or implied, of merchantability, fitness for a particular purpose or of any other nature are made hereunder with respect to the information or the product to which the information refers. The data contained on this sheet apply to the product as supplied to the user.

APPENDIX III-2

Example of Hand-Held Receipt

Safety-Kleen Systems, Inc.

2600 N Central Expy, Suite 200
Richardson, TX 75080
CORPORATE: 800-669-5740
24 HR EMERGENCY: 800-468-1760 (Safety-Kleen)
5099288353

REFERENCE NBR.
CUSTOMER# AU28501 Autozone # 4105 77262528-1803233615
7306 N Division St SRVC WEEK: 2018-26
Spokane WA 99208-6528 SRVC DATE: 06/28/18
PHONE 509-484-2351

BILL TO CUSTOMER# BILL TO ADDRESS:
AU31497 Autozone
PO Box 2198
Memphis TN 38101-2198
PHONE 901-495-6949

PURCHASE ORDER# TAX EXEMPT#

PRODUCT/SERVICES

SERVICE/ PRODUCT		QTY	UNIT PRICE	TAX	TOTAL CHARGE
22558	DIY OIL 185 GALLONS TANK	1.000			
	S/N 4196 TAG T0002235XX00344661				
	SERVICE TERM 24 WEEK SCANNED YES				
66668	DO-IT-YOURSELF OIL SERVIC	150.000			
	SERVICE TERM 8 WEEK				
	HALOGEN / CLOR-D-TECT TEST RESULT PASS: PPM < 1000				

TOTAL SERVICE/PRODUCTS

TOTAL CHARGE
CREDITS
TOTAL DUE

UNPAID BALANCE THIS RECEIPT

If high risk source, rep. certifies that load specific PCB & Silicon testing have been completed prior to pumping this load.

GENERATOR STATUS
CESQG: Vehicle

Customer certifies that (i) the above-named materials are properly classified, packaged, marked and labeled, and are in proper condition for transportation according to the applicable regulations of the Department of Transportation (ii) no material change has occurred either in the characteristics of the waste/material or in the process generating the waste/material, and (iii) the above referenced Generator Status is correct. Customer agrees to pay the above charges and to be bound by the terms and conditions (1) set forth in (a) the General Terms and Conditions provided separately to Customer or (b) any SK agreement signed by Customer and SK, and (2) incorporated herein by reference. Unless otherwise indicated in the payment received section, SK is authorized to charge Customer's account for this transaction. If Customer fails to make payment when due, an amount equal to the lesser of (i) 1.5% per month (18% per annum) or (ii) the maximum amount allowed by law, will be added to all unpaid amounts outstanding. Customer certifies that the individual signing this Service Acknowledgement is duly authorized to sign and bind Customer. Customer acknowledges that it is responsible for maintaining its Generator Status and obtaining an EPA ID number if required by applicable law. The following provision is applicable to Safety-Kleen's parts cleaner and paint gun cleaner services: Customer

agrees that it will not introduce any substance into the solvent or aqueous cleaning solution, including without limitation any hazardous waste or hazardous waste constituent, except to the extent such introduction is incidental to the normal use of the machine. Customer further agrees that it will not clean parts/paint guns that have been contaminated with or otherwise introduce polychlorinated biphenyls (PCB's), herbicides, pesticides, dioxins or listed hazardous waste into the solvent or aqueous cleaning solution. Safety-Kleen has the capacity and is permitted to accept, store, and/or reclaim the spent parts washer solvent; paint thinners, solvents and paints generated by customer; or dry cleaning filter cartridges, powder, and still residues containing perchloroethylene, petroleum naphtha, or triflurotrichloroethane dry cleaning solvents. Customer agrees that it is responsible for properly classifying its waste streams as Used Oil or Nonhazardous Waste in accordance with the provision of 40 CFR 262.11 and applicable state laws. Customer agrees that it will not introduce any non-conforming substance into the SK Property, including, without limitation, any hazardous waste or hazardous waste constituent,(i.e., polychlorinated biphenyls ("PCBs"), herbicides, pesticides, dioxins, or listed hazardous wastes) except to the extent such introduction is incidental to the normal use of the SK Property. In the event of the introduction of such non-conforming hazardous waste, Customer agrees that it will be responsible for all costs and remediation expenses related to or arising from the proper management and disposal of the non-conforming waste, including the cost of equipment decontamination and subsequent disposal. Final invoicing will be based on the actual services provided, which may include additional charges for off specification waste and surcharges. Final invoice amount may be more than the amount listed on the printed receipt. If any legal action is commenced because of an alleged dispute, breach, default or misrepresentation, the Customer also agrees that the prevailing party will be entitled to recover reasonable attorney's fees and costs associated with the non-conforming contamination event. Safety-Kleen's failure to screen Customer's material or take a retain sample, in no way constitutes a waiver of Customer's obligation to properly classify its materials. Safety-Kleen relies on Customer's representations and Customer is responsible for informing Safety-Kleen of any process changes that may alter the characteristics of the materials provided. IN THE EVENT OF AN EMERGENCY CALL **24-HR NUMBER** 1-800-468-1760 (Safety-Kleen) A variable recovery fee that fluctuates with the DOE national average diesel price may be applied to your invoice. For more information regarding our recovery fee calculation please go to http://safety-kleen.com/ customer-service/environmental-fees/recovery-fees. Please note e-manifest fees applicable to this order may not be included in the total above and will be included in the final invoice or credit card statement. RECEIPT ONLY - THIS IS NOT AN INVOICE

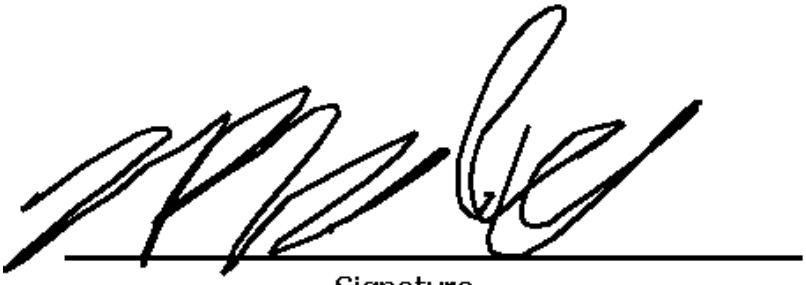

Signature

CUSTOMER / GENERATOR: mark

Signature

TRANSPORTER: James Amidon Branson

SHIPPING DOCUMENT

REFERENCE NBR.
CUSTOMER#/GENERATOR: AU28501 Autozone # 4105 77262528-1803233615
7306 N Division St
Spokane WA 99208-6528
PHONE 509-484-2351
GENERATOR USEPA ID. CESQG GENERATOR STATE
MANIFEST#: FORM CD: NR SHIP# 225833272
TRANSPORTER 1 TXR000081205
TRANSPORTER 2

US DOT DESCRIPTION (INCLUDING PROPER SHIPPING NAME, HAZARD CLASS, AND ID)

USED OIL
(NOT USDOT HAZARDOUS MATERIAL)

FEDERAL WASTE CODES NONE
STATE WASTE CODES
TOTAL CONT 1 TYPE TT WT/VOL G SKDOT 850
CNT#: 180628270091 SZ: BULK VOLUME CONTAINER QTY: 150 PROF# 150105

DESIGNATED FACILITY NAME/ADDRESS:
SAFETY KLEEN SYSTEMS INC
3808 N. SULLIVAN RD
BUILDING 12, STE. 1 WEST
SPOKANE WA 99216
TSD PHONE: 509-928-8353

FACILITY USEPA ID NO WAH000025242
FACILITY STATE ID NO

If high risk source, rep. certifies that load specific PCB & Silicon testing have been completed prior to pumping this load.

GENERATOR STATUS
CESQG: Vehicle

Customer certifies that (i) the above-named materials are properly classified, packaged, marked and labeled, and are in proper condition for transportation according to the applicable regulations of the Department of Transportation (ii) no material change has occurred either in the characteristics of the waste/material or in the process generating the waste/material, and (iii) the above referenced Generator Status is correct. Customer agrees to pay the above charges and to be bound by the terms and conditions (1) set forth in (a) the General Terms and Conditions provided separately to Customer or (b) any SK agreement signed by Customer and SK, and (2) incorporated herein by reference. Unless otherwise indicated in the payment received section, SK is authorized to charge Customer's account for this transaction. If Customer fails to make payment when due, an amount equal to the lesser of (i) 1.5% per month (18% per annum) or (ii) the maximum amount allowed by law, will be added to all unpaid amounts outstanding. Customer certifies that the individual signing this Service Acknowledgement is duly authorized to sign and bind Customer. Customer acknowledges that it is responsible for maintaining its Generator Status and obtaining an EPA ID number if required by applicable law. The following provision is applicable to Safety-Kleen's parts cleaner and paint gun cleaner services: Customer agrees that it will not introduce any substance into the solvent or aqueous cleaning solution, including without limitation any hazardous waste or hazardous waste constituent, except to the extent such introduction is incidental to the normal use of the machine. Customer further agrees that it will not clean parts/paint guns that have been contaminated with or otherwise introduce polychlorinated biphenyls (PCB's), herbicides, pesticides, dioxins or listed hazardous waste into the solvent or aqueous cleaning solution. Safety-Kleen has the capacity and is permitted to accept, store, and/or reclaim the spent parts washer solvent; paint thinners, solvents and paints generated by customer; or dry cleaning filter cartridges, powder, and still

residues containing perchloroethylene, petroleum naphtha, or triflurotrichloroethane dry cleaning solvents. Customer agrees that it is responsible for properly classifying its waste streams as Used Oil or Nonhazardous Waste in accordance with the provision of 40 CFR 262.11 and applicable state laws. Customer agrees that it will not introduce any non-conforming substance into the SK Property, including, without limitation, any hazardous waste or hazardous waste constituent,(i.e., polychlorinated biphenyls ("PCBs"), herbicides, pesticides, dioxins, or listed hazardous wastes) except to the extent such introduction is incidental to the normal use of the SK Property. In the event of the introduction of such non-conforming hazardous waste, Customer agrees that it will be responsible for all costs and remediation expenses related to or arising from the proper management and disposal of the non-conforming waste, including the cost of equipment decontamination and subsequent disposal. Final invoicing will be based on the actual services provided, which may include additional charges for off specification waste and surcharges. Final invoice amount may be more than the amount listed on the printed receipt. If any legal action is commenced because of an alleged dispute, breach, default or misrepresentation, the Customer also agrees that the prevailing party will be entitled to recover reasonable attorney's fees and costs associated with the non-conforming contamination event. Safety-Kleen's failure to screen Customer's material or take a retain sample, in no way constitutes a waiver of Customer's obligation to properly classify its materials. Safety-Kleen relies on Customer's representations and Customer is responsible for informing Safety-Kleen of any process changes that may alter the characteristics of the materials provided. IN THE EVENT OF AN EMERGENCY CALL **24-HR NUMBER** 1-800-468-1760 (Safety-Kleen) A variable recovery fee that fluctuates with the DOE national average diesel price may be applied to your invoice. For more information regarding our recovery fee calculation please go to http://safety-kleen.com/ customer-service/environmental-fees/recovery-fees. Please note e-manifest fees applicable to this order may not be included in the total above and will be included in the final invoice or credit card statement. RECEIPT ONLY - THIS IS NOT AN INVOICE

Signature

CUSTOMER / GENERATOR: mark

APPENDIX III-3

Example Waste Material Profile (APW)

safety-kleen
A Clean Harbors Company

WASTE MATERIAL PROFILE SHEET

Profile No. 782830

A. GENERAL INFORMATION

GENERATOR EPA ID #/REGISTRATION # ***CAR000225607*** GENERATOR NAME: ***Goodrich***

GENERATOR CODE (Assigned by Clean Harbors) ***UT6376*** CITY ***Brea*** STATE/PROVINCE ***CA*** ZIP/POSTAL CODE ***92821***

ADDRESS ***2727 E Imperial Hwy***

PHONE: **(714) 984-1475**

CUSTOMER CODE (Assigned by Clean Harbors) ***UT6376*** CUSTOMER NAME: ***Goodrich***

ADDRESS ***2727 E Imperial Hwy*** CITY ***Brea*** STATE/PROVINCE ***CA*** ZIP/POSTAL CODE ***92821***

B. WASTE DESCRIPTION

WASTE DESCRIPTION: ***Aqueous parts washer solution***

PROCESS GENERATING WASTE: **Cleaning parts**

IS THIS WASTE CONTAINED IN SMALL PACKAGING CONTAINED WITHIN A LARGER SHIPPING CONTAINER ? **No**

C. PHYSICAL PROPERTIES (at 25C or 77F)

PHYSICAL STATE
- SOLID WITHOUT FREE LIQUID
- POWDER
- MONOLITHIC SOLID
- [x] LIQUID WITH NO SOLIDS
- LIQUID/SOLID MIXTURE
- % FREE LIQUID
- % SETTLED SOLID
- % TOTAL SUSPENDED SOLID
- SLUDGE
- GAS/AEROSOL

NUMBER OF PHASES/LAYERS
- [x] 1 2 3

% BY VOLUME (Approx.)

TOP	***0.00***
MIDDLE	***0.00***
BOTTOM	***0.00***

VISCOSITY (If liquid present)
- [x] 1 - 100 (e.g. Water)
- 101 - 500 (e.g. Motor Oil)
- 501 - 10,000 (e.g. Molasses)
- > 10,000

COLOR
not provided

ODOR
- [x] NONE
- MILD
- STRONG

Describe:

BOILING POINT ºF (ºC)
- <= 95 (<=35)
- 95 - 100 (35-38)
- 101 - 129 (38-54)
- [x] >= 130 (>54)

MELTING POINT ºF (ºC)
- < 140 (<60)
- 140-200 (60-93)
- > 200 (>93)

TOTAL ORGANIC CARBON
- [x] <= 1%
- 1-9%
- >= 10%

FLASH POINT ºF (ºC)
- < 73 (<23)
- 73 - 100 (23-38)
- 101 -140 (38-60)
- 141 -200 (60-93)
- [x] > 200 (>93)

pH
- <= 2
- 2.1 - 6.9
- [x] 7 (Neutral)
- 7.1 - 12.4
- >= 12.5

SPECIFIC GRAVITY
- < 0.8 (e.g. Gasoline)
- 0.8-1.0 (e.g. Ethanol)
- [x] 1.0 (e.g. Water)
- 1.0-1.2 (e.g. Antifreeze)
- > 1.2 (e.g. Methylene Chloride)

ASH
- < 0.1
- 0.1 - 1.0
- 1.1 - 5.0
- 5.1 - 20.0
- > 20
- [x] Unknown

BTU/LB (MJ/kg)
- [x] < 2,000 (<4.6)
- 2,000-5,000 (4.6-11.6)
- 5,000-10,000 (11.6-23.2)
- > 10,000 (>23.2)

Actual:

D. COMPOSITION (List the complete composition of the waste, include any inert components and/or debris. Ranges for individual components are acceptable. If a trade name is used, please supply an MSDS. Please do not use abbreviations.)

CHEMICAL	MIN	--	MAX	UOM
ALCOHOLS C6-10, ETHOXYLATED	0.0500000	--	0.2500000	%
CADMIUM	4.0600000	--	4.0600000	PPM
FATTY ACIDS	0.0500000	--	0.2500000	%
POLY ETHOXYLATED ALCOHOLS	0.0500000	--	0.2500000	%
PROPYLENE GLYCOL ETHER	0.2500000	--	0.5000000	%
SILICIC ACID,SODIUM SALT	0.0500000	--	0.2500000	%
SODIUM CARBONATE	0.0500000	--	0.2500000	%
SODIUM HYDROXIDE	0.0500000	--	0.2500000	%
TALLOW AMINE, ETHOXYLATED	0.0500000	--	0.2500000	%
WATER	100.0000000	--	100.0000000	%

DOES THIS WASTE CONTAIN ANY HEAVY GAUGE METAL DEBRIS OR OTHER LARGE OBJECTS (EX., METAL PLATE OR PIPING >1/4" THICK OR >12" LONG, METAL REINFORCED HOSE >12" LONG, METAL WIRE >12" LONG, METAL VALVES, PIPE FITTINGS, CONCRETE REINFORCING BAR OR PIECES OF CONCRETE >3")? YES NO

If yes, describe, including dimensions:

DOES THIS WASTE CONTAIN ANY METALS IN POWDERED OR OTHER FINELY DIVIDED FORM? YES [x] NO

DOES THIS WASTE CONTAIN OR HAS IT CONTACTED ANY OF THE FOLLOWING; ANIMAL WASTES, HUMAN BLOOD, BLOOD PRODUCTS, BODY FLUIDS, MICROBIOLOGICAL WASTE, PATHOLOGICAL WASTE, HUMAN OR ANIMAL DERIVED SERUMS OR PROTEINS OR ANY OTHER POTENTIALLY INFECTIOUS MATERIAL? YES [x] NO

I acknowledge that this waste material is neither infectious nor does it contain any organism known to be a threat to human health. This certification is based on my knowledge of the material. Select the answer below that applies:

The waste was never exposed to potentially infectious material. YES NO

Chemical disinfection or some other form of sterilization has been applied to the waste. YES NO

I ACKNOWLEDGE THAT THIS PROFILE MEETS THE CLEAN HARBORS BATTERY PACKAGING REQUIREMENTS. YES NO

I ACKNOWLEDGE THAT MY FRIABLE ASBESTOS WASTE IS DOUBLE BAGGED AND WETTED. YES NO

SPECIFY THE SOURCE CODE ASSOCIATED WITH THE WASTE. ***G09*** SPECIFY THE FORM CODE ASSOCIATED WITH THE WASTE. ***W113***

E. CONSTITUENTS

Are these values based on testing or knowledge? ☑ Knowledge Testing

If based on knowledge, please describe in detail, the rationale applied to identify and characterize the waste material. Please include reference to Material Safety Data Sheets (MSDS) when applicable. Include the chemical or trade-name represented by the MSDS, and or detailed process or operating procedures which generate the waste.

MSDS and analytical

Please indicate which constituents below apply. Concentrations must be entered when applicable to assist in accurate review and expedited approval of your waste profile. Please note that the total regulated metals and other constituents sections require answers.

RCRA	REGULATED METALS	REGULATORY LEVEL (mg/l)	TCLP mg/l	TOTAL	UOM	NOT APPLICABLE
D004	ARSENIC	5.0				☑
D005	BARIUM	100.0				☑
D006	CADMIUM	1.0	*1.0000*	*4.0600000*	*PPM*	
D007	CHROMIUM	5.0				☑
D008	LEAD	5.0				☑
D009	MERCURY	0.2				☑
D010	SELENIUM	1.0				☑
D011	SILVER	5.0				☑

	VOLATILE COMPOUNDS	
D018	BENZENE	0.5
D019	CARBON TETRACHLORIDE	0.5
D021	CHLOROBENZENE	100.0
D022	CHLOROFORM	6.0
D028	1,2-DICHLOROETHANE	0.5
D029	1,1-DICHLOROETHYLENE	0.7
D035	METHYL ETHYL KETONE	200.0
D039	TETRACHLOROETHYLENE	0.7
D040	TRICHLOROETHYLENE	0.5
D043	VINYL CHLORIDE	0.2

	SEMI-VOLATILE COMPOUNDS	
D023	o-CRESOL	200.0
D024	m-CRESOL	200.0
D025	p-CRESOL	200.0
D026	CRESOL (TOTAL)	200.0
D027	1,4-DICHLOROBENZENE	7.5
D030	2,4-DINITROTOLUENE	0.13
D032	HEXACHLOROBENZENE	0.13
D033	HEXACHLOROBUTADIENE	0.5
D034	HEXACHLOROETHANE	3.0
D036	NITROBENZENE	2.0
D037	PENTACHLOROPHENOL	100.0
D038	PYRIDINE	5.0
D041	2,4,5-TRICHLOROPHENOL	400.0
D042	2,4,6-TRICHLOROPHENOL	2.0

	PESTICIDES AND HERBICIDES	
D012	ENDRIN	0.02
D013	LINDANE	0.4
D014	METHOXYCHLOR	10.0
D015	TOXAPHENE	0.5
D016	2,4-D	10.0
D017	2,4,5-TP (SILVEX)	1.0
D020	CHLORDANE	0.03
D031	HEPTACHLOR (AND ITS EPOXIDE)	0.008

OTHER CONSTITUENTS	MAX	UOM	NOT APPLICABLE
BROMINE			☑
CHLORINE			☑
FLUORINE			☑
IODINE			☑
SULFUR			☑
POTASSIUM			☑
SODIUM			☑
AMMONIA			☑
CYANIDE AMENABLE			☑
CYANIDE REACTIVE			☑
CYANIDE TOTAL			☑
SULFIDE REACTIVE			☑

HOCs

☑ NONE
< 1000 PPM
>= 1000 PPM

PCBs

☑ NONE
< 50 PPM
>=50 PPM

IF PCBS ARE PRESENT, IS THE WASTE REGULATED BY TSCA 40 CFR 761?

YES ☑ NO

ADDITIONAL HAZARDS

DOES THIS WASTE HAVE ANY UNDISCLOSED HAZARDS OR PRIOR INCIDENTS ASSOCIATED WITH IT, WHICH COULD AFFECT THE WAY IT SHOULD BE HANDLED?

YES ☑ NO (If yes, explain)

CHOOSE ALL THAT APPLY

DEA REGULATED SUBSTANCES
EXPLOSIVE
FUMING
☑ OSHA REGULATED CARCINOGENS
POLYMERIZABLE
RADIOACTIVE
REACTIVE MATERIAL
NONE OF THE ABOVE

safety-kleen
A Clean Harbors Company

Profile No. 782830

F. REGULATORY STATUS

☑ YES ☐ NO USEPA HAZARDOUS WASTE?

D006

☑ YES ☐ NO DO ANY STATE WASTE CODES APPLY?

141

Texas Waste Code ***OUTS113H***

☐ YES ☑ NO DO ANY CANADIAN PROVINCIAL WASTE CODES APPLY?

☐ YES ☑ NO IS THIS WASTE PROHIBITED FROM LAND DISPOSAL WITHOUT FURTHER TREATMENT PER 40 CFR PART 268?

LDR CATEGORY: ***Not subject to LDR***
VARIANCE INFO:

☐ YES ☑ NO IS THIS A UNIVERSAL WASTE?

☐ YES ☐ NO IS THE GENERATOR OF THE WASTE CLASSIFIED AS VERY SMALL QUANTITY GENERATOR (VSQG) OR A STATE EQUIVALENT DESIGNATION?

☐ YES ☐ NO IS THIS MATERIAL GOING TO BE MANAGED AS A RCRA EXEMPT COMMERCIAL PRODUCT, WHICH IS FUEL (40 CFR 261.2 (C)(2)(II))?

☐ YES ☑ NO DOES TREATMENT OF THIS WASTE GENERATE A F006 OR F019 SLUDGE?

☐ YES ☑ NO IS THIS WASTE STREAM SUBJECT TO THE INORGANIC METAL BEARING WASTE PROHIBITION FOUND AT 40 CFR 268.3(C)?

☐ YES ☑ NO DOES THIS WASTE CONTAIN VOC'S IN CONCENTRATIONS >=500 PPM?

☐ YES ☐ NO DOES THE WASTE CONTAIN GREATER THAN 20% OF ORGANIC CONSTITUENTS WITH A VAPOR PRESSURE >= .3KPA (.044 PSIA)?

☐ YES ☑ NO DOES THIS WASTE CONTAIN AN ORGANIC CONSTITUENT WHICH IN ITS PURE FORM HAS A VAPOR PRESSURE > 77 KPA (11.2 PSIA)?

☐ YES ☑ NO IS THIS CERCLA REGULATED (SUPERFUND) WASTE ?

☐ YES ☑ NO IS THE WASTE SUBJECT TO ONE OF THE FOLLOWING NESHAP RULES?

Hazardous Organic NESHAP (HON) rule (subpart G) Pharmaceuticals production (subpart GGG)

☐ YES ☑ NO IF THIS IS A US EPA HAZARDOUS WASTE, DOES THIS WASTE STREAM CONTAIN BENZENE?

YES NO Does the waste stream come from a facility with one of the SIC codes listed under benzene NESHAP or is this waste regulated under the benzene NESHAP rules because the original source of the waste is from a chemical manufacturing, coke by-product recovery, or petroleum refinery process?

YES NO Is the generating source of this waste stream a facility with Total Annual Benzene (TAB) >10 Mg/year?

What is the TAB quantity for your facility? Megagram/year (1 Mg = 2,200 lbs)

The basis for this determination is: Knowledge of the Waste Or Test Data Knowledge Testing

Describe the knowledge :

G. DOT/TDG INFORMATION

DOT/TDG PROPER SHIPPING NAME:

NA3082, HAZARDOUS WASTE, LIQUID, N.O.S., (CADMIUM), 9, PG III

H. TRANSPORTATION REQUIREMENTS

ESTIMATED SHIPMENT FREQUENCY ONE TIME WEEKLY MONTHLY QUARTERLY ☑ YEARLY OTHER

☑ **CONTAINERIZED**

1-1 CONTAINERS/SHIPMENT

STORAGE CAPACITY:
CONTAINER TYPE:

PORTABLE TOTE TANK BOX|CARTON|CASE
CUBIC YARD BOX ☑ DRUM
OTHER:
DRUM SIZE: ***30***

BULK LIQUID

GALLONS/SHIPMENT: ***0 Min -0 Max*** GAL.

BULK SOLID

SHIPMENT UOM: TON YARD

TONS/YARDS/SHIPMENT: ***0 Min - 0 Max***

I. SPECIAL REQUEST

COMMENTS OR REQUESTS:

ccss

GENERATOR'S CERTIFICATION

I certify that I am authorized to execute this document as an authorized agent. I hereby certify that all information submitted in this and attached documents is correct to the best of my knowledge.I also certify that any samples submitted are representative of the actual waste.If Clean Harbors discovers a discrepancy during the approval process, Generator grants Clean Harbors the authority to amend the profile, as Clean Harbors deems necessary, to reflect the discrepancy.

AUTHORIZED SIGNATURE	NAME (PRINT)	TITLE	DATE

APPENDIX IIII-4.A

2019 AR Data Summary for Waste Mineral Spirit Solvent

MATRIX	PARAMETER	LAB_SAMPLE_ID	RESULT	RANKED DATA	UNITS	QUALIFIER	REPORTING LIMIT	Uth VALUE	FACILITY	YEAR
Premium Solvent	1,1-Dichloroethene	180-58611-1	0.23	0.115	mg/L	U	0.23		Sacremento	2016
Premium Solvent	1,1-Dichloroethene	180-58744-1	0.25	0.125	mg/L	U	0.25		Albuquerque	2016
Premium Solvent	1,1-Dichloroethene	180-52527-1	0.25	0.125	mg/L	U	0.25		Boise	2016
Premium Solvent	1,1-Dichloroethene	180-53494-1	0.25	0.125	mg/L	U	0.25		Chandler	2016
Premium Solvent	1,1-Dichloroethene	180-58394-1	0.25	0.125	mg/L	U	0.25		Charlotte	2016
Premium Solvent	1,1-Dichloroethene	180-54771-1	0.25	0.125	mg/L	U	0.25		Chester	2016
Premium Solvent	1,1-Dichloroethene	180-58680-1	0.25	0.125	mg/L	U	0.25		Clackamas	2016
Premium Solvent	1,1-Dichloroethene	180-56685-1	0.25	0.125	mg/L	U	0.25		Farmington	2016
Premium Solvent	1,1-Dichloroethene	180-53961-1	0.25	0.125	mg/L	U	0.25		Kaukauna	2016
Premium Solvent	1,1-Dichloroethene	180-53963-1	0.25	0.125	mg/L	U	0.25		Kaukauna	2016
Premium Solvent	1,1-Dichloroethene	180-57964-1	0.25	0.125	mg/L	U	0.25		Omaha	2016
Premium Solvent	1,1-Dichloroethene	180-58138-1	0.25	0.125	mg/L	U	0.25		Tampa	2016
Premium Solvent	1,1-Dichloroethene	180-58732-1	0.25	0.125	mg/L	U	0.25		Tulsa	2016
Premium Solvent	1,1-Dichloroethene	180-58266-1	0.25	0.125	mg/L	U	0.25		Vinton	2016
Premium Solvent	1,1-Dichloroethene	180-54672-1	0.25	0.125	mg/L	U	0.25		Waukesha	2016
Premium Solvent	1,1-Dichloroethene	180-54673-1	0.25	0.125	mg/L	U	0.25		Waukesha	2016
Premium Solvent	1,1-Dichloroethene	180-54674-1	0.25	0.125	mg/L	U	0.25		Waukesha	2016
Premium Solvent	1,1-Dichloroethene	180-54675-1	0.25	0.125	mg/L	U	0.25		Waukesha	2016
Premium Solvent	1,1-Dichloroethene	180-54676-1	0.25	0.125	mg/L	U	0.25		Waukesha	2016
Premium Solvent	1,1-Dichloroethene	180-54677-1	0.25	0.125	mg/L	U	0.25		Waukesha	2016
Premium Solvent	1,1-Dichloroethene	180-54678-1	0.25	0.125	mg/L	U	0.25		Waukesha	2016
Premium Solvent	1,1-Dichloroethene	180-54679-1	0.25	0.125	mg/L	U	0.25		Waukesha	2016
Premium Solvent	1,1-Dichloroethene	180-54680-1	0.25	0.125	mg/L	U	0.25		Waukesha	2016
Premium Solvent	1,1-Dichloroethene	180-66650-1	0.25	0.125	mg/L	U	0.25		Albuquerque	2017
Premium Solvent	1,1-Dichloroethene	180-65687-1	0.25	0.125	mg/L	U	0.25		Archdale	2017
Premium Solvent	1,1-Dichloroethene	180-65693-1	0.25	0.125	mg/L	U	0.25		Avon	2017
Premium Solvent	1,1-Dichloroethene	180-64613-1	0.25	0.125	mg/L	U	0.25		Chandler	2017
Premium Solvent	1,1-Dichloroethene	180-70321-1	0.25	0.125	mg/L	U *	0.25		Chesapeake	2017
Premium Solvent	1,1-Dichloroethene	180-69209-1	0.25	0.125	mg/L	U	0.25		Clackamas	2017
Premium Solvent	1,1-Dichloroethene	180-65928-1	0.25	0.125	mg/L	U	0.25		Cohoes	2017
Premium Solvent	1,1-Dichloroethene	180-68416-1	0.25	0.125	mg/L	U	0.25		Farmington	2017
Premium Solvent	1,1-Dichloroethene	180-70383-1	0.25	0.125	mg/L	U *	0.25		Grand Island	2017
Premium Solvent	1,1-Dichloroethene	180-64751-1	0.25	0.125	mg/L	U	0.25		Kaukauna	2017

Premium Solvent	1,1-Dichloroethene	180-64752-1	0.25	0.125	mg/L	U	0.25		Kaukauna	2017
Premium Solvent	1,1-Dichloroethene	180-64753-1	0.25	0.125	mg/L	U	0.25		Kaukauna	2017
Premium Solvent	1,1-Dichloroethene	180-65696-1	0.25	0.125	mg/L	U	0.25		Lackawanna	2017
Premium Solvent	1,1-Dichloroethene	180-69242-1	0.25	0.125	mg/L	U	0.25		Oklahoma City	2017
Premium Solvent	1,1-Dichloroethene	180-69237-1	0.25	0.125	mg/L	U	0.25		Omaha	2017
Premium Solvent	1,1-Dichloroethene	180-70392-1	0.25	0.125	mg/L	U *	0.25		Raleigh	2017
Premium Solvent	1,1-Dichloroethene	180-68772-1	0.25	0.125	mg/L	U *	0.25		St Pauls	2017
Premium Solvent	1,1-Dichloroethene	180-65396-1	0.25	0.125	mg/L	U	0.25		Syracuse	2017
Premium Solvent	1,1-Dichloroethene	180-66253-1	0.25	0.125	mg/L	U *	0.25		Vinton	2017
Premium Solvent	1,1-Dichloroethene	180-68919-1	0.25	0.125	mg/L	U	0.25		Waukesha	2017
Premium Solvent	1,1-Dichloroethene	180-68924-1	0.25	0.125	mg/L	U	0.25		Waukesha	2017
Premium Solvent	1,1-Dichloroethene	180-68925-1	0.25	0.125	mg/L	U	0.25		Waukesha	2017
Premium Solvent	1,1-Dichloroethene	180-64796-1	0.25	0.125	mg/L	U	0.25		Wichita	2017
Premium Solvent	1,1-Dichloroethene	180-60141-1	0.25	0.125	mg/L	U	0.25		Avon	2017
Premium Solvent	1,1-Dichloroethene	180-60012-1	0.25	0.125	mg/L	U	0.25		Chesapeake	2017
Premium Solvent	1,1-Dichloroethene	180-59840-1	0.25	0.125	mg/L	U	0.25		Cohoes	2017
Premium Solvent	1,1-Dichloroethene	180-59969-1	0.25	0.125	mg/L	U	0.25		Lackawanna	2017
Premium Solvent	1,1-Dichloroethene	180-60895-1	0.25	0.125	mg/L	U	0.25		Archdale	2017
Premium Solvent	1,1-Dichloroethene	180-60618-1	0.25	0.125	mg/L	U	0.25	52	Barre	2017
Premium Solvent	1,1-Dichloroethene	180-81014-1	0.25	0.125	mg/L	U H	0.25		Albuquerque	2018
Premium Solvent	1,1-Dichloroethene	180-77400-1	0.25	0.125	mg/L	U	0.25		Archdale	2018
Premium Solvent	1,1-Dichloroethene	180-80742-1	0.25	0.125	mg/L	U	0.25		Avon	2018
Premium Solvent	1,1-Dichloroethene	180-81163-1	0.25	0.125	mg/L	U	0.25		Barre	2018
Premium Solvent	1,1-Dichloroethene	180-77125-1	0.25	0.125	mg/L	U	0.25		Boise	2018
Premium Solvent	1,1-Dichloroethene	180-77004-1	0.25	0.125	mg/L	U	0.25		Chandler	2018
Premium Solvent	1,1-Dichloroethene	180-77391-1	0.25	0.125	mg/L	U	0.25		Chester	2018
Premium Solvent	1,1-Dichloroethene	180-82330-1	0.25	0.125	mg/L	U *	0.25		Clackamas	2018
Premium Solvent	1,1-Dichloroethene	180-77710-1	0.25	0.125	mg/L	U	0.25		Cohoes	2018
Premium Solvent	1,1-Dichloroethene	180-81146-1	0.25	0.125	mg/L	U	0.25		Farmington	2018
Premium Solvent	1,1-Dichloroethene	180-77381-1	0.25	0.125	mg/L	U	0.25		Kaukauna	2018
Premium Solvent	1,1-Dichloroethene	180-77382-1	0.25	0.125	mg/L	U	0.25		Kaukauna	2018
Premium Solvent	1,1-Dichloroethene	180-77383-1	0.25	0.125	mg/L	U	0.25		Kaukauna	2018
Premium Solvent	1,1-Dichloroethene	180-77070-1	0.25	0.125	mg/L	U	0.25		Lackawanna	2018
Premium Solvent	1,1-Dichloroethene	180-80012-1	0.25	0.125	mg/L	U	0.25		Oklahoma City	2018

Premium Solvent	1,1-Dichloroethene	180-80014-1	0.25	0.125	mg/L	U	0.25	Oklahoma City	2018
Premium Solvent	1,1-Dichloroethene	180-80848-1	0.25	0.125	mg/L	U	0.25	Sacramento	2018
Premium Solvent	1,1-Dichloroethene	180-81823-1	0.25	0.125	mg/L	U	0.25	Salisbury	2018
Premium Solvent	1,1-Dichloroethene	180-76988-1	0.25	0.125	mg/L	U	0.25	Salt Lake City	2018
Premium Solvent	1,1-Dichloroethene	180-78677-1	0.25	0.125	mg/L	U *	0.25	Santa Ana	2018
Premium Solvent	1,1-Dichloroethene	180-78463-1	0.25	0.125	mg/L	U	0.25	St Pauls	2018
Premium Solvent	1,1-Dichloroethene	180-76683-1	0.25	0.125	mg/L	U	0.25	Syracuse	2018
Premium Solvent	1,1-Dichloroethene	180-79370-1	0.25	0.125	mg/L	U	0.25	Tampa	2018
Premium Solvent	1,1-Dichloroethene	180-78689-1	0.25	0.125	mg/L	U *	0.25	Vinton	2018
Premium Solvent	1,1-Dichloroethene	180-76265-1	0.25	0.125	mg/L	U	0.25	Waukesha	2018
Premium Solvent	1,1-Dichloroethene	180-76266-1	0.25	0.125	mg/L	U	0.25	Waukesha	2018
Premium Solvent	1,1-Dichloroethene	180-76267-1	0.25	0.125	mg/L	U	0.25	Waukesha	2018
Premium Solvent	1,1-Dichloroethene	180-76262-1	0.25	0.125	mg/L	U	0.25	Wichita	2018
Premium Solvent	1,1-Dichloroethene	180-72259-2	0.25	0.125	mg/L	U *	0.25	Chester	2018
Premium Solvent	1,1-Dichloroethene	180-72871-1	0.25	0.125	mg/L	U *	0.25	Sacramento	2018
Premium Solvent	1,1-Dichloroethene	180-71540-1	0.25	0.125	mg/L	U *	0.25	Salisbury	2018
Premium Solvent	1,1-Dichloroethene	180-71594-1	0.25	0.125	mg/L	U *	0.25	Santa Ana	2018
Premium Solvent	1,1-Dichloroethene	180-74277-1	0.25	0.125	mg/L	U *	0.25	Tallahassee	2018
Premium Solvent	1,1-Dichloroethene	180-53962-1	0.5	0.25	mg/L	U	0.5	Kaukauna	2016
Premium Solvent	1,1-Dichloroethene	180-56003-1	0.5	0.25	mg/L	U	0.5	St. Pauls	2016
Premium Solvent	1,1-Dichloroethene	180-55533-1	0.5	0.25	mg/L	U	0.5	Syracuse	2016
Premium Solvent	1,2-Dichloroethane	180-58611-1	0.23	0.115	mg/L	U	0.23	Sacremento	2016
Premium Solvent	1,2-Dichloroethane	180-58744-1	0.25	0.125	mg/L	U	0.25	Albuquerque	2016
Premium Solvent	1,2-Dichloroethane	180-52527-1	0.25	0.125	mg/L	U	0.25	Boise	2016
Premium Solvent	1,2-Dichloroethane	180-53494-1	0.25	0.125	mg/L	U	0.25	Chandler	2016
Premium Solvent	1,2-Dichloroethane	180-58394-1	0.25	0.125	mg/L	U	0.25	Charlotte	2016
Premium Solvent	1,2-Dichloroethane	180-54771-1	0.25	0.125	mg/L	U	0.25	Chester	2016
Premium Solvent	1,2-Dichloroethane	180-58680-1	0.25	0.125	mg/L	U	0.25	Clackamas	2016
Premium Solvent	1,2-Dichloroethane	180-56685-1	0.25	0.125	mg/L	U	0.25	Farmington	2016
Premium Solvent	1,2-Dichloroethane	180-53961-1	0.25	0.125	mg/L	U	0.25	Kaukauna	2016
Premium Solvent	1,2-Dichloroethane	180-53963-1	0.25	0.125	mg/L	U	0.25	Kaukauna	2016
Premium Solvent	1,2-Dichloroethane	180-57964-1	0.25	0.125	mg/L	U	0.25	Omaha	2016
Premium Solvent	1,2-Dichloroethane	180-58138-1	0.25	0.125	mg/L	U	0.25	Tampa	2016
Premium Solvent	1,2-Dichloroethane	180-58732-1	0.25	0.125	mg/L	U	0.25	Tulsa	2016

Premium Solvent	1,2-Dichloroethane	180-58266-1	0.25	0.125	mg/L	U	0.25	Vinton	2016
Premium Solvent	1,2-Dichloroethane	180-54672-1	0.25	0.125	mg/L	U	0.25	Waukesha	2016
Premium Solvent	1,2-Dichloroethane	180-54673-1	0.25	0.125	mg/L	U	0.25	Waukesha	2016
Premium Solvent	1,2-Dichloroethane	180-54674-1	0.25	0.125	mg/L	U	0.25	Waukesha	2016
Premium Solvent	1,2-Dichloroethane	180-54675-1	0.25	0.125	mg/L	U	0.25	Waukesha	2016
Premium Solvent	1,2-Dichloroethane	180-54676-1	0.25	0.125	mg/L	U	0.25	Waukesha	2016
Premium Solvent	1,2-Dichloroethane	180-54677-1	0.25	0.125	mg/L	U	0.25	Waukesha	2016
Premium Solvent	1,2-Dichloroethane	180-54678-1	0.25	0.125	mg/L	U	0.25	Waukesha	2016
Premium Solvent	1,2-Dichloroethane	180-54679-1	0.25	0.125	mg/L	U	0.25	Waukesha	2016
Premium Solvent	1,2-Dichloroethane	180-54680-1	0.25	0.125	mg/L	U	0.25	Waukesha	2016
Premium Solvent	1,2-Dichloroethane	180-66650-1	0.25	0.125	mg/L	U	0.25	Albuquerque	2017
Premium Solvent	1,2-Dichloroethane	180-65687-1	0.25	0.125	mg/L	U	0.25	Archdale	2017
Premium Solvent	1,2-Dichloroethane	180-65693-1	0.25	0.125	mg/L	U	0.25	Avon	2017
Premium Solvent	1,2-Dichloroethane	180-64613-1	0.25	0.125	mg/L	U	0.25	Chandler	2017
Premium Solvent	1,2-Dichloroethane	180-70321-1	0.25	0.125	mg/L	U	0.25	Chesapeake	2017
Premium Solvent	1,2-Dichloroethane	180-69209-1	0.25	0.125	mg/L	U	0.25	Clackamas	2017
Premium Solvent	1,2-Dichloroethane	180-65928-1	0.25	0.125	mg/L	U	0.25	Cohoes	2017
Premium Solvent	1,2-Dichloroethane	180-68416-1	0.25	0.125	mg/L	U	0.25	Farmington	2017
Premium Solvent	1,2-Dichloroethane	180-70383-1	0.25	0.125	mg/L	U	0.25	Grand Island	2017
Premium Solvent	1,2-Dichloroethane	180-64751-1	0.25	0.125	mg/L	U	0.25	Kaukauna	2017
Premium Solvent	1,2-Dichloroethane	180-64752-1	0.25	0.125	mg/L	U	0.25	Kaukauna	2017
Premium Solvent	1,2-Dichloroethane	180-64753-1	0.25	0.125	mg/L	U	0.25	Kaukauna	2017
Premium Solvent	1,2-Dichloroethane	180-65696-1	0.25	0.125	mg/L	U	0.25	Lackawanna	2017
Premium Solvent	1,2-Dichloroethane	180-69242-1	0.25	0.125	mg/L	U	0.25	Oklahoma City	2017
Premium Solvent	1,2-Dichloroethane	180-69237-1	0.25	0.125	mg/L	U	0.25	Omaha	2017
Premium Solvent	1,2-Dichloroethane	180-70392-1	0.25	0.125	mg/L	U	0.25	Raleigh	2017
Premium Solvent	1,2-Dichloroethane	180-68772-1	0.25	0.125	mg/L	U	0.25	St Pauls	2017
Premium Solvent	1,2-Dichloroethane	180-65396-1	0.25	0.125	mg/L	U	0.25	Syracuse	2017
Premium Solvent	1,2-Dichloroethane	180-66253-1	0.25	0.125	mg/L	U	0.25	Vinton	2017
Premium Solvent	1,2-Dichloroethane	180-68919-1	0.25	0.125	mg/L	U	0.25	Waukesha	2017
Premium Solvent	1,2-Dichloroethane	180-68924-1	0.25	0.125	mg/L	U	0.25	Waukesha	2017
Premium Solvent	1,2-Dichloroethane	180-68925-1	0.25	0.125	mg/L	U	0.25	Waukesha	2017
Premium Solvent	1,2-Dichloroethane	180-64796-1	0.25	0.125	mg/L	U	0.25	Wichita	2017
Premium Solvent	1,2-Dichloroethane	180-60141-1	0.25	0.125	mg/L	U	0.25	Avon	2017

Premium Solvent	1,2-Dichloroethane	180-60012-1	0.25	0.125	mg/L	U	0.25		Chesapeake	2017
Premium Solvent	1,2-Dichloroethane	180-59840-1	0.25	0.125	mg/L	U	0.25		Cohoes	2017
Premium Solvent	1,2-Dichloroethane	180-59969-1	0.25	0.125	mg/L	U	0.25		Lackawanna	2017
Premium Solvent	1,2-Dichloroethane	180-60895-1	0.25	0.125	mg/L	U	0.25		Archdale	2017
Premium Solvent	1,2-Dichloroethane	180-60618-1	0.25	0.125	mg/L	U	0.25	52	Barre	2017
Premium Solvent	1,2-Dichloroethane	180-81014-1	0.25	0.125	mg/L	U H	0.25		Albuquerque	2018
Premium Solvent	1,2-Dichloroethane	180-77400-1	0.25	0.125	mg/L	U	0.25		Archdale	2018
Premium Solvent	1,2-Dichloroethane	180-80742-1	0.25	0.125	mg/L	U	0.25		Avon	2018
Premium Solvent	1,2-Dichloroethane	180-81163-1	0.25	0.125	mg/L	U	0.25		Barre	2018
Premium Solvent	1,2-Dichloroethane	180-77125-1	0.25	0.125	mg/L	U	0.25		Boise	2018
Premium Solvent	1,2-Dichloroethane	180-77004-1	0.25	0.125	mg/L	U	0.25		Chandler	2018
Premium Solvent	1,2-Dichloroethane	180-77391-1	0.25	0.125	mg/L	U	0.25		Chester	2018
Premium Solvent	1,2-Dichloroethane	180-82330-1	0.25	0.125	mg/L	U	0.25		Clackamas	2018
Premium Solvent	1,2-Dichloroethane	180-77710-1	0.25	0.125	mg/L	U	0.25		Cohoes	2018
Premium Solvent	1,2-Dichloroethane	180-81146-1	0.25	0.125	mg/L	U	0.25		Farmington	2018
Premium Solvent	1,2-Dichloroethane	180-77381-1	0.25	0.125	mg/L	U	0.25		Kaukauna	2018
Premium Solvent	1,2-Dichloroethane	180-77382-1	0.25	0.125	mg/L	U	0.25		Kaukauna	2018
Premium Solvent	1,2-Dichloroethane	180-77383-1	0.25	0.125	mg/L	U	0.25		Kaukauna	2018
Premium Solvent	1,2-Dichloroethane	180-77070-1	0.25	0.125	mg/L	U	0.25		Lackawanna	2018
Premium Solvent	1,2-Dichloroethane	180-80012-1	0.25	0.125	mg/L	U	0.25		Oklahoma City	2018
Premium Solvent	1,2-Dichloroethane	180-80014-1	0.25	0.125	mg/L	U	0.25		Oklahoma City	2018
Premium Solvent	1,2-Dichloroethane	180-80848-1	0.25	0.125	mg/L	U	0.25		Sacramento	2018
Premium Solvent	1,2-Dichloroethane	180-81823-1	0.25	0.125	mg/L	U	0.25		Salisbury	2018
Premium Solvent	1,2-Dichloroethane	180-76988-1	0.25	0.125	mg/L	U	0.25		Salt Lake City	2018
Premium Solvent	1,2-Dichloroethane	180-78677-1	0.25	0.125	mg/L	U	0.25		Santa Ana	2018
Premium Solvent	1,2-Dichloroethane	180-78463-1	0.25	0.125	mg/L	U	0.25		St Pauls	2018
Premium Solvent	1,2-Dichloroethane	180-76683-1	0.25	0.125	mg/L	U	0.25		Syracuse	2018
Premium Solvent	1,2-Dichloroethane	180-79370-1	0.25	0.125	mg/L	U	0.25		Tampa	2018
Premium Solvent	1,2-Dichloroethane	180-78689-1	0.25	0.125	mg/L	U	0.25		Vinton	2018
Premium Solvent	1,2-Dichloroethane	180-76265-1	0.25	0.125	mg/L	U	0.25		Waukesha	2018
Premium Solvent	1,2-Dichloroethane	180-76266-1	0.25	0.125	mg/L	U	0.25		Waukesha	2018
Premium Solvent	1,2-Dichloroethane	180-76267-1	0.25	0.125	mg/L	U	0.25		Waukesha	2018
Premium Solvent	1,2-Dichloroethane	180-76262-1	0.25	0.125	mg/L	U	0.25		Wichita	2018
Premium Solvent	1,2-Dichloroethane	180-72259-2	0.25	0.125	mg/L	U	0.25		Chester	2018

Premium Solvent	1,2-Dichloroethane	180-72871-1	0.25	0.125	mg/L	U	0.25	Sacramento	2018
Premium Solvent	1,2-Dichloroethane	180-71540-1	0.25	0.125	mg/L	U	0.25	Salisbury	2018
Premium Solvent	1,2-Dichloroethane	180-71594-1	0.25	0.125	mg/L	U	0.25	Santa Ana	2018
Premium Solvent	1,2-Dichloroethane	180-74277-1	0.25	0.125	mg/L	U	0.25	Tallahassee	2018
Premium Solvent	1,2-Dichloroethane	180-53962-1	0.5	0.25	mg/L	U	0.5	Kaukauna	2016
Premium Solvent	1,2-Dichloroethane	180-56003-1	0.5	0.25	mg/L	U	0.5	St. Pauls	2016
Premium Solvent	1,2-Dichloroethane	180-55533-1	0.5	0.25	mg/L	U	0.5	Syracuse	2016
Premium Solvent	1,4-Dichlorobenzene	180-54674-1	0.11	0.11	mg/L	J	0.25	Waukesha	2016
Premium Solvent	1,4-Dichlorobenzene	180-58611-1	0.23	0.115	mg/L	U	0.23	Sacremento	2016
Premium Solvent	1,4-Dichlorobenzene	180-54678-1	0.12	0.12	mg/L	J	0.25	Waukesha	2016
Premium Solvent	1,4-Dichlorobenzene	180-58744-1	0.25	0.125	mg/L	U	0.25	Albuquerque	2016
Premium Solvent	1,4-Dichlorobenzene	180-52527-1	0.25	0.125	mg/L	U	0.25	Boise	2016
Premium Solvent	1,4-Dichlorobenzene	180-53494-1	0.25	0.125	mg/L	U	0.25	Chandler	2016
Premium Solvent	1,4-Dichlorobenzene	180-58394-1	0.25	0.125	mg/L	U	0.25	Charlotte	2016
Premium Solvent	1,4-Dichlorobenzene	180-54771-1	0.25	0.125	mg/L	U	0.25	Chester	2016
Premium Solvent	1,4-Dichlorobenzene	180-58680-1	0.25	0.125	mg/L	U	0.25	Clackamas	2016
Premium Solvent	1,4-Dichlorobenzene	180-56685-1	0.25	0.125	mg/L	U	0.25	Farmington	2016
Premium Solvent	1,4-Dichlorobenzene	180-53961-1	0.25	0.125	mg/L	U	0.25	Kaukauna	2016
Premium Solvent	1,4-Dichlorobenzene	180-53963-1	0.25	0.125	mg/L	U	0.25	Kaukauna	2016
Premium Solvent	1,4-Dichlorobenzene	180-57964-1	0.25	0.125	mg/L	U	0.25	Omaha	2016
Premium Solvent	1,4-Dichlorobenzene	180-58138-1	0.25	0.125	mg/L	U	0.25	Tampa	2016
Premium Solvent	1,4-Dichlorobenzene	180-58732-1	0.25	0.125	mg/L	U	0.25	Tulsa	2016
Premium Solvent	1,4-Dichlorobenzene	180-58266-1	0.25	0.125	mg/L	U	0.25	Vinton	2016
Premium Solvent	1,4-Dichlorobenzene	180-54672-1	0.25	0.125	mg/L	U	0.25	Waukesha	2016
Premium Solvent	1,4-Dichlorobenzene	180-54673-1	0.25	0.125	mg/L	U	0.25	Waukesha	2016
Premium Solvent	1,4-Dichlorobenzene	180-54675-1	0.25	0.125	mg/L	U	0.25	Waukesha	2016
Premium Solvent	1,4-Dichlorobenzene	180-54677-1	0.25	0.125	mg/L	U	0.25	Waukesha	2016
Premium Solvent	1,4-Dichlorobenzene	180-54680-1	0.25	0.125	mg/L	U	0.25	Waukesha	2016
Premium Solvent	1,4-Dichlorobenzene	180-66650-1	0.25	0.125	mg/L	U	0.25	Albuquerque	2017
Premium Solvent	1,4-Dichlorobenzene	180-65687-1	0.25	0.125	mg/L	U	0.25	Archdale	2017
Premium Solvent	1,4-Dichlorobenzene	180-65693-1	0.25	0.125	mg/L	U	0.25	Avon	2017
Premium Solvent	1,4-Dichlorobenzene	180-64613-1	0.25	0.125	mg/L	U	0.25	Chandler	2017
Premium Solvent	1,4-Dichlorobenzene	180-70321-1	0.25	0.125	mg/L	U	0.25	Chesapeake	2017
Premium Solvent	1,4-Dichlorobenzene	180-69209-1	0.25	0.125	mg/L	U	0.25	Clackamas	2017

Premium Solvent	1,4-Dichlorobenzene	180-65928-1	0.25	0.125	mg/L	U	0.25		Cohoes	2017
Premium Solvent	1,4-Dichlorobenzene	180-68416-1	0.25	0.125	mg/L	U	0.25		Farmington	2017
Premium Solvent	1,4-Dichlorobenzene	180-70383-1	0.25	0.125	mg/L	U	0.25		Grand Island	2017
Premium Solvent	1,4-Dichlorobenzene	180-64751-1	0.25	0.125	mg/L	U	0.25		Kaukauna	2017
Premium Solvent	1,4-Dichlorobenzene	180-64752-1	0.25	0.125	mg/L	U	0.25		Kaukauna	2017
Premium Solvent	1,4-Dichlorobenzene	180-64753-1	0.25	0.125	mg/L	U	0.25		Kaukauna	2017
Premium Solvent	1,4-Dichlorobenzene	180-69242-1	0.25	0.125	mg/L	U	0.25		Oklahoma City	2017
Premium Solvent	1,4-Dichlorobenzene	180-69237-1	0.25	0.125	mg/L	U	0.25		Omaha	2017
Premium Solvent	1,4-Dichlorobenzene	180-70392-1	0.25	0.125	mg/L	U	0.25		Raleigh	2017
Premium Solvent	1,4-Dichlorobenzene	180-68772-1	0.25	0.125	mg/L	U	0.25		St Pauls	2017
Premium Solvent	1,4-Dichlorobenzene	180-65396-1	0.25	0.125	mg/L	U	0.25		Syracuse	2017
Premium Solvent	1,4-Dichlorobenzene	180-66253-1	0.25	0.125	mg/L	U	0.25		Vinton	2017
Premium Solvent	1,4-Dichlorobenzene	180-68919-1	0.25	0.125	mg/L	U	0.25		Waukesha	2017
Premium Solvent	1,4-Dichlorobenzene	180-68924-1	0.25	0.125	mg/L	U	0.25		Waukesha	2017
Premium Solvent	1,4-Dichlorobenzene	180-68925-1	0.25	0.125	mg/L	U	0.25		Waukesha	2017
Premium Solvent	1,4-Dichlorobenzene	180-64796-1	0.25	0.125	mg/L	U	0.25		Wichita	2017
Premium Solvent	1,4-Dichlorobenzene	180-60141-1	0.25	0.125	mg/L	U	0.25		Avon	2017
Premium Solvent	1,4-Dichlorobenzene	180-60012-1	0.25	0.125	mg/L	U	0.25		Chesapeake	2017
Premium Solvent	1,4-Dichlorobenzene	180-59840-1	0.25	0.125	mg/L	U	0.25		Cohoes	2017
Premium Solvent	1,4-Dichlorobenzene	180-59969-1	0.25	0.125	mg/L	U	0.25		Lackawanna	2017
Premium Solvent	1,4-Dichlorobenzene	180-60895-1	0.25	0.125	mg/L	U	0.25		Archdale	2017
Premium Solvent	1,4-Dichlorobenzene	180-60618-1	0.25	0.125	mg/L	U	0.25		Barre	2017
Premium Solvent	1,4-Dichlorobenzene	180-81014-1	0.25	0.125	mg/L	U H	0.25		Albuquerque	2018
Premium Solvent	1,4-Dichlorobenzene	180-77400-1	0.25	0.125	mg/L	U	0.25		Archdale	2018
Premium Solvent	1,4-Dichlorobenzene	180-80742-1	0.25	0.125	mg/L	U	0.25	52	Avon	2018
Premium Solvent	1,4-Dichlorobenzene	180-81163-1	0.25	0.125	mg/L	U	0.25		Barre	2018
Premium Solvent	1,4-Dichlorobenzene	180-77125-1	0.25	0.125	mg/L	U	0.25		Boise	2018
Premium Solvent	1,4-Dichlorobenzene	180-77004-1	0.25	0.125	mg/L	U	0.25		Chandler	2018
Premium Solvent	1,4-Dichlorobenzene	180-77391-1	0.25	0.125	mg/L	U	0.25		Chester	2018
Premium Solvent	1,4-Dichlorobenzene	180-82330-1	0.25	0.125	mg/L	U	0.25		Clackamas	2018
Premium Solvent	1,4-Dichlorobenzene	180-77710-1	0.25	0.125	mg/L	U	0.25		Cohoes	2018
Premium Solvent	1,4-Dichlorobenzene	180-81146-1	0.25	0.125	mg/L	U	0.25		Farmington	2018
Premium Solvent	1,4-Dichlorobenzene	180-77381-1	0.25	0.125	mg/L	U	0.25		Kaukauna	2018
Premium Solvent	1,4-Dichlorobenzene	180-77382-1	0.25	0.125	mg/L	U	0.25		Kaukauna	2018

Premium Solvent	1,4-Dichlorobenzene	180-77383-1	0.25	0.125	mg/L	U	0.25	Kaukauna	2018
Premium Solvent	1,4-Dichlorobenzene	180-77070-1	0.25	0.125	mg/L	U	0.25	Lackawanna	2018
Premium Solvent	1,4-Dichlorobenzene	180-80012-1	0.25	0.125	mg/L	U	0.25	Oklahoma City	2018
Premium Solvent	1,4-Dichlorobenzene	180-80014-1	0.25	0.125	mg/L	U	0.25	Oklahoma City	2018
Premium Solvent	1,4-Dichlorobenzene	180-80848-1	0.25	0.125	mg/L	U	0.25	Sacramento	2018
Premium Solvent	1,4-Dichlorobenzene	180-81823-1	0.25	0.125	mg/L	U	0.25	Salisbury	2018
Premium Solvent	1,4-Dichlorobenzene	180-76988-1	0.25	0.125	mg/L	U	0.25	Salt Lake City	2018
Premium Solvent	1,4-Dichlorobenzene	180-78677-1	0.25	0.125	mg/L	U	0.25	Santa Ana	2018
Premium Solvent	1,4-Dichlorobenzene	180-78463-1	0.25	0.125	mg/L	U	0.25	St Pauls	2018
Premium Solvent	1,4-Dichlorobenzene	180-76683-1	0.25	0.125	mg/L	U	0.25	Syracuse	2018
Premium Solvent	1,4-Dichlorobenzene	180-79370-1	0.25	0.125	mg/L	U	0.25	Tampa	2018
Premium Solvent	1,4-Dichlorobenzene	180-78689-1	0.25	0.125	mg/L	U	0.25	Vinton	2018
Premium Solvent	1,4-Dichlorobenzene	180-76265-1	0.25	0.125	mg/L	U	0.25	Waukesha	2018
Premium Solvent	1,4-Dichlorobenzene	180-76266-1	0.25	0.125	mg/L	U	0.25	Waukesha	2018
Premium Solvent	1,4-Dichlorobenzene	180-76267-1	0.25	0.125	mg/L	U	0.25	Waukesha	2018
Premium Solvent	1,4-Dichlorobenzene	180-76262-1	0.25	0.125	mg/L	U	0.25	Wichita	2018
Premium Solvent	1,4-Dichlorobenzene	180-72259-2	0.25	0.125	mg/L	U	0.25	Chester	2018
Premium Solvent	1,4-Dichlorobenzene	180-72871-1	0.25	0.125	mg/L	U	0.25	Sacramento	2018
Premium Solvent	1,4-Dichlorobenzene	180-71540-1	0.25	0.125	mg/L	U	0.25	Salisbury	2018
Premium Solvent	1,4-Dichlorobenzene	180-71594-1	0.25	0.125	mg/L	U	0.25	Santa Ana	2018
Premium Solvent	1,4-Dichlorobenzene	180-74277-1	0.25	0.125	mg/L	U	0.25	Tallahassee	2018
Premium Solvent	1,4-Dichlorobenzene	180-54679-1	0.16	0.16	mg/L	J	0.25	Waukesha	2016
Premium Solvent	1,4-Dichlorobenzene	180-54676-1	0.19	0.19	mg/L	J	0.25	Waukesha	2016
Premium Solvent	1,4-Dichlorobenzene	180-53962-1	0.5	0.25	mg/L	U	0.5	Kaukauna	2016
Premium Solvent	1,4-Dichlorobenzene	180-56003-1	0.5	0.25	mg/L	U	0.5	St. Pauls	2016
Premium Solvent	1,4-Dichlorobenzene	180-55533-1	0.5	0.25	mg/L	U	0.5	Syracuse	2016
Premium Solvent	1,4-Dichlorobenzene	180-65696-1	0.26	0.26	mg/L		0.25	Lackawanna	2017
Premium Solvent	2,4,5-Trichlorophenol	180-58611-1	0.09	0.045	mg/L	U	0.09	Sacremento	2016
Premium Solvent	2,4,5-Trichlorophenol	180-58744-1	0.13	0.065	mg/L	U	0.13	Albuquerque	2016
Premium Solvent	2,4,5-Trichlorophenol	180-52527-1	0.13	0.065	mg/L	U	0.13	Boise	2016
Premium Solvent	2,4,5-Trichlorophenol	180-58394-1	0.13	0.065	mg/L	U	0.13	Charlotte	2016
Premium Solvent	2,4,5-Trichlorophenol	180-54771-1	0.13	0.065	mg/L	U	0.13	Chester	2016
Premium Solvent	2,4,5-Trichlorophenol	180-58680-1	0.13	0.065	mg/L	U	0.13	Clackamas	2016
Premium Solvent	2,4,5-Trichlorophenol	180-56685-1	0.13	0.065	mg/L	U	0.13	Farmington	2016

Premium Solvent	2,4,5-Trichlorophenol	180-53961-1	0.13	0.065	mg/L	U	0.13	Kaukauna	2016
Premium Solvent	2,4,5-Trichlorophenol	180-53962-1	0.13	0.065	mg/L	U	0.13	Kaukauna	2016
Premium Solvent	2,4,5-Trichlorophenol	180-57964-1	0.13	0.065	mg/L	U	0.13	Omaha	2016
Premium Solvent	2,4,5-Trichlorophenol	180-56003-1	0.13	0.065	mg/L	U	0.13	St. Pauls	2016
Premium Solvent	2,4,5-Trichlorophenol	180-58138-1	0.13	0.065	mg/L	U	0.13	Tampa	2016
Premium Solvent	2,4,5-Trichlorophenol	180-58732-1	0.13	0.065	mg/L	U	0.13	Tulsa	2016
Premium Solvent	2,4,5-Trichlorophenol	180-58266-1	0.13	0.065	mg/L	U	0.13	Vinton	2016
Premium Solvent	2,4,5-Trichlorophenol	180-54672-1	0.13	0.065	mg/L	U	0.13	Waukesha	2016
Premium Solvent	2,4,5-Trichlorophenol	180-54674-1	0.13	0.065	mg/L	U	0.13	Waukesha	2016
Premium Solvent	2,4,5-Trichlorophenol	180-54675-1	0.13	0.065	mg/L	U	0.13	Waukesha	2016
Premium Solvent	2,4,5-Trichlorophenol	180-54676-1	0.13	0.065	mg/L	U	0.13	Waukesha	2016
Premium Solvent	2,4,5-Trichlorophenol	180-54677-1	0.13	0.065	mg/L	U	0.13	Waukesha	2016
Premium Solvent	2,4,5-Trichlorophenol	180-54678-1	0.13	0.065	mg/L	U	0.13	Waukesha	2016
Premium Solvent	2,4,5-Trichlorophenol	180-54679-1	0.13	0.065	mg/L	U	0.13	Waukesha	2016
Premium Solvent	2,4,5-Trichlorophenol	180-54680-1	0.13	0.065	mg/L	U	0.13	Waukesha	2016
Premium Solvent	2,4,5-Trichlorophenol	180-66650-1	0.13	0.065	mg/L	U	0.13	Albuquerque	2017
Premium Solvent	2,4,5-Trichlorophenol	180-65687-1	0.13	0.065	mg/L	U	0.13	Archdale	2017
Premium Solvent	2,4,5-Trichlorophenol	180-65693-1	0.13	0.065	mg/L	U	0.13	Avon	2017
Premium Solvent	2,4,5-Trichlorophenol	180-64613-1	0.13	0.065	mg/L	U	0.13	Chandler	2017
Premium Solvent	2,4,5-Trichlorophenol	180-70321-1	0.13	0.065	mg/L	U	0.13	Chesapeake	2017
Premium Solvent	2,4,5-Trichlorophenol	180-69209-1	0.13	0.065	mg/L	U	0.13	Clackamas	2017
Premium Solvent	2,4,5-Trichlorophenol	180-65928-1	0.13	0.065	mg/L	U	0.13	Cohoes	2017
Premium Solvent	2,4,5-Trichlorophenol	180-68416-1	0.13	0.065	mg/L	U	0.13	Farmington	2017
Premium Solvent	2,4,5-Trichlorophenol	180-70383-1	0.13	0.065	mg/L	U	0.13	Grand Island	2017
Premium Solvent	2,4,5-Trichlorophenol	180-64751-1	0.13	0.065	mg/L	U *	0.13	Kaukauna	2017
Premium Solvent	2,4,5-Trichlorophenol	180-64752-1	0.13	0.065	mg/L	U *	0.13	Kaukauna	2017
Premium Solvent	2,4,5-Trichlorophenol	180-64753-1	0.13	0.065	mg/L	U *	0.13	Kaukauna	2017
Premium Solvent	2,4,5-Trichlorophenol	180-65696-1	0.13	0.065	mg/L	U	0.13	Lackawanna	2017
Premium Solvent	2,4,5-Trichlorophenol	180-69242-1	0.13	0.065	mg/L	U	0.13	Oklahoma City	2017
Premium Solvent	2,4,5-Trichlorophenol	180-69237-1	0.13	0.065	mg/L	U	0.13	Omaha	2017
Premium Solvent	2,4,5-Trichlorophenol	180-70392-1	0.13	0.065	mg/L	U	0.13	Raleigh	2017
Premium Solvent	2,4,5-Trichlorophenol	180-68772-1	0.13	0.065	mg/L	U	0.13	St Pauls	2017
Premium Solvent	2,4,5-Trichlorophenol	180-65396-1	0.13	0.065	mg/L	U	0.13	Syracuse	2017
Premium Solvent	2,4,5-Trichlorophenol	180-66253-1	0.13	0.065	mg/L	U	0.13	Vinton	2017

Premium Solvent	2,4,5-Trichlorophenol	180-68919-1	0.13	0.065	mg/L	U	0.13		Waukesha	2017
Premium Solvent	2,4,5-Trichlorophenol	180-68924-1	0.13	0.065	mg/L	U	0.13		Waukesha	2017
Premium Solvent	2,4,5-Trichlorophenol	180-68925-1	0.13	0.065	mg/L	U	0.13		Waukesha	2017
Premium Solvent	2,4,5-Trichlorophenol	180-64796-1	0.13	0.065	mg/L	U *	0.13		Wichita	2017
Premium Solvent	2,4,5-Trichlorophenol	180-60141-1	0.13	0.065	mg/L	U	0.13		Avon	2017
Premium Solvent	2,4,5-Trichlorophenol	180-60012-1	0.13	0.065	mg/L	U	0.13		Chesapeake	2017
Premium Solvent	2,4,5-Trichlorophenol	180-59840-1	0.13	0.065	mg/L	U	0.13		Cohoes	2017
Premium Solvent	2,4,5-Trichlorophenol	180-59969-1	0.13	0.065	mg/L	U	0.13		Lackawanna	2017
Premium Solvent	2,4,5-Trichlorophenol	180-60895-1	0.13	0.065	mg/L	U	0.13		Archdale	2017
Premium Solvent	2,4,5-Trichlorophenol	180-60618-1	0.13	0.065	mg/L	U	0.13		Barre	2017
Premium Solvent	2,4,5-Trichlorophenol	180-81014-1	0.13	0.065	mg/L	U H	0.13	52	Albuquerque	2018
Premium Solvent	2,4,5-Trichlorophenol	180-77400-1	0.13	0.065	mg/L	U	0.13		Archdale	2018
Premium Solvent	2,4,5-Trichlorophenol	180-80742-1	0.13	0.065	mg/L	U	0.13		Avon	2018
Premium Solvent	2,4,5-Trichlorophenol	180-81163-1	0.13	0.065	mg/L	U	0.13		Barre	2018
Premium Solvent	2,4,5-Trichlorophenol	180-77125-1	0.13	0.065	mg/L	U	0.13		Boise	2018
Premium Solvent	2,4,5-Trichlorophenol	180-77004-1	0.13	0.065	mg/L	U	0.13		Chandler	2018
Premium Solvent	2,4,5-Trichlorophenol	180-77391-1	0.13	0.065	mg/L	U	0.13		Chester	2018
Premium Solvent	2,4,5-Trichlorophenol	180-82330-1	0.13	0.065	mg/L	U	0.13		Clackamas	2018
Premium Solvent	2,4,5-Trichlorophenol	180-77710-1	0.13	0.065	mg/L	U	0.13		Cohoes	2018
Premium Solvent	2,4,5-Trichlorophenol	180-81146-1	0.13	0.065	mg/L	U	0.13		Farmington	2018
Premium Solvent	2,4,5-Trichlorophenol	180-77381-1	0.13	0.065	mg/L	U	0.13		Kaukauna	2018
Premium Solvent	2,4,5-Trichlorophenol	180-77382-1	0.13	0.065	mg/L	U	0.13		Kaukauna	2018
Premium Solvent	2,4,5-Trichlorophenol	180-77383-1	0.13	0.065	mg/L	U	0.13		Kaukauna	2018
Premium Solvent	2,4,5-Trichlorophenol	180-77070-1	0.13	0.065	mg/L	U	0.13		Lackawanna	2018
Premium Solvent	2,4,5-Trichlorophenol	180-80014-1	0.13	0.065	mg/L	U	0.13		Oklahoma City	2018
Premium Solvent	2,4,5-Trichlorophenol	180-80848-1	0.13	0.065	mg/L	U	0.13		Sacramento	2018
Premium Solvent	2,4,5-Trichlorophenol	180-81823-1	0.13	0.065	mg/L	U	0.13		Salisbury	2018
Premium Solvent	2,4,5-Trichlorophenol	180-76988-1	0.13	0.065	mg/L	U	0.13		Salt Lake City	2018
Premium Solvent	2,4,5-Trichlorophenol	180-78677-1	0.13	0.065	mg/L	U	0.13		Santa Ana	2018
Premium Solvent	2,4,5-Trichlorophenol	180-78463-1	0.13	0.065	mg/L	U	0.13		St Pauls	2018
Premium Solvent	2,4,5-Trichlorophenol	180-76683-1	0.13	0.065	mg/L	U	0.13		Syracuse	2018
Premium Solvent	2,4,5-Trichlorophenol	180-79370-1	0.13	0.065	mg/L	U	0.13		Tampa	2018
Premium Solvent	2,4,5-Trichlorophenol	180-78689-1	0.13	0.065	mg/L	U	0.13		Vinton	2018
Premium Solvent	2,4,5-Trichlorophenol	180-76265-1	0.13	0.065	mg/L	U	0.13		Waukesha	2018

Premium Solvent	2,4,5-Trichlorophenol	180-76266-1	0.13	0.065	mg/L	U	0.13	Waukesha	2018
Premium Solvent	2,4,5-Trichlorophenol	180-76267-1	0.13	0.065	mg/L	U	0.13	Waukesha	2018
Premium Solvent	2,4,5-Trichlorophenol	180-76262-1	0.13	0.065	mg/L	U	0.13	Wichita	2018
Premium Solvent	2,4,5-Trichlorophenol	180-72259-2	0.13	0.065	mg/L	U	0.13	Chester	2018
Premium Solvent	2,4,5-Trichlorophenol	180-72871-1	0.13	0.065	mg/L	U *	0.13	Sacramento	2018
Premium Solvent	2,4,5-Trichlorophenol	180-71540-1	0.13	0.065	mg/L	U	0.13	Salisbury	2018
Premium Solvent	2,4,5-Trichlorophenol	180-71594-1	0.13	0.065	mg/L	U	0.13	Santa Ana	2018
Premium Solvent	2,4,5-Trichlorophenol	180-74277-1	0.13	0.065	mg/L	U	0.13	Tallahassee	2018
Premium Solvent	2,4,5-Trichlorophenol	180-53494-1	0.15	0.15	mg/L		0.13	Chandler	2016
Premium Solvent	2,4,5-Trichlorophenol	180-54673-1	0.15	0.15	mg/L	p	0.13	Waukesha	2016
Premium Solvent	2,4,5-Trichlorophenol	180-55533-1	0.22	0.22	mg/L		0.13	Syracuse	2016
Premium Solvent	2,4,5-Trichlorophenol	180-53963-1	0.26	0.26	mg/L		0.13	Kaukauna	2016
Premium Solvent	2,4,5-Trichlorophenol	180-80012-1	20	10	mg/L	U	20	Oklahoma City	2018
Premium Solvent	2,4,6-Trichlorophenol	180-58611-1	0.09	0.045	mg/L	U	0.09	Sacremento	2016
Premium Solvent	2,4,6-Trichlorophenol	180-58744-1	0.13	0.065	mg/L	U	0.13	Albuquerque	2016
Premium Solvent	2,4,6-Trichlorophenol	180-52527-1	0.13	0.065	mg/L	U	0.13	Boise	2016
Premium Solvent	2,4,6-Trichlorophenol	180-53494-1	0.13	0.065	mg/L	U	0.13	Chandler	2016
Premium Solvent	2,4,6-Trichlorophenol	180-58394-1	0.13	0.065	mg/L	U	0.13	Charlotte	2016
Premium Solvent	2,4,6-Trichlorophenol	180-54771-1	0.13	0.065	mg/L	U	0.13	Chester	2016
Premium Solvent	2,4,6-Trichlorophenol	180-58680-1	0.13	0.065	mg/L	U	0.13	Clackamas	2016
Premium Solvent	2,4,6-Trichlorophenol	180-56685-1	0.13	0.065	mg/L	U	0.13	Farmington	2016
Premium Solvent	2,4,6-Trichlorophenol	180-53961-1	0.13	0.065	mg/L	U	0.13	Kaukauna	2016
Premium Solvent	2,4,6-Trichlorophenol	180-53962-1	0.13	0.065	mg/L	U	0.13	Kaukauna	2016
Premium Solvent	2,4,6-Trichlorophenol	180-53963-1	0.13	0.065	mg/L	U	0.13	Kaukauna	2016
Premium Solvent	2,4,6-Trichlorophenol	180-57964-1	0.13	0.065	mg/L	U	0.13	Omaha	2016
Premium Solvent	2,4,6-Trichlorophenol	180-56003-1	0.13	0.065	mg/L	U	0.13	St. Pauls	2016
Premium Solvent	2,4,6-Trichlorophenol	180-55533-1	0.13	0.065	mg/L	U	0.13	Syracuse	2016
Premium Solvent	2,4,6-Trichlorophenol	180-58138-1	0.13	0.065	mg/L	U	0.13	Tampa	2016
Premium Solvent	2,4,6-Trichlorophenol	180-58732-1	0.13	0.065	mg/L	U	0.13	Tulsa	2016
Premium Solvent	2,4,6-Trichlorophenol	180-58266-1	0.13	0.065	mg/L	U	0.13	Vinton	2016
Premium Solvent	2,4,6-Trichlorophenol	180-54672-1	0.13	0.065	mg/L	U	0.13	Waukesha	2016
Premium Solvent	2,4,6-Trichlorophenol	180-54673-1	0.13	0.065	mg/L	U	0.13	Waukesha	2016
Premium Solvent	2,4,6-Trichlorophenol	180-54674-1	0.13	0.065	mg/L	U	0.13	Waukesha	2016
Premium Solvent	2,4,6-Trichlorophenol	180-54675-1	0.13	0.065	mg/L	U	0.13	Waukesha	2016

Premium Solvent	2,4,6-Trichlorophenol	180-54676-1	0.13	0.065	mg/L	U	0.13		Waukesha	2016
Premium Solvent	2,4,6-Trichlorophenol	180-54677-1	0.13	0.065	mg/L	U	0.13		Waukesha	2016
Premium Solvent	2,4,6-Trichlorophenol	180-54678-1	0.13	0.065	mg/L	U	0.13		Waukesha	2016
Premium Solvent	2,4,6-Trichlorophenol	180-54679-1	0.13	0.065	mg/L	U	0.13		Waukesha	2016
Premium Solvent	2,4,6-Trichlorophenol	180-54680-1	0.13	0.065	mg/L	U	0.13		Waukesha	2016
Premium Solvent	2,4,6-Trichlorophenol	180-66650-1	0.13	0.065	mg/L	U	0.13		Albuquerque	2017
Premium Solvent	2,4,6-Trichlorophenol	180-65687-1	0.13	0.065	mg/L	U	0.13		Archdale	2017
Premium Solvent	2,4,6-Trichlorophenol	180-65693-1	0.13	0.065	mg/L	U	0.13		Avon	2017
Premium Solvent	2,4,6-Trichlorophenol	180-64613-1	0.13	0.065	mg/L	U	0.13		Chandler	2017
Premium Solvent	2,4,6-Trichlorophenol	180-70321-1	0.13	0.065	mg/L	U	0.13		Chesapeake	2017
Premium Solvent	2,4,6-Trichlorophenol	180-69209-1	0.13	0.065	mg/L	U	0.13		Clackamas	2017
Premium Solvent	2,4,6-Trichlorophenol	180-68416-1	0.13	0.065	mg/L	U	0.13		Farmington	2017
Premium Solvent	2,4,6-Trichlorophenol	180-70383-1	0.13	0.065	mg/L	U	0.13		Grand Island	2017
Premium Solvent	2,4,6-Trichlorophenol	180-64751-1	0.13	0.065	mg/L	U *	0.13		Kaukauna	2017
Premium Solvent	2,4,6-Trichlorophenol	180-64752-1	0.13	0.065	mg/L	U *	0.13		Kaukauna	2017
Premium Solvent	2,4,6-Trichlorophenol	180-64753-1	0.13	0.065	mg/L	U *	0.13		Kaukauna	2017
Premium Solvent	2,4,6-Trichlorophenol	180-65696-1	0.13	0.065	mg/L	U	0.13		Lackawanna	2017
Premium Solvent	2,4,6-Trichlorophenol	180-69242-1	0.13	0.065	mg/L	U	0.13		Oklahoma City	2017
Premium Solvent	2,4,6-Trichlorophenol	180-69237-1	0.13	0.065	mg/L	U	0.13		Omaha	2017
Premium Solvent	2,4,6-Trichlorophenol	180-70392-1	0.13	0.065	mg/L	U	0.13		Raleigh	2017
Premium Solvent	2,4,6-Trichlorophenol	180-68772-1	0.13	0.065	mg/L	U	0.13		St Pauls	2017
Premium Solvent	2,4,6-Trichlorophenol	180-65396-1	0.13	0.065	mg/L	U	0.13		Syracuse	2017
Premium Solvent	2,4,6-Trichlorophenol	180-66253-1	0.13	0.065	mg/L	U	0.13		Vinton	2017
Premium Solvent	2,4,6-Trichlorophenol	180-68919-1	0.13	0.065	mg/L	U	0.13		Waukesha	2017
Premium Solvent	2,4,6-Trichlorophenol	180-68924-1	0.13	0.065	mg/L	U	0.13		Waukesha	2017
Premium Solvent	2,4,6-Trichlorophenol	180-68925-1	0.13	0.065	mg/L	U	0.13		Waukesha	2017
Premium Solvent	2,4,6-Trichlorophenol	180-64796-1	0.13	0.065	mg/L	U *	0.13		Wichita	2017
Premium Solvent	2,4,6-Trichlorophenol	180-60141-1	0.13	0.065	mg/L	U	0.13		Avon	2017
Premium Solvent	2,4,6-Trichlorophenol	180-60012-1	0.13	0.065	mg/L	U	0.13		Chesapeake	2017
Premium Solvent	2,4,6-Trichlorophenol	180-59840-1	0.13	0.065	mg/L	U	0.13		Cohoes	2017
Premium Solvent	2,4,6-Trichlorophenol	180-59969-1	0.13	0.065	mg/L	U	0.13	52	Lackawanna	2017
Premium Solvent	2,4,6-Trichlorophenol	180-60895-1	0.13	0.065	mg/L	U	0.13		Archdale	2017
Premium Solvent	2,4,6-Trichlorophenol	180-60618-1	0.13	0.065	mg/L	U	0.13		Barre	2017
Premium Solvent	2,4,6-Trichlorophenol	180-81014-1	0.13	0.065	mg/L	U H	0.13		Albuquerque	2018

Premium Solvent	2,4,6-Trichlorophenol	180-77400-1	0.13	0.065	mg/L	U	0.13	Archdale	2018
Premium Solvent	2,4,6-Trichlorophenol	180-80742-1	0.13	0.065	mg/L	U	0.13	Avon	2018
Premium Solvent	2,4,6-Trichlorophenol	180-81163-1	0.13	0.065	mg/L	U	0.13	Barre	2018
Premium Solvent	2,4,6-Trichlorophenol	180-77125-1	0.13	0.065	mg/L	U	0.13	Boise	2018
Premium Solvent	2,4,6-Trichlorophenol	180-77004-1	0.13	0.065	mg/L	U	0.13	Chandler	2018
Premium Solvent	2,4,6-Trichlorophenol	180-77391-1	0.13	0.065	mg/L	U	0.13	Chester	2018
Premium Solvent	2,4,6-Trichlorophenol	180-82330-1	0.13	0.065	mg/L	U	0.13	Clackamas	2018
Premium Solvent	2,4,6-Trichlorophenol	180-77710-1	0.13	0.065	mg/L	U	0.13	Cohoes	2018
Premium Solvent	2,4,6-Trichlorophenol	180-81146-1	0.13	0.065	mg/L	U	0.13	Farmington	2018
Premium Solvent	2,4,6-Trichlorophenol	180-77381-1	0.13	0.065	mg/L	U	0.13	Kaukauna	2018
Premium Solvent	2,4,6-Trichlorophenol	180-77382-1	0.13	0.065	mg/L	U	0.13	Kaukauna	2018
Premium Solvent	2,4,6-Trichlorophenol	180-77383-1	0.13	0.065	mg/L	U	0.13	Kaukauna	2018
Premium Solvent	2,4,6-Trichlorophenol	180-77070-1	0.13	0.065	mg/L	U	0.13	Lackawanna	2018
Premium Solvent	2,4,6-Trichlorophenol	180-80014-1	0.13	0.065	mg/L	U	0.13	Oklahoma City	2018
Premium Solvent	2,4,6-Trichlorophenol	180-80848-1	0.13	0.065	mg/L	U	0.13	Sacramento	2018
Premium Solvent	2,4,6-Trichlorophenol	180-81823-1	0.13	0.065	mg/L	U	0.13	Salisbury	2018
Premium Solvent	2,4,6-Trichlorophenol	180-76988-1	0.13	0.065	mg/L	U	0.13	Salt Lake City	2018
Premium Solvent	2,4,6-Trichlorophenol	180-78677-1	0.13	0.065	mg/L	U	0.13	Santa Ana	2018
Premium Solvent	2,4,6-Trichlorophenol	180-78463-1	0.13	0.065	mg/L	U	0.13	St Pauls	2018
Premium Solvent	2,4,6-Trichlorophenol	180-76683-1	0.13	0.065	mg/L	U	0.13	Syracuse	2018
Premium Solvent	2,4,6-Trichlorophenol	180-79370-1	0.13	0.065	mg/L	U	0.13	Tampa	2018
Premium Solvent	2,4,6-Trichlorophenol	180-78689-1	0.13	0.065	mg/L	U	0.13	Vinton	2018
Premium Solvent	2,4,6-Trichlorophenol	180-76265-1	0.13	0.065	mg/L	U	0.13	Waukesha	2018
Premium Solvent	2,4,6-Trichlorophenol	180-76266-1	0.13	0.065	mg/L	U	0.13	Waukesha	2018
Premium Solvent	2,4,6-Trichlorophenol	180-76267-1	0.13	0.065	mg/L	U	0.13	Waukesha	2018
Premium Solvent	2,4,6-Trichlorophenol	180-76262-1	0.13	0.065	mg/L	U	0.13	Wichita	2018
Premium Solvent	2,4,6-Trichlorophenol	180-72259-2	0.13	0.065	mg/L	U	0.13	Chester	2018
Premium Solvent	2,4,6-Trichlorophenol	180-72871-1	0.13	0.065	mg/L	U	0.13	Sacramento	2018
Premium Solvent	2,4,6-Trichlorophenol	180-71540-1	0.13	0.065	mg/L	U	0.13	Salisbury	2018
Premium Solvent	2,4,6-Trichlorophenol	180-71594-1	0.13	0.065	mg/L	U	0.13	Santa Ana	2018
Premium Solvent	2,4,6-Trichlorophenol	180-74277-1	0.13	0.065	mg/L	U	0.13	Tallahassee	2018
Premium Solvent	2,4,6-Trichlorophenol	180-65928-1	0.16	0.16	mg/L		0.13	Cohoes	2017
Premium Solvent	2,4,6-Trichlorophenol	180-80012-1	20	10	mg/L	U	20	Oklahoma City	2018
Premium Solvent	2,4-Dinitrotoluene	180-58611-1	0.09	0.045	mg/L	U	0.09	Sacremento	2016

Premium Solvent	2,4-Dinitrotoluene	180-58744-1	0.13	0.065	mg/L	U	0.13	Albuquerque	2016
Premium Solvent	2,4-Dinitrotoluene	180-52527-1	0.13	0.065	mg/L	U	0.13	Boise	2016
Premium Solvent	2,4-Dinitrotoluene	180-53494-1	0.13	0.065	mg/L	U	0.13	Chandler	2016
Premium Solvent	2,4-Dinitrotoluene	180-58394-1	0.13	0.065	mg/L	U	0.13	Charlotte	2016
Premium Solvent	2,4-Dinitrotoluene	180-54771-1	0.13	0.065	mg/L	U	0.13	Chester	2016
Premium Solvent	2,4-Dinitrotoluene	180-58680-1	0.13	0.065	mg/L	U	0.13	Clackamas	2016
Premium Solvent	2,4-Dinitrotoluene	180-56685-1	0.13	0.065	mg/L	U	0.13	Farmington	2016
Premium Solvent	2,4-Dinitrotoluene	180-53962-1	0.13	0.065	mg/L	U	0.13	Kaukauna	2016
Premium Solvent	2,4-Dinitrotoluene	180-53963-1	0.13	0.065	mg/L	U	0.13	Kaukauna	2016
Premium Solvent	2,4-Dinitrotoluene	180-57964-1	0.13	0.065	mg/L	U	0.13	Omaha	2016
Premium Solvent	2,4-Dinitrotoluene	180-56003-1	0.13	0.065	mg/L	U	0.13	St. Pauls	2016
Premium Solvent	2,4-Dinitrotoluene	180-55533-1	0.13	0.065	mg/L	U	0.13	Syracuse	2016
Premium Solvent	2,4-Dinitrotoluene	180-58138-1	0.13	0.065	mg/L	U	0.13	Tampa	2016
Premium Solvent	2,4-Dinitrotoluene	180-58732-1	0.13	0.065	mg/L	U	0.13	Tulsa	2016
Premium Solvent	2,4-Dinitrotoluene	180-58266-1	0.13	0.065	mg/L	U	0.13	Vinton	2016
Premium Solvent	2,4-Dinitrotoluene	180-54672-1	0.13	0.065	mg/L	U	0.13	Waukesha	2016
Premium Solvent	2,4-Dinitrotoluene	180-54674-1	0.13	0.065	mg/L	U	0.13	Waukesha	2016
Premium Solvent	2,4-Dinitrotoluene	180-54675-1	0.13	0.065	mg/L	U	0.13	Waukesha	2016
Premium Solvent	2,4-Dinitrotoluene	180-54676-1	0.13	0.065	mg/L	U	0.13	Waukesha	2016
Premium Solvent	2,4-Dinitrotoluene	180-54677-1	0.13	0.065	mg/L	U	0.13	Waukesha	2016
Premium Solvent	2,4-Dinitrotoluene	180-54678-1	0.13	0.065	mg/L	U	0.13	Waukesha	2016
Premium Solvent	2,4-Dinitrotoluene	180-54679-1	0.13	0.065	mg/L	U	0.13	Waukesha	2016
Premium Solvent	2,4-Dinitrotoluene	180-66650-1	0.13	0.065	mg/L	U	0.13	Albuquerque	2017
Premium Solvent	2,4-Dinitrotoluene	180-65687-1	0.13	0.065	mg/L	U	0.13	Archdale	2017
Premium Solvent	2,4-Dinitrotoluene	180-65693-1	0.13	0.065	mg/L	U	0.13	Avon	2017
Premium Solvent	2,4-Dinitrotoluene	180-64613-1	0.13	0.065	mg/L	U	0.13	Chandler	2017
Premium Solvent	2,4-Dinitrotoluene	180-70321-1	0.13	0.065	mg/L	U	0.13	Chesapeake	2017
Premium Solvent	2,4-Dinitrotoluene	180-69209-1	0.13	0.065	mg/L	U	0.13	Clackamas	2017
Premium Solvent	2,4-Dinitrotoluene	180-65928-1	0.13	0.065	mg/L	U	0.13	Cohoes	2017
Premium Solvent	2,4-Dinitrotoluene	180-68416-1	0.13	0.065	mg/L	U	0.13	Farmington	2017
Premium Solvent	2,4-Dinitrotoluene	180-70383-1	0.13	0.065	mg/L	U	0.13	Grand Island	2017
Premium Solvent	2,4-Dinitrotoluene	180-64751-1	0.13	0.065	mg/L	U *	0.13	Kaukauna	2017
Premium Solvent	2,4-Dinitrotoluene	180-64752-1	0.13	0.065	mg/L	U *	0.13	Kaukauna	2017
Premium Solvent	2,4-Dinitrotoluene	180-64753-1	0.13	0.065	mg/L	U *	0.13	Kaukauna	2017

Premium Solvent	2,4-Dinitrotoluene	180-65696-1	0.13	0.065	mg/L	U	0.13		Lackawanna	2017
Premium Solvent	2,4-Dinitrotoluene	180-69242-1	0.13	0.065	mg/L	U	0.13		Oklahoma City	2017
Premium Solvent	2,4-Dinitrotoluene	180-69237-1	0.13	0.065	mg/L	U	0.13		Omaha	2017
Premium Solvent	2,4-Dinitrotoluene	180-70392-1	0.13	0.065	mg/L	U	0.13		Raleigh	2017
Premium Solvent	2,4-Dinitrotoluene	180-68772-1	0.13	0.065	mg/L	U	0.13		St Pauls	2017
Premium Solvent	2,4-Dinitrotoluene	180-65396-1	0.13	0.065	mg/L	U	0.13		Syracuse	2017
Premium Solvent	2,4-Dinitrotoluene	180-66253-1	0.13	0.065	mg/L	U *	0.13		Vinton	2017
Premium Solvent	2,4-Dinitrotoluene	180-68919-1	0.13	0.065	mg/L	U	0.13		Waukesha	2017
Premium Solvent	2,4-Dinitrotoluene	180-68924-1	0.13	0.065	mg/L	U	0.13		Waukesha	2017
Premium Solvent	2,4-Dinitrotoluene	180-68925-1	0.13	0.065	mg/L	U	0.13		Waukesha	2017
Premium Solvent	2,4-Dinitrotoluene	180-64796-1	0.13	0.065	mg/L	U *	0.13		Wichita	2017
Premium Solvent	2,4-Dinitrotoluene	180-60141-1	0.13	0.065	mg/L	U	0.13		Avon	2017
Premium Solvent	2,4-Dinitrotoluene	180-60012-1	0.13	0.065	mg/L	U	0.13		Chesapeake	2017
Premium Solvent	2,4-Dinitrotoluene	180-59840-1	0.13	0.065	mg/L	U	0.13		Cohoes	2017
Premium Solvent	2,4-Dinitrotoluene	180-59969-1	0.13	0.065	mg/L	U	0.13		Lackawanna	2017
Premium Solvent	2,4-Dinitrotoluene	180-60895-1	0.13	0.065	mg/L	U	0.13		Archdale	2017
Premium Solvent	2,4-Dinitrotoluene	180-60618-1	0.13	0.065	mg/L	U	0.13	52	Barre	2017
Premium Solvent	2,4-Dinitrotoluene	180-81014-1	0.13	0.065	mg/L	U H	0.13		Albuquerque	2018
Premium Solvent	2,4-Dinitrotoluene	180-77400-1	0.13	0.065	mg/L	U	0.13		Archdale	2018
Premium Solvent	2,4-Dinitrotoluene	180-80742-1	0.13	0.065	mg/L	U	0.13		Avon	2018
Premium Solvent	2,4-Dinitrotoluene	180-81163-1	0.13	0.065	mg/L	U	0.13		Barre	2018
Premium Solvent	2,4-Dinitrotoluene	180-77125-1	0.13	0.065	mg/L	U	0.13		Boise	2018
Premium Solvent	2,4-Dinitrotoluene	180-77004-1	0.13	0.065	mg/L	U	0.13		Chandler	2018
Premium Solvent	2,4-Dinitrotoluene	180-77391-1	0.13	0.065	mg/L	U	0.13		Chester	2018
Premium Solvent	2,4-Dinitrotoluene	180-82330-1	0.13	0.065	mg/L	U *	0.13		Clackamas	2018
Premium Solvent	2,4-Dinitrotoluene	180-77710-1	0.13	0.065	mg/L	U	0.13		Cohoes	2018
Premium Solvent	2,4-Dinitrotoluene	180-81146-1	0.13	0.065	mg/L	U	0.13		Farmington	2018
Premium Solvent	2,4-Dinitrotoluene	180-77381-1	0.13	0.065	mg/L	U	0.13		Kaukauna	2018
Premium Solvent	2,4-Dinitrotoluene	180-77382-1	0.13	0.065	mg/L	U	0.13		Kaukauna	2018
Premium Solvent	2,4-Dinitrotoluene	180-77383-1	0.13	0.065	mg/L	U	0.13		Kaukauna	2018
Premium Solvent	2,4-Dinitrotoluene	180-77070-1	0.13	0.065	mg/L	U	0.13		Lackawanna	2018
Premium Solvent	2,4-Dinitrotoluene	180-80014-1	0.13	0.065	mg/L	U	0.13		Oklahoma City	2018
Premium Solvent	2,4-Dinitrotoluene	180-80848-1	0.13	0.065	mg/L	U	0.13		Sacramento	2018
Premium Solvent	2,4-Dinitrotoluene	180-76988-1	0.13	0.065	mg/L	U	0.13		Salt Lake City	2018

Premium Solvent	2,4-Dinitrotoluene	180-78677-1	0.13	0.065	mg/L	U	0.13	Santa Ana	2018
Premium Solvent	2,4-Dinitrotoluene	180-78463-1	0.13	0.065	mg/L	U	0.13	St Pauls	2018
Premium Solvent	2,4-Dinitrotoluene	180-76683-1	0.13	0.065	mg/L	U	0.13	Syracuse	2018
Premium Solvent	2,4-Dinitrotoluene	180-79370-1	0.13	0.065	mg/L	U	0.13	Tampa	2018
Premium Solvent	2,4-Dinitrotoluene	180-78689-1	0.13	0.065	mg/L	U	0.13	Vinton	2018
Premium Solvent	2,4-Dinitrotoluene	180-76265-1	0.13	0.065	mg/L	U	0.13	Waukesha	2018
Premium Solvent	2,4-Dinitrotoluene	180-76266-1	0.13	0.065	mg/L	U	0.13	Waukesha	2018
Premium Solvent	2,4-Dinitrotoluene	180-76267-1	0.13	0.065	mg/L	U	0.13	Waukesha	2018
Premium Solvent	2,4-Dinitrotoluene	180-76262-1	0.13	0.065	mg/L	U	0.13	Wichita	2018
Premium Solvent	2,4-Dinitrotoluene	180-72259-2	0.13	0.065	mg/L	U	0.13	Chester	2018
Premium Solvent	2,4-Dinitrotoluene	180-72871-1	0.13	0.065	mg/L	U	0.13	Sacramento	2018
Premium Solvent	2,4-Dinitrotoluene	180-71540-1	0.13	0.065	mg/L	U	0.13	Salisbury	2018
Premium Solvent	2,4-Dinitrotoluene	180-71594-1	0.13	0.065	mg/L	U	0.13	Santa Ana	2018
Premium Solvent	2,4-Dinitrotoluene	180-74277-1	0.13	0.065	mg/L	U	0.13	Tallahassee	2018
Premium Solvent	2,4-Dinitrotoluene	180-81823-1	0.22	0.22	mg/L	* p	0.13	Salisbury	2018
Premium Solvent	2,4-Dinitrotoluene	180-54680-1	0.37	0.37	mg/L		0.13	Waukesha	2016
Premium Solvent	2,4-Dinitrotoluene	180-54673-1	0.49	0.49	mg/L		0.13	Waukesha	2016
Premium Solvent	2,4-Dinitrotoluene	180-53961-1	0.7	0.7	mg/L		0.13	Kaukauna	2016
Premium Solvent	2,4-Dinitrotoluene	180-80012-1	20	10	mg/L	U	20	Oklahoma City	2018
Premium Solvent	2-Butanone (MEK)	180-58611-1	0.23	0.115	mg/L	U	0.23	Sacremento	2016
Premium Solvent	2-Butanone (MEK)	180-81014-1	0.25	0.125	mg/L	U H	0.25	Albuquerque	2018
Premium Solvent	2-Butanone (MEK)	180-80742-1	0.25	0.125	mg/L	U	0.25	Avon	2018
Premium Solvent	2-Butanone (MEK)	180-77125-1	0.25	0.125	mg/L	U	0.25	Boise	2018
Premium Solvent	2-Butanone (MEK)	180-82330-1	0.25	0.125	mg/L	U	0.25	Clackamas	2018
Premium Solvent	2-Butanone (MEK)	180-77710-1	0.25	0.125	mg/L	U	0.25	Cohoes	2018
Premium Solvent	2-Butanone (MEK)	180-81146-1	0.25	0.125	mg/L	U	0.25	Farmington	2018
Premium Solvent	2-Butanone (MEK)	180-77381-1	0.25	0.125	mg/L	U	0.25	Kaukauna	2018
Premium Solvent	2-Butanone (MEK)	180-77382-1	0.25	0.125	mg/L	U	0.25	Kaukauna	2018
Premium Solvent	2-Butanone (MEK)	180-77383-1	0.25	0.125	mg/L	U	0.25	Kaukauna	2018
Premium Solvent	2-Butanone (MEK)	180-77070-1	0.25	0.125	mg/L	U	0.25	Lackawanna	2018
Premium Solvent	2-Butanone (MEK)	180-80012-1	0.25	0.125	mg/L	U	0.25	Oklahoma City	2018
Premium Solvent	2-Butanone (MEK)	180-80014-1	0.25	0.125	mg/L	U	0.25	Oklahoma City	2018
Premium Solvent	2-Butanone (MEK)	180-80848-1	0.25	0.125	mg/L	U	0.25	Sacramento	2018
Premium Solvent	2-Butanone (MEK)	180-81823-1	0.25	0.125	mg/L	U	0.25	Salisbury	2018

Premium Solvent	2-Butanone (MEK)	180-78677-1	0.25	0.125	mg/L	U	0.25	Santa Ana	2018
Premium Solvent	2-Butanone (MEK)	180-78463-1	0.25	0.125	mg/L	U	0.25	St Pauls	2018
Premium Solvent	2-Butanone (MEK)	180-76683-1	0.25	0.125	mg/L	U	0.25	Syracuse	2018
Premium Solvent	2-Butanone (MEK)	180-79370-1	0.25	0.125	mg/L	U	0.25	Tampa	2018
Premium Solvent	2-Butanone (MEK)	180-78689-1	0.25	0.125	mg/L	U	0.25	Vinton	2018
Premium Solvent	2-Butanone (MEK)	180-76266-1	0.25	0.125	mg/L	U	0.25	Waukesha	2018
Premium Solvent	2-Butanone (MEK)	180-76262-1	0.25	0.125	mg/L	U	0.25	Wichita	2018
Premium Solvent	2-Butanone (MEK)	180-72259-2	0.25	0.125	mg/L	U	0.25	Chester	2018
Premium Solvent	2-Butanone (MEK)	180-72871-1	0.25	0.125	mg/L	U	0.25	Sacramento	2018
Premium Solvent	2-Butanone (MEK)	180-71540-1	0.25	0.125	mg/L	U	0.25	Salisbury	2018
Premium Solvent	2-Butanone (MEK)	180-71594-1	0.25	0.125	mg/L	U	0.25	Santa Ana	2018
Premium Solvent	2-Butanone (MEK)	180-58744-1	0.25	0.125	mg/L	U	0.25	Albuquerque	2016
Premium Solvent	2-Butanone (MEK)	180-53494-1	0.25	0.125	mg/L	U	0.25	Chandler	2016
Premium Solvent	2-Butanone (MEK)	180-54771-1	0.25	0.125	mg/L	U	0.25	Chester	2016
Premium Solvent	2-Butanone (MEK)	180-58680-1	0.25	0.125	mg/L	U	0.25	Clackamas	2016
Premium Solvent	2-Butanone (MEK)	180-53963-1	0.25	0.125	mg/L	U	0.25	Kaukauna	2016
Premium Solvent	2-Butanone (MEK)	180-57964-1	0.25	0.125	mg/L	U	0.25	Omaha	2016
Premium Solvent	2-Butanone (MEK)	180-58732-1	0.25	0.125	mg/L	U	0.25	Tulsa	2016
Premium Solvent	2-Butanone (MEK)	180-58266-1	0.25	0.125	mg/L	U	0.25	Vinton	2016
Premium Solvent	2-Butanone (MEK)	180-54672-1	0.25	0.125	mg/L	U	0.25	Waukesha	2016
Premium Solvent	2-Butanone (MEK)	180-54673-1	0.25	0.125	mg/L	U	0.25	Waukesha	2016
Premium Solvent	2-Butanone (MEK)	180-54674-1	0.25	0.125	mg/L	U	0.25	Waukesha	2016
Premium Solvent	2-Butanone (MEK)	180-54675-1	0.25	0.125	mg/L	U	0.25	Waukesha	2016
Premium Solvent	2-Butanone (MEK)	180-54676-1	0.25	0.125	mg/L	U	0.25	Waukesha	2016
Premium Solvent	2-Butanone (MEK)	180-54677-1	0.25	0.125	mg/L	U	0.25	Waukesha	2016
Premium Solvent	2-Butanone (MEK)	180-54678-1	0.25	0.125	mg/L	U	0.25	Waukesha	2016
Premium Solvent	2-Butanone (MEK)	180-54680-1	0.25	0.125	mg/L	U	0.25	Waukesha	2016
Premium Solvent	2-Butanone (MEK)	180-70321-1	0.25	0.125	mg/L	U	0.25	Chesapeake	2017
Premium Solvent	2-Butanone (MEK)	180-65928-1	0.25	0.125	mg/L	U	0.25	Cohoes	2017
Premium Solvent	2-Butanone (MEK)	180-68416-1	0.25	0.125	mg/L	U	0.25	Farmington	2017
Premium Solvent	2-Butanone (MEK)	180-70383-1	0.25	0.125	mg/L	U	0.25	Grand Island	2017
Premium Solvent	2-Butanone (MEK)	180-64751-1	0.25	0.125	mg/L	U	0.25	Kaukauna	2017
Premium Solvent	2-Butanone (MEK)	180-64752-1	0.25	0.125	mg/L	U	0.25	Kaukauna	2017
Premium Solvent	2-Butanone (MEK)	180-64753-1	0.25	0.125	mg/L	U	0.25	Kaukauna	2017

Premium Solvent	2-Butanone (MEK)	180-65696-1	0.25	0.125	mg/L	U	0.25		Lackawanna	2017
Premium Solvent	2-Butanone (MEK)	180-69237-1	0.25	0.125	mg/L	U	0.25		Omaha	2017
Premium Solvent	2-Butanone (MEK)	180-68772-1	0.25	0.125	mg/L	U	0.25	52	St Pauls	2017
Premium Solvent	2-Butanone (MEK)	180-65396-1	0.25	0.125	mg/L	U	0.25		Syracuse	2017
Premium Solvent	2-Butanone (MEK)	180-66253-1	0.25	0.125	mg/L	U	0.25		Vinton	2017
Premium Solvent	2-Butanone (MEK)	180-68919-1	0.25	0.125	mg/L	U	0.25		Waukesha	2017
Premium Solvent	2-Butanone (MEK)	180-68924-1	0.25	0.125	mg/L	U	0.25		Waukesha	2017
Premium Solvent	2-Butanone (MEK)	180-68925-1	0.25	0.125	mg/L	U	0.25		Waukesha	2017
Premium Solvent	2-Butanone (MEK)	180-64796-1	0.25	0.125	mg/L	U	0.25		Wichita	2017
Premium Solvent	2-Butanone (MEK)	180-60141-1	0.25	0.125	mg/L	U	0.25		Avon	2017
Premium Solvent	2-Butanone (MEK)	180-59840-1	0.25	0.125	mg/L	U	0.25		Cohoes	2017
Premium Solvent	2-Butanone (MEK)	180-59969-1	0.25	0.125	mg/L	U	0.25		Lackawanna	2017
Premium Solvent	2-Butanone (MEK)	180-60895-1	0.25	0.125	mg/L	U	0.25		Archdale	2017
Premium Solvent	2-Butanone (MEK)	180-60618-1	0.25	0.125	mg/L	U	0.25		Barre	2017
Premium Solvent	2-Butanone (MEK)	180-53962-1	0.5	0.25	mg/L	U	0.5		Kaukauna	2016
Premium Solvent	2-Butanone (MEK)	180-56003-1	0.5	0.25	mg/L	U	0.5		St. Pauls	2016
Premium Solvent	2-Butanone (MEK)	180-76265-1	0.26	0.26	mg/L		0.25		Waukesha	2018
Premium Solvent	2-Butanone (MEK)	180-54679-1	0.48	0.48	mg/L		0.25		Waukesha	2016
Premium Solvent	2-Butanone (MEK)	180-76267-1	0.52	0.52	mg/L		0.25		Waukesha	2018
Premium Solvent	2-Butanone (MEK)	180-74277-1	0.54	0.54	mg/L		0.25		Tallahassee	2018
Premium Solvent	2-Butanone (MEK)	180-77004-1	0.69	0.69	mg/L		0.25		Chandler	2018
Premium Solvent	2-Butanone (MEK)	180-52527-1	0.81	0.81	mg/L		0.25		Boise	2016
Premium Solvent	2-Butanone (MEK)	180-77400-1	0.83	0.83	mg/L		0.25		Archdale	2018
Premium Solvent	2-Butanone (MEK)	180-70392-1	0.89	0.89	mg/L		0.25		Raleigh	2017
Premium Solvent	2-Butanone (MEK)	180-65693-1	0.93	0.93	mg/L		0.25		Avon	2017
Premium Solvent	2-Butanone (MEK)	180-81163-1	1.2	1.2	mg/L		0.25		Barre	2018
Premium Solvent	2-Butanone (MEK)	180-65687-1	1.2	1.2	mg/L		0.25		Archdale	2017
Premium Solvent	2-Butanone (MEK)	180-60012-1	1.6	1.6	mg/L		0.25		Chesapeake	2017
Premium Solvent	2-Butanone (MEK)	180-56685-1	1.8	1.8	mg/L		0.25		Farmington	2016
Premium Solvent	2-Butanone (MEK)	180-77391-1	2.4	2.4	mg/L		0.25		Chester	2018
Premium Solvent	2-Butanone (MEK)	180-58138-1	2.6	2.6	mg/L		0.25		Tampa	2016
Premium Solvent	2-Butanone (MEK)	180-66650-1	2.6	2.6	mg/L		0.25		Albuquerque	2017
Premium Solvent	2-Butanone (MEK)	180-69209-1	2.9	2.9	mg/L		0.25		Clackamas	2017
Premium Solvent	2-Butanone (MEK)	180-58394-1	3.5	3.5	mg/L		0.25		Charlotte	2016

Premium Solvent	2-Butanone (MEK)	180-53961-1	7	7	mg/L		0.25	Kaukauna	2016
Premium Solvent	2-Butanone (MEK)	180-76988-1	9.9	9.9	mg/L		0.25	Salt Lake City	2018
Premium Solvent	2-Butanone (MEK)	180-69242-1	17	17	mg/L		0.25	Oklahoma City	2017
Premium Solvent	2-Butanone (MEK)	180-64613-1	23	23	mg/L		0.25	Chandler	2017
Premium Solvent	2-Butanone (MEK)	180-55533-1	31	31	mg/L		0.5	Syracuse	2016
Premium Solvent	2-Methylphenol	180-58611-1	0.56	0.28	mg/L	U	0.56	Sacremento	2016
Premium Solvent	2-Methylphenol	180-58744-1	1	0.5	mg/L	U	1	Albuquerque	2016
Premium Solvent	2-Methylphenol	180-52527-1	1	0.5	mg/L	U	1	Boise	2016
Premium Solvent	2-Methylphenol	180-53494-1	1	0.5	mg/L	U	1	Chandler	2016
Premium Solvent	2-Methylphenol	180-58394-1	1	0.5	mg/L	U	1	Charlotte	2016
Premium Solvent	2-Methylphenol	180-54771-1	1	0.5	mg/L	U	1	Chester	2016
Premium Solvent	2-Methylphenol	180-58680-1	1	0.5	mg/L	U	1	Clackamas	2016
Premium Solvent	2-Methylphenol	180-56685-1	1	0.5	mg/L	U	1	Farmington	2016
Premium Solvent	2-Methylphenol	180-53961-1	1	0.5	mg/L	U	1	Kaukauna	2016
Premium Solvent	2-Methylphenol	180-53962-1	1	0.5	mg/L	U	1	Kaukauna	2016
Premium Solvent	2-Methylphenol	180-53963-1	1	0.5	mg/L	U	1	Kaukauna	2016
Premium Solvent	2-Methylphenol	180-57964-1	1	0.5	mg/L	U	1	Omaha	2016
Premium Solvent	2-Methylphenol	180-56003-1	1	0.5	mg/L	U	1	St. Pauls	2016
Premium Solvent	2-Methylphenol	180-55533-1	1	0.5	mg/L	U	1	Syracuse	2016
Premium Solvent	2-Methylphenol	180-58138-1	1	0.5	mg/L	U	1	Tampa	2016
Premium Solvent	2-Methylphenol	180-58732-1	1	0.5	mg/L	U	1	Tulsa	2016
Premium Solvent	2-Methylphenol	180-58266-1	1	0.5	mg/L	U	1	Vinton	2016
Premium Solvent	2-Methylphenol	180-54672-1	1	0.5	mg/L	U	1	Waukesha	2016
Premium Solvent	2-Methylphenol	180-54673-1	1	0.5	mg/L	U	1	Waukesha	2016
Premium Solvent	2-Methylphenol	180-54674-1	1	0.5	mg/L	U	1	Waukesha	2016
Premium Solvent	2-Methylphenol	180-54675-1	1	0.5	mg/L	U	1	Waukesha	2016
Premium Solvent	2-Methylphenol	180-54676-1	1	0.5	mg/L	U	1	Waukesha	2016
Premium Solvent	2-Methylphenol	180-54677-1	1	0.5	mg/L	U	1	Waukesha	2016
Premium Solvent	2-Methylphenol	180-54678-1	1	0.5	mg/L	U	1	Waukesha	2016
Premium Solvent	2-Methylphenol	180-54679-1	1	0.5	mg/L	U	1	Waukesha	2016
Premium Solvent	2-Methylphenol	180-54680-1	1	0.5	mg/L	U	1	Waukesha	2016
Premium Solvent	2-Methylphenol	180-66650-1	1	0.5	mg/L	U	1	Albuquerque	2017
Premium Solvent	2-Methylphenol	180-65687-1	1	0.5	mg/L	U	1	Archdale	2017
Premium Solvent	2-Methylphenol	180-65693-1	1	0.5	mg/L	U	1	Avon	2017

Premium Solvent	2-Methylphenol	180-64613-1	1	0.5	mg/L	U	1		Chandler	2017
Premium Solvent	2-Methylphenol	180-70321-1	1	0.5	mg/L	U	1		Chesapeake	2017
Premium Solvent	2-Methylphenol	180-69209-1	1	0.5	mg/L	U	1		Clackamas	2017
Premium Solvent	2-Methylphenol	180-65928-1	1	0.5	mg/L	U	1		Cohoes	2017
Premium Solvent	2-Methylphenol	180-68416-1	1	0.5	mg/L	U	1		Farmington	2017
Premium Solvent	2-Methylphenol	180-70383-1	1	0.5	mg/L	U	1		Grand Island	2017
Premium Solvent	2-Methylphenol	180-64751-1	1	0.5	mg/L	U	1		Kaukauna	2017
Premium Solvent	2-Methylphenol	180-64752-1	1	0.5	mg/L	U	1		Kaukauna	2017
Premium Solvent	2-Methylphenol	180-64753-1	1	0.5	mg/L	U	1		Kaukauna	2017
Premium Solvent	2-Methylphenol	180-65696-1	1	0.5	mg/L	U	1		Lackawanna	2017
Premium Solvent	2-Methylphenol	180-69242-1	1	0.5	mg/L	U	1		Oklahoma City	2017
Premium Solvent	2-Methylphenol	180-69237-1	1	0.5	mg/L	U	1		Omaha	2017
Premium Solvent	2-Methylphenol	180-70392-1	1	0.5	mg/L	U	1		Raleigh	2017
Premium Solvent	2-Methylphenol	180-68772-1	1	0.5	mg/L	U	1		St Pauls	2017
Premium Solvent	2-Methylphenol	180-65396-1	1	0.5	mg/L	U	1		Syracuse	2017
Premium Solvent	2-Methylphenol	180-66253-1	1	0.5	mg/L	U	1		Vinton	2017
Premium Solvent	2-Methylphenol	180-68919-1	1	0.5	mg/L	U	1		Waukesha	2017
Premium Solvent	2-Methylphenol	180-68924-1	1	0.5	mg/L	U	1		Waukesha	2017
Premium Solvent	2-Methylphenol	180-68925-1	1	0.5	mg/L	U	1		Waukesha	2017
Premium Solvent	2-Methylphenol	180-64796-1	1	0.5	mg/L	U	1		Wichita	2017
Premium Solvent	2-Methylphenol	180-60141-1	1	0.5	mg/L	U	1		Avon	2017
Premium Solvent	2-Methylphenol	180-60012-1	1	0.5	mg/L	U	1		Chesapeake	2017
Premium Solvent	2-Methylphenol	180-59840-1	1	0.5	mg/L	U	1	52	Cohoes	2017
Premium Solvent	2-Methylphenol	180-59969-1	1	0.5	mg/L	U	1		Lackawanna	2017
Premium Solvent	2-Methylphenol	180-60895-1	1	0.5	mg/L	U	1		Archdale	2017
Premium Solvent	2-Methylphenol	180-60618-1	1	0.5	mg/L	U	1		Barre	2017
Premium Solvent	2-Methylphenol	180-81014-1	1	0.5	mg/L	U H	1		Albuquerque	2018
Premium Solvent	2-Methylphenol	180-77400-1	1	0.5	mg/L	U	1		Archdale	2018
Premium Solvent	2-Methylphenol	180-80742-1	1	0.5	mg/L	U	1		Avon	2018
Premium Solvent	2-Methylphenol	180-81163-1	1	0.5	mg/L	U	1		Barre	2018
Premium Solvent	2-Methylphenol	180-77125-1	1	0.5	mg/L	U	1		Boise	2018
Premium Solvent	2-Methylphenol	180-77004-1	1	0.5	mg/L	U	1		Chandler	2018
Premium Solvent	2-Methylphenol	180-77391-1	1	0.5	mg/L	U	1		Chester	2018
Premium Solvent	2-Methylphenol	180-82330-1	1	0.5	mg/L	U	1		Clackamas	2018

Premium Solvent	2-Methylphenol	180-77710-1	1	0.5	mg/L	U	1	Cohoes	2018
Premium Solvent	2-Methylphenol	180-81146-1	1	0.5	mg/L	U	1	Farmington	2018
Premium Solvent	2-Methylphenol	180-77381-1	1	0.5	mg/L	U	1	Kaukauna	2018
Premium Solvent	2-Methylphenol	180-77382-1	1	0.5	mg/L	U	1	Kaukauna	2018
Premium Solvent	2-Methylphenol	180-77383-1	1	0.5	mg/L	U	1	Kaukauna	2018
Premium Solvent	2-Methylphenol	180-77070-1	1	0.5	mg/L	U	1	Lackawanna	2018
Premium Solvent	2-Methylphenol	180-80014-1	1	0.5	mg/L	U	1	Oklahoma City	2018
Premium Solvent	2-Methylphenol	180-80848-1	1	0.5	mg/L	U	1	Sacramento	2018
Premium Solvent	2-Methylphenol	180-81823-1	1	0.5	mg/L	U	1	Salisbury	2018
Premium Solvent	2-Methylphenol	180-76988-1	1	0.5	mg/L	U	1	Salt Lake City	2018
Premium Solvent	2-Methylphenol	180-78677-1	1	0.5	mg/L	U	1	Santa Ana	2018
Premium Solvent	2-Methylphenol	180-78463-1	1	0.5	mg/L	U	1	St Pauls	2018
Premium Solvent	2-Methylphenol	180-76683-1	1	0.5	mg/L	U	1	Syracuse	2018
Premium Solvent	2-Methylphenol	180-79370-1	1	0.5	mg/L	U	1	Tampa	2018
Premium Solvent	2-Methylphenol	180-78689-1	1	0.5	mg/L	U	1	Vinton	2018
Premium Solvent	2-Methylphenol	180-76265-1	1	0.5	mg/L	U	1	Waukesha	2018
Premium Solvent	2-Methylphenol	180-76266-1	1	0.5	mg/L	U	1	Waukesha	2018
Premium Solvent	2-Methylphenol	180-76267-1	1	0.5	mg/L	U	1	Waukesha	2018
Premium Solvent	2-Methylphenol	180-76262-1	1	0.5	mg/L	U	1	Wichita	2018
Premium Solvent	2-Methylphenol	180-72259-2	1	0.5	mg/L	U	1	Chester	2018
Premium Solvent	2-Methylphenol	180-72871-1	1	0.5	mg/L	U	1	Sacramento	2018
Premium Solvent	2-Methylphenol	180-71540-1	1	0.5	mg/L	U	1	Salisbury	2018
Premium Solvent	2-Methylphenol	180-71594-1	1	0.5	mg/L	U	1	Santa Ana	2018
Premium Solvent	2-Methylphenol	180-74277-1	1	0.5	mg/L	U	1	Tallahassee	2018
Premium Solvent	2-Methylphenol	180-80012-1	20	10	mg/L	U	20	Oklahoma City	2018
Premium Solvent	Arsenic	180-58744-1	1	0.5	mg/L	U	1	Albuquerque	2016
Premium Solvent	Arsenic	180-52527-1	1	0.5	mg/L	U	1	Boise	2016
Premium Solvent	Arsenic	180-53494-1	1	0.5	mg/L	U	1	Chandler	2016
Premium Solvent	Arsenic	180-58394-1	1	0.5	mg/L	U	1	Charlotte	2016
Premium Solvent	Arsenic	180-54771-1	1	0.5	mg/L	U	1	Chester	2016
Premium Solvent	Arsenic	180-58680-1	1	0.5	mg/L	U	1	Clackamas	2016
Premium Solvent	Arsenic	180-56685-1	1	0.5	mg/L	U	1	Farmington	2016
Premium Solvent	Arsenic	180-53961-1	1	0.5	mg/L	U	1	Kaukauna	2016
Premium Solvent	Arsenic	180-53962-1	1	0.5	mg/L	U	1	Kaukauna	2016

Premium Solvent	Arsenic	180-53963-1	1	0.5	mg/L	U	1	Kaukauna	2016
Premium Solvent	Arsenic	180-57964-1	1	0.5	mg/L	U	1	Omaha	2016
Premium Solvent	Arsenic	180-56003-1	1	0.5	mg/L	U	1	St. Pauls	2016
Premium Solvent	Arsenic	180-55533-1	1	0.5	mg/L	U	1	Syracuse	2016
Premium Solvent	Arsenic	180-58138-1	1	0.5	mg/L	U	1	Tampa	2016
Premium Solvent	Arsenic	180-58732-1	1	0.5	mg/L	U	1	Tulsa	2016
Premium Solvent	Arsenic	180-58266-1	1	0.5	mg/L	U	1	Vinton	2016
Premium Solvent	Arsenic	180-54672-1	1	0.5	mg/L	U	1	Waukesha	2016
Premium Solvent	Arsenic	180-54673-1	1	0.5	mg/L	U	1	Waukesha	2016
Premium Solvent	Arsenic	180-54674-1	1	0.5	mg/L	U	1	Waukesha	2016
Premium Solvent	Arsenic	180-54675-1	1	0.5	mg/L	U	1	Waukesha	2016
Premium Solvent	Arsenic	180-54676-1	1	0.5	mg/L	U	1	Waukesha	2016
Premium Solvent	Arsenic	180-54677-1	1	0.5	mg/L	U	1	Waukesha	2016
Premium Solvent	Arsenic	180-54678-1	1	0.5	mg/L	U	1	Waukesha	2016
Premium Solvent	Arsenic	180-54679-1	1	0.5	mg/L	U	1	Waukesha	2016
Premium Solvent	Arsenic	180-54680-1	1	0.5	mg/L	U	1	Waukesha	2016
Premium Solvent	Arsenic	180-66650-1	1	0.5	mg/L	U	1	Albuquerque	2017
Premium Solvent	Arsenic	180-65687-1	1	0.5	mg/L	U	1	Archdale	2017
Premium Solvent	Arsenic	180-65693-1	1	0.5	mg/L	U	1	Avon	2017
Premium Solvent	Arsenic	180-64613-1	1	0.5	mg/L	U	1	Chandler	2017
Premium Solvent	Arsenic	180-70321-1	1	0.5	mg/L	U	1	Chesapeake	2017
Premium Solvent	Arsenic	180-69209-1	1	0.5	mg/L	U	1	Clackamas	2017
Premium Solvent	Arsenic	180-65928-1	1	0.5	mg/L	U	1	Cohoes	2017
Premium Solvent	Arsenic	180-68416-1	1	0.5	mg/L	U	1	Farmington	2017
Premium Solvent	Arsenic	180-70383-1	1	0.5	mg/L	U	1	Grand Island	2017
Premium Solvent	Arsenic	180-64751-1	1	0.5	mg/L	U	1	Kaukauna	2017
Premium Solvent	Arsenic	180-64752-1	1	0.5	mg/L	U	1	Kaukauna	2017
Premium Solvent	Arsenic	180-64753-1	1	0.5	mg/L	U	1	Kaukauna	2017
Premium Solvent	Arsenic	180-69242-1	1	0.5	mg/L	U	1	Oklahoma City	2017
Premium Solvent	Arsenic	180-69237-1	1	0.5	mg/L	U	1	Omaha	2017
Premium Solvent	Arsenic	180-70392-1	1	0.5	mg/L	U	1	Raleigh	2017
Premium Solvent	Arsenic	180-68772-1	1	0.5	mg/L	U	1	St Pauls	2017
Premium Solvent	Arsenic	180-65396-1	1	0.5	mg/L	U	1	Syracuse	2017
Premium Solvent	Arsenic	180-66253-1	1	0.5	mg/L	U	1	Vinton	2017

Premium Solvent	Arsenic	180-68919-1	1	0.5	mg/L	U	1		Waukesha	2017
Premium Solvent	Arsenic	180-68924-1	1	0.5	mg/L	U	1		Waukesha	2017
Premium Solvent	Arsenic	180-68925-1	1	0.5	mg/L	U	1		Waukesha	2017
Premium Solvent	Arsenic	180-64796-1	1	0.5	mg/L	U	1		Wichita	2017
Premium Solvent	Arsenic	180-60141-1	1	0.5	mg/L	U	1		Avon	2017
Premium Solvent	Arsenic	180-60012-1	1	0.5	mg/L	U	1		Chesapeake	2017
Premium Solvent	Arsenic	180-59840-1	1	0.5	mg/L	U	1		Cohoes	2017
Premium Solvent	Arsenic	180-59969-1	1	0.5	mg/L	U	1		Lackawanna	2017
Premium Solvent	Arsenic	180-60895-1	1	0.5	mg/L	U	1	52	Archdale	2017
Premium Solvent	Arsenic	180-60618-1	1	0.5	mg/L	U	1		Barre	2017
Premium Solvent	Arsenic	180-81014-1	1	0.5	mg/L	U	1		Albuquerque	2018
Premium Solvent	Arsenic	180-77400-1	1	0.5	mg/L	U	1		Archdale	2018
Premium Solvent	Arsenic	180-80742-1	1	0.5	mg/L	U	1		Avon	2018
Premium Solvent	Arsenic	180-81163-1	1	0.5	mg/L	U	1		Barre	2018
Premium Solvent	Arsenic	180-77125-1	1	0.5	mg/L	U	1		Boise	2018
Premium Solvent	Arsenic	180-77004-1	1	0.5	mg/L	U	1		Chandler	2018
Premium Solvent	Arsenic	180-77391-1	1	0.5	mg/L	U	1		Chester	2018
Premium Solvent	Arsenic	180-82330-1	1	0.5	mg/L	U	1		Clackamas	2018
Premium Solvent	Arsenic	180-77710-1	1	0.5	mg/L	U	1		Cohoes	2018
Premium Solvent	Arsenic	180-81146-1	1	0.5	mg/L	U	1		Farmington	2018
Premium Solvent	Arsenic	180-77381-1	1	0.5	mg/L	U	1		Kaukauna	2018
Premium Solvent	Arsenic	180-77382-1	1	0.5	mg/L	U	1		Kaukauna	2018
Premium Solvent	Arsenic	180-77383-1	1	0.5	mg/L	U	1		Kaukauna	2018
Premium Solvent	Arsenic	180-77070-1	1	0.5	mg/L	U	1		Lackawanna	2018
Premium Solvent	Arsenic	180-80012-1	1	0.5	mg/L	U	1		Oklahoma City	2018
Premium Solvent	Arsenic	180-80014-1	1	0.5	mg/L	U	1		Oklahoma City	2018
Premium Solvent	Arsenic	180-80848-1	1	0.5	mg/L	U	1		Sacramento	2018
Premium Solvent	Arsenic	180-81823-1	1	0.5	mg/L	U	1		Salisbury	2018
Premium Solvent	Arsenic	180-76988-1	1	0.5	mg/L	U	1		Salt Lake City	2018
Premium Solvent	Arsenic	180-78677-1	1	0.5	mg/L	U	1		Santa Ana	2018
Premium Solvent	Arsenic	180-78463-1	1	0.5	mg/L	U	1		St Pauls	2018
Premium Solvent	Arsenic	180-76683-1	1	0.5	mg/L	U	1		Syracuse	2018
Premium Solvent	Arsenic	180-79370-1	1	0.5	mg/L	U	1		Tampa	2018
Premium Solvent	Arsenic	180-78689-1	1	0.5	mg/L	U	1		Vinton	2018

Premium Solvent	Arsenic	180-76265-1	1	0.5	mg/L	U ^	1	Waukesha	2018
Premium Solvent	Arsenic	180-76266-1	1	0.5	mg/L	U ^	1	Waukesha	2018
Premium Solvent	Arsenic	180-76267-1	1	0.5	mg/L	U ^	1	Waukesha	2018
Premium Solvent	Arsenic	180-76262-1	1	0.5	mg/L	U ^	1	Wichita	2018
Premium Solvent	Arsenic	180-72259-2	1	0.5	mg/L	U	1	Chester	2018
Premium Solvent	Arsenic	180-72871-1	1	0.5	mg/L	U	1	Sacramento	2018
Premium Solvent	Arsenic	180-71540-1	1	0.5	mg/L	U	1	Salisbury	2018
Premium Solvent	Arsenic	180-71594-1	1	0.5	mg/L	U	1	Santa Ana	2018
Premium Solvent	Arsenic	180-74277-1	1	0.5	mg/L	U	1	Tallahassee	2018
Premium Solvent	Arsenic	180-58611-1	0.57	0.57	mg/L	J	0.63	Sacremento	2016
Premium Solvent	Arsenic	180-65696-1	1.2	1.2	mg/L		1	Lackawanna	2017
Premium Solvent	Barium	180-77381-1	0.12	0.12	mg/L	J B	20	Kaukauna	2018
Premium Solvent	Barium	180-74277-1	0.13	0.13	mg/L	J	20	Tallahassee	2018
Premium Solvent	Barium	180-76265-1	0.14	0.14	mg/L	J	20	Waukesha	2018
Premium Solvent	Barium	180-77400-1	0.15	0.15	mg/L	J B	20	Archdale	2018
Premium Solvent	Barium	180-71540-1	0.15	0.15	mg/L	J	20	Salisbury	2018
Premium Solvent	Barium	180-53961-1	0.16	0.16	mg/L	J	20	Kaukauna	2016
Premium Solvent	Barium	180-76267-1	0.16	0.16	mg/L	J	20	Waukesha	2018
Premium Solvent	Barium	180-54678-1	0.18	0.18	mg/L	J B	20	Waukesha	2016
Premium Solvent	Barium	180-76262-1	0.18	0.18	mg/L	J	20	Wichita	2018
Premium Solvent	Barium	180-80742-1	0.19	0.19	mg/L	J	20	Avon	2018
Premium Solvent	Barium	180-76266-1	0.19	0.19	mg/L	J	20	Waukesha	2018
Premium Solvent	Barium	180-54675-1	0.2	0.2	mg/L	J B	20	Waukesha	2016
Premium Solvent	Barium	180-78463-1	0.23	0.23	mg/L	J	20	St Pauls	2018
Premium Solvent	Barium	180-54674-1	0.24	0.24	mg/L	J B	20	Waukesha	2016
Premium Solvent	Barium	180-69242-1	0.24	0.24	mg/L	J	20	Oklahoma City	2017
Premium Solvent	Barium	180-54679-1	0.25	0.25	mg/L	J B	20	Waukesha	2016
Premium Solvent	Barium	180-77382-1	0.25	0.25	mg/L	J B	20	Kaukauna	2018
Premium Solvent	Barium	180-71594-1	0.26	0.26	mg/L	J	20	Santa Ana	2018
Premium Solvent	Barium	180-72871-1	0.29	0.29	mg/L	J	20	Sacramento	2018
Premium Solvent	Barium	180-54677-1	0.3	0.3	mg/L	J B	20	Waukesha	2016
Premium Solvent	Barium	180-77004-1	0.32	0.32	mg/L	J	20	Chandler	2018
Premium Solvent	Barium	180-60141-1	0.33	0.33	mg/L	J	20	Avon	2017
Premium Solvent	Barium	180-76683-1	0.34	0.34	mg/L	J	20	Syracuse	2018

Premium Solvent	Barium	180-80012-1	0.37	0.37	mg/L	J	20		Oklahoma City	2018
Premium Solvent	Barium	180-64751-1	0.41	0.41	mg/L	J	20		Kaukauna	2017
Premium Solvent	Barium	180-77070-1	0.41	0.41	mg/L	J	20		Lackawanna	2018
Premium Solvent	Barium	180-76988-1	0.41	0.41	mg/L	J	20		Salt Lake City	2018
Premium Solvent	Barium	180-54676-1	0.43	0.43	mg/L	J B	20		Waukesha	2016
Premium Solvent	Barium	180-78689-1	0.48	0.48	mg/L	J	20		Vinton	2018
Premium Solvent	Barium	180-70383-1	0.51	0.51	mg/L	J	20		Grand Island	2017
Premium Solvent	Barium	180-68919-1	0.51	0.51	mg/L	J	20		Waukesha	2017
Premium Solvent	Barium	180-54771-1	0.61	0.61	mg/L	J	20		Chester	2016
Premium Solvent	Barium	180-58744-1	0.63	0.63	mg/L	J	20		Albuquerque	2016
Premium Solvent	Barium	180-53494-1	0.66	0.66	mg/L	J B	20		Chandler	2016
Premium Solvent	Barium	180-81163-1	0.67	0.67	mg/L	J	20		Barre	2018
Premium Solvent	Barium	180-52527-1	0.72	0.72	mg/L	J	20		Boise	2016
Premium Solvent	Barium	180-53962-1	0.73	0.73	mg/L	J	20		Kaukauna	2016
Premium Solvent	Barium	180-54672-1	0.73	0.73	mg/L	J B	20		Waukesha	2016
Premium Solvent	Barium	180-77391-1	0.78	0.78	mg/L	J B	20		Chester	2018
Premium Solvent	Barium	180-72259-2	0.83	0.83	mg/L	J	20		Chester	2018
Premium Solvent	Barium	180-68925-1	1	1	mg/L	J	20		Waukesha	2017
Premium Solvent	Barium	180-65928-1	1.1	1.1	mg/L	J	20		Cohoes	2017
Premium Solvent	Barium	180-60012-1	1.1	1.1	mg/L	J	20		Chesapeake	2017
Premium Solvent	Barium	180-77125-1	1.2	1.2	mg/L	J	20		Boise	2018
Premium Solvent	Barium	180-81146-1	1.5	1.5	mg/L	J	20		Farmington	2018
Premium Solvent	Barium	180-54680-1	1.6	1.6	mg/L	J B	20		Waukesha	2016
Premium Solvent	Barium	180-60618-1	1.6	1.6	mg/L	J	20		Barre	2017
Premium Solvent	Barium	180-54673-1	1.8	1.8	mg/L	J B	20		Waukesha	2016
Premium Solvent	Barium	180-55533-1	2.3	2.3	mg/L	J	20		Syracuse	2016
Premium Solvent	Barium	180-69237-1	2.5	2.5	mg/L	J	20		Omaha	2017
Premium Solvent	Barium	180-64752-1	3.2	3.2	mg/L	J	20		Kaukauna	2017
Premium Solvent	Barium	180-58611-1	12	6	mg/L	U	12	52	Sacremento	2016
Premium Solvent	Barium	180-53963-1	6.8	6.8	mg/L	J	20		Kaukauna	2016
Premium Solvent	Barium	180-66253-1	8.7	8.7	mg/L	J	20		Vinton	2017
Premium Solvent	Barium	180-58394-1	20	10	mg/L	U	20		Charlotte	2016
Premium Solvent	Barium	180-58680-1	20	10	mg/L	U	20		Clackamas	2016
Premium Solvent	Barium	180-56685-1	20	10	mg/L	U	20		Farmington	2016

Premium Solvent	Barium	180-57964-1	20	10	mg/L	U	20	Omaha	2016
Premium Solvent	Barium	180-56003-1	20	10	mg/L	U	20	St. Pauls	2016
Premium Solvent	Barium	180-58138-1	20	10	mg/L	U	20	Tampa	2016
Premium Solvent	Barium	180-58732-1	20	10	mg/L	U	20	Tulsa	2016
Premium Solvent	Barium	180-58266-1	20	10	mg/L	U	20	Vinton	2016
Premium Solvent	Barium	180-66650-1	20	10	mg/L	U	20	Albuquerque	2017
Premium Solvent	Barium	180-65687-1	20	10	mg/L	U	20	Archdale	2017
Premium Solvent	Barium	180-65693-1	20	10	mg/L	U	20	Avon	2017
Premium Solvent	Barium	180-64613-1	20	10	mg/L	U	20	Chandler	2017
Premium Solvent	Barium	180-70321-1	20	10	mg/L	U	20	Chesapeake	2017
Premium Solvent	Barium	180-69209-1	20	10	mg/L	U	20	Clackamas	2017
Premium Solvent	Barium	180-68416-1	20	10	mg/L	U	20	Farmington	2017
Premium Solvent	Barium	180-64753-1	20	10	mg/L	U	20	Kaukauna	2017
Premium Solvent	Barium	180-70392-1	20	10	mg/L	U	20	Raleigh	2017
Premium Solvent	Barium	180-68772-1	20	10	mg/L	U	20	St Pauls	2017
Premium Solvent	Barium	180-65396-1	20	10	mg/L	U	20	Syracuse	2017
Premium Solvent	Barium	180-68924-1	20	10	mg/L	U	20	Waukesha	2017
Premium Solvent	Barium	180-64796-1	20	10	mg/L	U	20	Wichita	2017
Premium Solvent	Barium	180-59840-1	20	10	mg/L	U	20	Cohoes	2017
Premium Solvent	Barium	180-59969-1	20	10	mg/L	U	20	Lackawanna	2017
Premium Solvent	Barium	180-60895-1	20	10	mg/L	U	20	Archdale	2017
Premium Solvent	Barium	180-81014-1	20	10	mg/L	U	20	Albuquerque	2018
Premium Solvent	Barium	180-82330-1	20	10	mg/L	U	20	Clackamas	2018
Premium Solvent	Barium	180-77710-1	20	10	mg/L	U	20	Cohoes	2018
Premium Solvent	Barium	180-77383-1	20	10	mg/L	U	20	Kaukauna	2018
Premium Solvent	Barium	180-80014-1	20	10	mg/L	U	20	Oklahoma City	2018
Premium Solvent	Barium	180-80848-1	20	10	mg/L	U	20	Sacramento	2018
Premium Solvent	Barium	180-81823-1	20	10	mg/L	U	20	Salisbury	2018
Premium Solvent	Barium	180-78677-1	20	10	mg/L	U	20	Santa Ana	2018
Premium Solvent	Barium	180-79370-1	20	10	mg/L	U	20	Tampa	2018
Premium Solvent	Barium	180-65696-1	66	66	mg/L		20	Lackawanna	2017
Premium Solvent	Benzene	180-81014-1	0.11	0.11	mg/L	J H	0.25	Albuquerque	2018
Premium Solvent	Benzene	180-58611-1	0.23	0.115	mg/L	U	0.23	Sacremento	2016
Premium Solvent	Benzene	180-78689-1	0.12	0.12	mg/L	J	0.25	Vinton	2018

Premium Solvent	Benzene	180-53494-1	0.25	0.125	mg/L	U	0.25	Chandler	2016
Premium Solvent	Benzene	180-58394-1	0.25	0.125	mg/L	U	0.25	Charlotte	2016
Premium Solvent	Benzene	180-56685-1	0.25	0.125	mg/L	U	0.25	Farmington	2016
Premium Solvent	Benzene	180-53961-1	0.25	0.125	mg/L	U	0.25	Kaukauna	2016
Premium Solvent	Benzene	180-53963-1	0.25	0.125	mg/L	U	0.25	Kaukauna	2016
Premium Solvent	Benzene	180-57964-1	0.25	0.125	mg/L	U	0.25	Omaha	2016
Premium Solvent	Benzene	180-58732-1	0.25	0.125	mg/L	U	0.25	Tulsa	2016
Premium Solvent	Benzene	180-54672-1	0.25	0.125	mg/L	U	0.25	Waukesha	2016
Premium Solvent	Benzene	180-54674-1	0.25	0.125	mg/L	U	0.25	Waukesha	2016
Premium Solvent	Benzene	180-54675-1	0.25	0.125	mg/L	U	0.25	Waukesha	2016
Premium Solvent	Benzene	180-54676-1	0.25	0.125	mg/L	U	0.25	Waukesha	2016
Premium Solvent	Benzene	180-54678-1	0.25	0.125	mg/L	U	0.25	Waukesha	2016
Premium Solvent	Benzene	180-54679-1	0.25	0.125	mg/L	U	0.25	Waukesha	2016
Premium Solvent	Benzene	180-66650-1	0.25	0.125	mg/L	U	0.25	Albuquerque	2017
Premium Solvent	Benzene	180-65687-1	0.25	0.125	mg/L	U	0.25	Archdale	2017
Premium Solvent	Benzene	180-65693-1	0.25	0.125	mg/L	U	0.25	Avon	2017
Premium Solvent	Benzene	180-64613-1	0.25	0.125	mg/L	U	0.25	Chandler	2017
Premium Solvent	Benzene	180-70321-1	0.25	0.125	mg/L	U	0.25	Chesapeake	2017
Premium Solvent	Benzene	180-69209-1	0.25	0.125	mg/L	U	0.25	Clackamas	2017
Premium Solvent	Benzene	180-65928-1	0.25	0.125	mg/L	U	0.25	Cohoes	2017
Premium Solvent	Benzene	180-68416-1	0.25	0.125	mg/L	U	0.25	Farmington	2017
Premium Solvent	Benzene	180-70383-1	0.25	0.125	mg/L	U	0.25	Grand Island	2017
Premium Solvent	Benzene	180-64751-1	0.25	0.125	mg/L	U	0.25	Kaukauna	2017
Premium Solvent	Benzene	180-64753-1	0.25	0.125	mg/L	U	0.25	Kaukauna	2017
Premium Solvent	Benzene	180-65696-1	0.25	0.125	mg/L	U	0.25	Lackawanna	2017
Premium Solvent	Benzene	180-69242-1	0.25	0.125	mg/L	U	0.25	Oklahoma City	2017
Premium Solvent	Benzene	180-69237-1	0.25	0.125	mg/L	U	0.25	Omaha	2017
Premium Solvent	Benzene	180-70392-1	0.25	0.125	mg/L	U	0.25	Raleigh	2017
Premium Solvent	Benzene	180-65396-1	0.25	0.125	mg/L	U	0.25	Syracuse	2017
Premium Solvent	Benzene	180-66253-1	0.25	0.125	mg/L	U	0.25	Vinton	2017
Premium Solvent	Benzene	180-68919-1	0.25	0.125	mg/L	U	0.25	Waukesha	2017
Premium Solvent	Benzene	180-68924-1	0.25	0.125	mg/L	U	0.25	Waukesha	2017
Premium Solvent	Benzene	180-68925-1	0.25	0.125	mg/L	U	0.25	Waukesha	2017
Premium Solvent	Benzene	180-60141-1	0.25	0.125	mg/L	U	0.25	Avon	2017

Premium Solvent	Benzene	180-60012-1	0.25	0.125	mg/L	U	0.25		Chesapeake	2017
Premium Solvent	Benzene	180-59840-1	0.25	0.125	mg/L	U	0.25		Cohoes	2017
Premium Solvent	Benzene	180-59969-1	0.25	0.125	mg/L	U	0.25		Lackawanna	2017
Premium Solvent	Benzene	180-60895-1	0.25	0.125	mg/L	U	0.25		Archdale	2017
Premium Solvent	Benzene	180-77400-1	0.25	0.125	mg/L	U	0.25		Archdale	2018
Premium Solvent	Benzene	180-80742-1	0.25	0.125	mg/L	U	0.25		Avon	2018
Premium Solvent	Benzene	180-77004-1	0.25	0.125	mg/L	U	0.25		Chandler	2018
Premium Solvent	Benzene	180-82330-1	0.25	0.125	mg/L	U	0.25		Clackamas	2018
Premium Solvent	Benzene	180-77710-1	0.25	0.125	mg/L	U	0.25		Cohoes	2018
Premium Solvent	Benzene	180-77381-1	0.25	0.125	mg/L	U	0.25		Kaukauna	2018
Premium Solvent	Benzene	180-77382-1	0.25	0.125	mg/L	U	0.25		Kaukauna	2018
Premium Solvent	Benzene	180-77383-1	0.25	0.125	mg/L	U	0.25		Kaukauna	2018
Premium Solvent	Benzene	180-80012-1	0.25	0.125	mg/L	U	0.25		Oklahoma City	2018
Premium Solvent	Benzene	180-80014-1	0.25	0.125	mg/L	U	0.25		Oklahoma City	2018
Premium Solvent	Benzene	180-80848-1	0.25	0.125	mg/L	U	0.25	52	Sacramento	2018
Premium Solvent	Benzene	180-78677-1	0.25	0.125	mg/L	U	0.25		Santa Ana	2018
Premium Solvent	Benzene	180-78463-1	0.25	0.125	mg/L	U	0.25		St Pauls	2018
Premium Solvent	Benzene	180-79370-1	0.25	0.125	mg/L	U	0.25		Tampa	2018
Premium Solvent	Benzene	180-76265-1	0.25	0.125	mg/L	U	0.25		Waukesha	2018
Premium Solvent	Benzene	180-76267-1	0.25	0.125	mg/L	U	0.25		Waukesha	2018
Premium Solvent	Benzene	180-76262-1	0.25	0.125	mg/L	U	0.25		Wichita	2018
Premium Solvent	Benzene	180-72259-2	0.25	0.125	mg/L	U	0.25		Chester	2018
Premium Solvent	Benzene	180-74277-1	0.25	0.125	mg/L	U	0.25		Tallahassee	2018
Premium Solvent	Benzene	180-76266-1	0.16	0.16	mg/L	J	0.25		Waukesha	2018
Premium Solvent	Benzene	180-53962-1	0.5	0.25	mg/L	U	0.5		Kaukauna	2016
Premium Solvent	Benzene	180-56003-1	0.5	0.25	mg/L	U	0.5		St. Pauls	2016
Premium Solvent	Benzene	180-76988-1	0.27	0.27	mg/L		0.25		Salt Lake City	2018
Premium Solvent	Benzene	180-54680-1	0.31	0.31	mg/L		0.25		Waukesha	2016
Premium Solvent	Benzene	180-54677-1	0.33	0.33	mg/L		0.25		Waukesha	2016
Premium Solvent	Benzene	180-77391-1	0.35	0.35	mg/L		0.25		Chester	2018
Premium Solvent	Benzene	180-54673-1	0.43	0.43	mg/L		0.25		Waukesha	2016
Premium Solvent	Benzene	180-64796-1	0.43	0.43	mg/L		0.25		Wichita	2017
Premium Solvent	Benzene	180-77125-1	0.43	0.43	mg/L		0.25		Boise	2018
Premium Solvent	Benzene	180-72871-1	0.45	0.45	mg/L		0.25		Sacramento	2018

Premium Solvent	Benzene	180-81823-1	0.49	0.49	mg/L		0.25	Salisbury	2018
Premium Solvent	Benzene	180-81146-1	0.53	0.53	mg/L		0.25	Farmington	2018
Premium Solvent	Benzene	180-68772-1	0.58	0.58	mg/L		0.25	St Pauls	2017
Premium Solvent	Benzene	180-58744-1	0.7	0.7	mg/L		0.25	Albuquerque	2016
Premium Solvent	Benzene	180-52527-1	0.85	0.85	mg/L		0.25	Boise	2016
Premium Solvent	Benzene	180-54771-1	1.1	1.1	mg/L		0.25	Chester	2016
Premium Solvent	Benzene	180-64752-1	1.3	1.3	mg/L		0.25	Kaukauna	2017
Premium Solvent	Benzene	180-71594-1	1.4	1.4	mg/L		0.25	Santa Ana	2018
Premium Solvent	Benzene	180-76683-1	2.4	2.4	mg/L		0.25	Syracuse	2018
Premium Solvent	Benzene	180-55533-1	2.7	2.7	mg/L		0.5	Syracuse	2016
Premium Solvent	Benzene	180-58680-1	3.1	3.1	mg/L		0.25	Clackamas	2016
Premium Solvent	Benzene	180-71540-1	4.8	4.8	mg/L		0.25	Salisbury	2018
Premium Solvent	Benzene	180-77070-1	7	7	mg/L		0.25	Lackawanna	2018
Premium Solvent	Benzene	180-58266-1	7.3	7.3	mg/L		0.25	Vinton	2016
Premium Solvent	Benzene	180-58138-1	21	21	mg/L		0.25	Tampa	2016
Premium Solvent	Benzene	180-81163-1	26	26	mg/L		0.25	Barre	2018
Premium Solvent	Benzene	180-60618-1	33	33	mg/L		0.25	Barre	2017
Premium Solvent	Cadmium	180-68772-1	0.016	0.016	mg/L	J B	0.5	St Pauls	2017
Premium Solvent	Cadmium	180-77383-1	0.016	0.016	mg/L	J	0.5	Kaukauna	2018
Premium Solvent	Cadmium	180-69209-1	0.017	0.017	mg/L	J B	0.5	Clackamas	2017
Premium Solvent	Cadmium	180-68919-1	0.017	0.017	mg/L	J B	0.5	Waukesha	2017
Premium Solvent	Cadmium	180-77381-1	0.017	0.017	mg/L	J	0.5	Kaukauna	2018
Premium Solvent	Cadmium	180-80014-1	0.018	0.018	mg/L	J	0.5	Oklahoma City	2018
Premium Solvent	Cadmium	180-74277-1	0.018	0.018	mg/L	J B	0.5	Tallahassee	2018
Premium Solvent	Cadmium	180-71594-1	0.019	0.019	mg/L	J B	0.5	Santa Ana	2018
Premium Solvent	Cadmium	180-60895-1	0.02	0.02	mg/L	J	0.5	Archdale	2017
Premium Solvent	Cadmium	180-76266-1	0.02	0.02	mg/L	J	0.5	Waukesha	2018
Premium Solvent	Cadmium	180-69237-1	0.021	0.021	mg/L	J	0.5	Omaha	2017
Premium Solvent	Cadmium	180-59840-1	0.021	0.021	mg/L	J	0.5	Cohoes	2017
Premium Solvent	Cadmium	180-80012-1	0.021	0.021	mg/L	J B	0.5	Oklahoma City	2018
Premium Solvent	Cadmium	180-76267-1	0.022	0.022	mg/L	J	0.5	Waukesha	2018
Premium Solvent	Cadmium	180-70321-1	0.023	0.023	mg/L	J	0.5	Chesapeake	2017
Premium Solvent	Cadmium	180-71540-1	0.023	0.023	mg/L	J B	0.5	Salisbury	2018
Premium Solvent	Cadmium	180-76265-1	0.024	0.024	mg/L	J	0.5	Waukesha	2018

Premium Solvent	Cadmium	180-76262-1	0.024	0.024	mg/L	J	0.5	Wichita	2018
Premium Solvent	Cadmium	180-53962-1	0.026	0.026	mg/L	J	0.5	Kaukauna	2016
Premium Solvent	Cadmium	180-54679-1	0.026	0.026	mg/L	J	0.5	Waukesha	2016
Premium Solvent	Cadmium	180-52527-1	0.028	0.028	mg/L	J	0.5	Boise	2016
Premium Solvent	Cadmium	180-54678-1	0.029	0.029	mg/L	J	0.5	Waukesha	2016
Premium Solvent	Cadmium	180-79370-1	0.029	0.029	mg/L	J B	0.5	Tampa	2018
Premium Solvent	Cadmium	180-58611-1	0.03	0.03	mg/L	J	0.29	Sacremento	2016
Premium Solvent	Cadmium	180-81146-1	0.031	0.031	mg/L	J	0.5	Farmington	2018
Premium Solvent	Cadmium	180-57964-1	0.033	0.033	mg/L	J	0.5	Omaha	2016
Premium Solvent	Cadmium	180-58266-1	0.033	0.033	mg/L	J	0.5	Vinton	2016
Premium Solvent	Cadmium	180-54674-1	0.033	0.033	mg/L	J	0.5	Waukesha	2016
Premium Solvent	Cadmium	180-77070-1	0.033	0.033	mg/L	J B	0.5	Lackawanna	2018
Premium Solvent	Cadmium	180-60141-1	0.034	0.034	mg/L	J B	0.5	Avon	2017
Premium Solvent	Cadmium	180-64753-1	0.035	0.035	mg/L	J	0.5	Kaukauna	2017
Premium Solvent	Cadmium	180-78689-1	0.036	0.036	mg/L	J	0.5	Vinton	2018
Premium Solvent	Cadmium	180-68416-1	0.042	0.042	mg/L	J	0.5	Farmington	2017
Premium Solvent	Cadmium	180-64796-1	0.045	0.045	mg/L	J	0.5	Wichita	2017
Premium Solvent	Cadmium	180-59969-1	0.045	0.045	mg/L	J	0.5	Lackawanna	2017
Premium Solvent	Cadmium	180-53963-1	0.048	0.048	mg/L	J	0.5	Kaukauna	2016
Premium Solvent	Cadmium	180-55533-1	0.048	0.048	mg/L	J	0.5	Syracuse	2016
Premium Solvent	Cadmium	180-66253-1	0.051	0.051	mg/L	J B	0.5	Vinton	2017
Premium Solvent	Cadmium	180-76683-1	0.053	0.053	mg/L	J	0.5	Syracuse	2018
Premium Solvent	Cadmium	180-58744-1	0.054	0.054	mg/L	J	0.5	Albuquerque	2016
Premium Solvent	Cadmium	180-77004-1	0.055	0.055	mg/L	J B	0.5	Chandler	2018
Premium Solvent	Cadmium	180-65396-1	0.06	0.06	mg/L	J B	0.5	Syracuse	2017
Premium Solvent	Cadmium	180-77391-1	0.061	0.061	mg/L	J	0.5	Chester	2018
Premium Solvent	Cadmium	180-72259-2	0.061	0.061	mg/L	J B	0.5	Chester	2018
Premium Solvent	Cadmium	180-54771-1	0.067	0.067	mg/L	J	0.5	Chester	2016
Premium Solvent	Cadmium	180-54677-1	0.074	0.074	mg/L	J	0.5	Waukesha	2016
Premium Solvent	Cadmium	180-70383-1	0.1	0.1	mg/L	J	0.5	Grand Island	2017
Premium Solvent	Cadmium	180-81163-1	0.13	0.13	mg/L	J	0.5	Barre	2018
Premium Solvent	Cadmium	180-65928-1	0.14	0.14	mg/L	J	0.5	Cohoes	2017
Premium Solvent	Cadmium	180-68925-1	0.2	0.2	mg/L	J B	0.5	Waukesha	2017
Premium Solvent	Cadmium	180-53494-1	0.5	0.25	mg/L	U	0.5	Chandler	2016

Premium Solvent	Cadmium	180-58394-1	0.5	0.25	mg/L	U	0.5	52	Charlotte	2016
Premium Solvent	Cadmium	180-58680-1	0.5	0.25	mg/L	U	0.5		Clackamas	2016
Premium Solvent	Cadmium	180-56685-1	0.5	0.25	mg/L	U	0.5		Farmington	2016
Premium Solvent	Cadmium	180-53961-1	0.5	0.25	mg/L	U	0.5		Kaukauna	2016
Premium Solvent	Cadmium	180-56003-1	0.5	0.25	mg/L	U	0.5		St. Pauls	2016
Premium Solvent	Cadmium	180-58138-1	0.5	0.25	mg/L	U	0.5		Tampa	2016
Premium Solvent	Cadmium	180-58732-1	0.5	0.25	mg/L	U	0.5		Tulsa	2016
Premium Solvent	Cadmium	180-54672-1	0.5	0.25	mg/L	U	0.5		Waukesha	2016
Premium Solvent	Cadmium	180-54675-1	0.5	0.25	mg/L	U	0.5		Waukesha	2016
Premium Solvent	Cadmium	180-54676-1	0.5	0.25	mg/L	U	0.5		Waukesha	2016
Premium Solvent	Cadmium	180-66650-1	0.5	0.25	mg/L	U	0.5		Albuquerque	2017
Premium Solvent	Cadmium	180-65687-1	0.5	0.25	mg/L	U	0.5		Archdale	2017
Premium Solvent	Cadmium	180-65693-1	0.5	0.25	mg/L	U	0.5		Avon	2017
Premium Solvent	Cadmium	180-64613-1	0.5	0.25	mg/L	U	0.5		Chandler	2017
Premium Solvent	Cadmium	180-64751-1	0.5	0.25	mg/L	U	0.5		Kaukauna	2017
Premium Solvent	Cadmium	180-69242-1	0.5	0.25	mg/L	U	0.5		Oklahoma City	2017
Premium Solvent	Cadmium	180-70392-1	0.5	0.25	mg/L	U	0.5		Raleigh	2017
Premium Solvent	Cadmium	180-68924-1	0.5	0.25	mg/L	U	0.5		Waukesha	2017
Premium Solvent	Cadmium	180-60012-1	0.5	0.25	mg/L	U	0.5		Chesapeake	2017
Premium Solvent	Cadmium	180-81014-1	0.5	0.25	mg/L	U	0.5		Albuquerque	2018
Premium Solvent	Cadmium	180-80742-1	0.5	0.25	mg/L	U	0.5		Avon	2018
Premium Solvent	Cadmium	180-82330-1	0.5	0.25	mg/L	U	0.5		Clackamas	2018
Premium Solvent	Cadmium	180-77710-1	0.5	0.25	mg/L	U	0.5		Cohoes	2018
Premium Solvent	Cadmium	180-77382-1	0.5	0.25	mg/L	U	0.5		Kaukauna	2018
Premium Solvent	Cadmium	180-80848-1	0.5	0.25	mg/L	U	0.5		Sacramento	2018
Premium Solvent	Cadmium	180-81823-1	0.5	0.25	mg/L	U	0.5		Salisbury	2018
Premium Solvent	Cadmium	180-76988-1	0.25	0.25	mg/L	J B	0.5		Salt Lake City	2018
Premium Solvent	Cadmium	180-78677-1	0.5	0.25	mg/L	U	0.5		Santa Ana	2018
Premium Solvent	Cadmium	180-78463-1	0.5	0.25	mg/L	U	0.5		St Pauls	2018
Premium Solvent	Cadmium	180-77400-1	0.26	0.26	mg/L	J	0.5		Archdale	2018
Premium Solvent	Cadmium	180-64752-1	0.29	0.29	mg/L	J	0.5		Kaukauna	2017
Premium Solvent	Cadmium	180-65696-1	0.53	0.53	mg/L		0.5		Lackawanna	2017
Premium Solvent	Cadmium	180-72871-1	0.57	0.57	mg/L		0.5		Sacramento	2018
Premium Solvent	Cadmium	180-60618-1	0.63	0.63	mg/L		0.5		Barre	2017

Premium Solvent	Cadmium	180-54680-1	0.85	0.85	mg/L		0.5	Waukesha	2016
Premium Solvent	Cadmium	180-54673-1	0.98	0.98	mg/L		0.5	Waukesha	2016
Premium Solvent	Cadmium	180-77125-1	0.99	0.99	mg/L	B	0.5	Boise	2018
Premium Solvent	Carbon Tetrachloride	180-58611-1	0.23	0.115	mg/L	U	0.23	Sacremento	2016
Premium Solvent	Carbon Tetrachloride	180-58744-1	0.25	0.125	mg/L	U	0.25	Albuquerque	2016
Premium Solvent	Carbon Tetrachloride	180-52527-1	0.25	0.125	mg/L	U	0.25	Boise	2016
Premium Solvent	Carbon Tetrachloride	180-53494-1	0.25	0.125	mg/L	U	0.25	Chandler	2016
Premium Solvent	Carbon Tetrachloride	180-58394-1	0.25	0.125	mg/L	U	0.25	Charlotte	2016
Premium Solvent	Carbon Tetrachloride	180-54771-1	0.25	0.125	mg/L	U	0.25	Chester	2016
Premium Solvent	Carbon Tetrachloride	180-58680-1	0.25	0.125	mg/L	U	0.25	Clackamas	2016
Premium Solvent	Carbon Tetrachloride	180-56685-1	0.25	0.125	mg/L	U	0.25	Farmington	2016
Premium Solvent	Carbon Tetrachloride	180-53961-1	0.25	0.125	mg/L	U	0.25	Kaukauna	2016
Premium Solvent	Carbon Tetrachloride	180-53963-1	0.25	0.125	mg/L	U	0.25	Kaukauna	2016
Premium Solvent	Carbon Tetrachloride	180-57964-1	0.25	0.125	mg/L	U	0.25	Omaha	2016
Premium Solvent	Carbon Tetrachloride	180-58138-1	0.25	0.125	mg/L	U	0.25	Tampa	2016
Premium Solvent	Carbon Tetrachloride	180-58732-1	0.25	0.125	mg/L	U	0.25	Tulsa	2016
Premium Solvent	Carbon Tetrachloride	180-58266-1	0.25	0.125	mg/L	U	0.25	Vinton	2016
Premium Solvent	Carbon Tetrachloride	180-54672-1	0.25	0.125	mg/L	U	0.25	Waukesha	2016
Premium Solvent	Carbon Tetrachloride	180-54673-1	0.25	0.125	mg/L	U	0.25	Waukesha	2016
Premium Solvent	Carbon Tetrachloride	180-54674-1	0.25	0.125	mg/L	U	0.25	Waukesha	2016
Premium Solvent	Carbon Tetrachloride	180-54675-1	0.25	0.125	mg/L	U	0.25	Waukesha	2016
Premium Solvent	Carbon Tetrachloride	180-54676-1	0.25	0.125	mg/L	U	0.25	Waukesha	2016
Premium Solvent	Carbon Tetrachloride	180-54677-1	0.25	0.125	mg/L	U	0.25	Waukesha	2016
Premium Solvent	Carbon Tetrachloride	180-54678-1	0.25	0.125	mg/L	U	0.25	Waukesha	2016
Premium Solvent	Carbon Tetrachloride	180-54679-1	0.25	0.125	mg/L	U	0.25	Waukesha	2016
Premium Solvent	Carbon Tetrachloride	180-54680-1	0.25	0.125	mg/L	U	0.25	Waukesha	2016
Premium Solvent	Carbon tetrachloride	180-66650-1	0.25	0.125	mg/L	U	0.25	Albuquerque	2017
Premium Solvent	Carbon tetrachloride	180-65687-1	0.25	0.125	mg/L	U	0.25	Archdale	2017
Premium Solvent	Carbon tetrachloride	180-65693-1	0.25	0.125	mg/L	U	0.25	Avon	2017
Premium Solvent	Carbon tetrachloride	180-64613-1	0.25	0.125	mg/L	U	0.25	Chandler	2017
Premium Solvent	Carbon tetrachloride	180-70321-1	0.25	0.125	mg/L	U	0.25	Chesapeake	2017
Premium Solvent	Carbon tetrachloride	180-69209-1	0.25	0.125	mg/L	U	0.25	Clackamas	2017
Premium Solvent	Carbon tetrachloride	180-65928-1	0.25	0.125	mg/L	U	0.25	Cohoes	2017
Premium Solvent	Carbon tetrachloride	180-68416-1	0.25	0.125	mg/L	U	0.25	Farmington	2017

Premium Solvent	Carbon tetrachloride	180-70383-1	0.25	0.125	mg/L	U	0.25		Grand Island	2017
Premium Solvent	Carbon tetrachloride	180-64751-1	0.25	0.125	mg/L	U	0.25		Kaukauna	2017
Premium Solvent	Carbon tetrachloride	180-64752-1	0.25	0.125	mg/L	U	0.25		Kaukauna	2017
Premium Solvent	Carbon tetrachloride	180-64753-1	0.25	0.125	mg/L	U	0.25		Kaukauna	2017
Premium Solvent	Carbon tetrachloride	180-65696-1	0.25	0.125	mg/L	U	0.25		Lackawanna	2017
Premium Solvent	Carbon tetrachloride	180-69242-1	0.25	0.125	mg/L	U	0.25		Oklahoma City	2017
Premium Solvent	Carbon tetrachloride	180-69237-1	0.25	0.125	mg/L	U	0.25		Omaha	2017
Premium Solvent	Carbon tetrachloride	180-70392-1	0.25	0.125	mg/L	U	0.25		Raleigh	2017
Premium Solvent	Carbon tetrachloride	180-68772-1	0.25	0.125	mg/L	U	0.25		St Pauls	2017
Premium Solvent	Carbon tetrachloride	180-65396-1	0.25	0.125	mg/L	U	0.25		Syracuse	2017
Premium Solvent	Carbon tetrachloride	180-66253-1	0.25	0.125	mg/L	U	0.25		Vinton	2017
Premium Solvent	Carbon tetrachloride	180-68919-1	0.25	0.125	mg/L	U	0.25		Waukesha	2017
Premium Solvent	Carbon tetrachloride	180-68924-1	0.25	0.125	mg/L	U	0.25		Waukesha	2017
Premium Solvent	Carbon tetrachloride	180-68925-1	0.25	0.125	mg/L	U	0.25		Waukesha	2017
Premium Solvent	Carbon tetrachloride	180-64796-1	0.25	0.125	mg/L	U	0.25		Wichita	2017
Premium Solvent	Carbon tetrachloride	180-60141-1	0.25	0.125	mg/L	U	0.25		Avon	2017
Premium Solvent	Carbon tetrachloride	180-60012-1	0.25	0.125	mg/L	U	0.25		Chesapeake	2017
Premium Solvent	Carbon tetrachloride	180-59840-1	0.25	0.125	mg/L	U	0.25		Cohoes	2017
Premium Solvent	Carbon tetrachloride	180-59969-1	0.25	0.125	mg/L	U	0.25		Lackawanna	2017
Premium Solvent	Carbon tetrachloride	180-60895-1	0.25	0.125	mg/L	U	0.25		Archdale	2017
Premium Solvent	Carbon tetrachloride	180-60618-1	0.25	0.125	mg/L	U	0.25	52	Barre	2017
Premium Solvent	Carbon tetrachloride	180-81014-1	0.25	0.125	mg/L	U H	0.25		Albuquerque	2018
Premium Solvent	Carbon tetrachloride	180-77400-1	0.25	0.125	mg/L	U	0.25		Archdale	2018
Premium Solvent	Carbon tetrachloride	180-80742-1	0.25	0.125	mg/L	U	0.25		Avon	2018
Premium Solvent	Carbon tetrachloride	180-81163-1	0.25	0.125	mg/L	U	0.25		Barre	2018
Premium Solvent	Carbon tetrachloride	180-77125-1	0.25	0.125	mg/L	U	0.25		Boise	2018
Premium Solvent	Carbon tetrachloride	180-77004-1	0.25	0.125	mg/L	U	0.25		Chandler	2018
Premium Solvent	Carbon tetrachloride	180-77391-1	0.25	0.125	mg/L	U	0.25		Chester	2018
Premium Solvent	Carbon tetrachloride	180-82330-1	0.25	0.125	mg/L	U	0.25		Clackamas	2018
Premium Solvent	Carbon tetrachloride	180-77710-1	0.25	0.125	mg/L	U	0.25		Cohoes	2018
Premium Solvent	Carbon tetrachloride	180-81146-1	0.25	0.125	mg/L	U	0.25		Farmington	2018
Premium Solvent	Carbon tetrachloride	180-77381-1	0.25	0.125	mg/L	U	0.25		Kaukauna	2018
Premium Solvent	Carbon tetrachloride	180-77382-1	0.25	0.125	mg/L	U	0.25		Kaukauna	2018
Premium Solvent	Carbon tetrachloride	180-77383-1	0.25	0.125	mg/L	U	0.25		Kaukauna	2018

Premium Solvent	Carbon tetrachloride	180-77070-1	0.25	0.125	mg/L	U	0.25	Lackawanna	2018
Premium Solvent	Carbon tetrachloride	180-80012-1	0.25	0.125	mg/L	U	0.25	Oklahoma City	2018
Premium Solvent	Carbon tetrachloride	180-80014-1	0.25	0.125	mg/L	U	0.25	Oklahoma City	2018
Premium Solvent	Carbon tetrachloride	180-80848-1	0.25	0.125	mg/L	U	0.25	Sacramento	2018
Premium Solvent	Carbon tetrachloride	180-81823-1	0.25	0.125	mg/L	U	0.25	Salisbury	2018
Premium Solvent	Carbon tetrachloride	180-76988-1	0.25	0.125	mg/L	U	0.25	Salt Lake City	2018
Premium Solvent	Carbon tetrachloride	180-78677-1	0.25	0.125	mg/L	U	0.25	Santa Ana	2018
Premium Solvent	Carbon tetrachloride	180-78463-1	0.25	0.125	mg/L	U	0.25	St Pauls	2018
Premium Solvent	Carbon tetrachloride	180-76683-1	0.25	0.125	mg/L	U	0.25	Syracuse	2018
Premium Solvent	Carbon tetrachloride	180-79370-1	0.25	0.125	mg/L	U	0.25	Tampa	2018
Premium Solvent	Carbon tetrachloride	180-78689-1	0.25	0.125	mg/L	U	0.25	Vinton	2018
Premium Solvent	Carbon tetrachloride	180-76265-1	0.25	0.125	mg/L	U	0.25	Waukesha	2018
Premium Solvent	Carbon tetrachloride	180-76266-1	0.25	0.125	mg/L	U	0.25	Waukesha	2018
Premium Solvent	Carbon tetrachloride	180-76267-1	0.25	0.125	mg/L	U	0.25	Waukesha	2018
Premium Solvent	Carbon tetrachloride	180-76262-1	0.25	0.125	mg/L	U	0.25	Wichita	2018
Premium Solvent	Carbon tetrachloride	180-72259-2	0.25	0.125	mg/L	U	0.25	Chester	2018
Premium Solvent	Carbon tetrachloride	180-72871-1	0.25	0.125	mg/L	U	0.25	Sacramento	2018
Premium Solvent	Carbon tetrachloride	180-71540-1	0.25	0.125	mg/L	U	0.25	Salisbury	2018
Premium Solvent	Carbon tetrachloride	180-71594-1	0.25	0.125	mg/L	U	0.25	Santa Ana	2018
Premium Solvent	Carbon tetrachloride	180-74277-1	0.25	0.125	mg/L	U	0.25	Tallahassee	2018
Premium Solvent	Carbon Tetrachloride	180-53962-1	0.5	0.25	mg/L	U	0.5	Kaukauna	2016
Premium Solvent	Carbon Tetrachloride	180-56003-1	0.5	0.25	mg/L	U	0.5	St. Pauls	2016
Premium Solvent	Carbon Tetrachloride	180-55533-1	0.5	0.25	mg/L	U	0.5	Syracuse	2016
Premium Solvent	Chlorobenzene	180-58611-1	0.23	0.115	mg/L	U	0.23	Sacremento	2016
Premium Solvent	Chlorobenzene	180-58744-1	0.25	0.125	mg/L	U	0.25	Albuquerque	2016
Premium Solvent	Chlorobenzene	180-52527-1	0.25	0.125	mg/L	U	0.25	Boise	2016
Premium Solvent	Chlorobenzene	180-53494-1	0.25	0.125	mg/L	U	0.25	Chandler	2016
Premium Solvent	Chlorobenzene	180-58394-1	0.25	0.125	mg/L	U	0.25	Charlotte	2016
Premium Solvent	Chlorobenzene	180-54771-1	0.25	0.125	mg/L	U	0.25	Chester	2016
Premium Solvent	Chlorobenzene	180-58680-1	0.25	0.125	mg/L	U	0.25	Clackamas	2016
Premium Solvent	Chlorobenzene	180-56685-1	0.25	0.125	mg/L	U	0.25	Farmington	2016
Premium Solvent	Chlorobenzene	180-53961-1	0.25	0.125	mg/L	U	0.25	Kaukauna	2016
Premium Solvent	Chlorobenzene	180-53963-1	0.25	0.125	mg/L	U	0.25	Kaukauna	2016
Premium Solvent	Chlorobenzene	180-57964-1	0.25	0.125	mg/L	U	0.25	Omaha	2016

Premium Solvent	Chlorobenzene	180-58138-1	0.25	0.125	mg/L	U	0.25	Tampa	2016
Premium Solvent	Chlorobenzene	180-58732-1	0.25	0.125	mg/L	U	0.25	Tulsa	2016
Premium Solvent	Chlorobenzene	180-58266-1	0.25	0.125	mg/L	U	0.25	Vinton	2016
Premium Solvent	Chlorobenzene	180-54672-1	0.25	0.125	mg/L	U	0.25	Waukesha	2016
Premium Solvent	Chlorobenzene	180-54673-1	0.25	0.125	mg/L	U	0.25	Waukesha	2016
Premium Solvent	Chlorobenzene	180-54674-1	0.25	0.125	mg/L	U	0.25	Waukesha	2016
Premium Solvent	Chlorobenzene	180-54675-1	0.25	0.125	mg/L	U	0.25	Waukesha	2016
Premium Solvent	Chlorobenzene	180-54676-1	0.25	0.125	mg/L	U	0.25	Waukesha	2016
Premium Solvent	Chlorobenzene	180-54677-1	0.25	0.125	mg/L	U	0.25	Waukesha	2016
Premium Solvent	Chlorobenzene	180-54678-1	0.25	0.125	mg/L	U	0.25	Waukesha	2016
Premium Solvent	Chlorobenzene	180-54679-1	0.25	0.125	mg/L	U	0.25	Waukesha	2016
Premium Solvent	Chlorobenzene	180-54680-1	0.25	0.125	mg/L	U	0.25	Waukesha	2016
Premium Solvent	Chlorobenzene	180-66650-1	0.25	0.125	mg/L	U	0.25	Albuquerque	2017
Premium Solvent	Chlorobenzene	180-65687-1	0.25	0.125	mg/L	U	0.25	Archdale	2017
Premium Solvent	Chlorobenzene	180-65693-1	0.25	0.125	mg/L	U	0.25	Avon	2017
Premium Solvent	Chlorobenzene	180-64613-1	0.25	0.125	mg/L	U	0.25	Chandler	2017
Premium Solvent	Chlorobenzene	180-70321-1	0.25	0.125	mg/L	U	0.25	Chesapeake	2017
Premium Solvent	Chlorobenzene	180-69209-1	0.25	0.125	mg/L	U	0.25	Clackamas	2017
Premium Solvent	Chlorobenzene	180-65928-1	0.25	0.125	mg/L	U	0.25	Cohoes	2017
Premium Solvent	Chlorobenzene	180-68416-1	0.25	0.125	mg/L	U	0.25	Farmington	2017
Premium Solvent	Chlorobenzene	180-70383-1	0.25	0.125	mg/L	U	0.25	Grand Island	2017
Premium Solvent	Chlorobenzene	180-64751-1	0.25	0.125	mg/L	U	0.25	Kaukauna	2017
Premium Solvent	Chlorobenzene	180-64752-1	0.25	0.125	mg/L	U	0.25	Kaukauna	2017
Premium Solvent	Chlorobenzene	180-64753-1	0.25	0.125	mg/L	U	0.25	Kaukauna	2017
Premium Solvent	Chlorobenzene	180-65696-1	0.25	0.125	mg/L	U	0.25	Lackawanna	2017
Premium Solvent	Chlorobenzene	180-69242-1	0.25	0.125	mg/L	U	0.25	Oklahoma City	2017
Premium Solvent	Chlorobenzene	180-69237-1	0.25	0.125	mg/L	U	0.25	Omaha	2017
Premium Solvent	Chlorobenzene	180-70392-1	0.25	0.125	mg/L	U	0.25	Raleigh	2017
Premium Solvent	Chlorobenzene	180-68772-1	0.25	0.125	mg/L	U	0.25	St Pauls	2017
Premium Solvent	Chlorobenzene	180-65396-1	0.25	0.125	mg/L	U	0.25	Syracuse	2017
Premium Solvent	Chlorobenzene	180-66253-1	0.25	0.125	mg/L	U	0.25	Vinton	2017
Premium Solvent	Chlorobenzene	180-68919-1	0.25	0.125	mg/L	U	0.25	Waukesha	2017
Premium Solvent	Chlorobenzene	180-68924-1	0.25	0.125	mg/L	U	0.25	Waukesha	2017
Premium Solvent	Chlorobenzene	180-68925-1	0.25	0.125	mg/L	U	0.25	Waukesha	2017

Premium Solvent	Chlorobenzene	180-64796-1	0.25	0.125	mg/L	U	0.25		Wichita	2017
Premium Solvent	Chlorobenzene	180-60141-1	0.25	0.125	mg/L	U	0.25		Avon	2017
Premium Solvent	Chlorobenzene	180-60012-1	0.25	0.125	mg/L	U	0.25		Chesapeake	2017
Premium Solvent	Chlorobenzene	180-59840-1	0.25	0.125	mg/L	U	0.25		Cohoes	2017
Premium Solvent	Chlorobenzene	180-59969-1	0.25	0.125	mg/L	U	0.25		Lackawanna	2017
Premium Solvent	Chlorobenzene	180-60895-1	0.25	0.125	mg/L	U	0.25		Archdale	2017
Premium Solvent	Chlorobenzene	180-60618-1	0.25	0.125	mg/L	U	0.25	52	Barre	2017
Premium Solvent	Chlorobenzene	180-81014-1	0.25	0.125	mg/L	U H	0.25		Albuquerque	2018
Premium Solvent	Chlorobenzene	180-77400-1	0.25	0.125	mg/L	U	0.25		Archdale	2018
Premium Solvent	Chlorobenzene	180-80742-1	0.25	0.125	mg/L	U	0.25		Avon	2018
Premium Solvent	Chlorobenzene	180-81163-1	0.25	0.125	mg/L	U	0.25		Barre	2018
Premium Solvent	Chlorobenzene	180-77125-1	0.25	0.125	mg/L	U	0.25		Boise	2018
Premium Solvent	Chlorobenzene	180-77004-1	0.25	0.125	mg/L	U	0.25		Chandler	2018
Premium Solvent	Chlorobenzene	180-77391-1	0.25	0.125	mg/L	U	0.25		Chester	2018
Premium Solvent	Chlorobenzene	180-82330-1	0.25	0.125	mg/L	U	0.25		Clackamas	2018
Premium Solvent	Chlorobenzene	180-77710-1	0.25	0.125	mg/L	U	0.25		Cohoes	2018
Premium Solvent	Chlorobenzene	180-81146-1	0.25	0.125	mg/L	U	0.25		Farmington	2018
Premium Solvent	Chlorobenzene	180-77381-1	0.25	0.125	mg/L	U	0.25		Kaukauna	2018
Premium Solvent	Chlorobenzene	180-77382-1	0.25	0.125	mg/L	U	0.25		Kaukauna	2018
Premium Solvent	Chlorobenzene	180-77383-1	0.25	0.125	mg/L	U	0.25		Kaukauna	2018
Premium Solvent	Chlorobenzene	180-77070-1	0.25	0.125	mg/L	U	0.25		Lackawanna	2018
Premium Solvent	Chlorobenzene	180-80012-1	0.25	0.125	mg/L	U	0.25		Oklahoma City	2018
Premium Solvent	Chlorobenzene	180-80014-1	0.25	0.125	mg/L	U	0.25		Oklahoma City	2018
Premium Solvent	Chlorobenzene	180-80848-1	0.25	0.125	mg/L	U	0.25		Sacramento	2018
Premium Solvent	Chlorobenzene	180-81823-1	0.25	0.125	mg/L	U	0.25		Salisbury	2018
Premium Solvent	Chlorobenzene	180-76988-1	0.25	0.125	mg/L	U	0.25		Salt Lake City	2018
Premium Solvent	Chlorobenzene	180-78677-1	0.25	0.125	mg/L	U	0.25		Santa Ana	2018
Premium Solvent	Chlorobenzene	180-78463-1	0.25	0.125	mg/L	U	0.25		St Pauls	2018
Premium Solvent	Chlorobenzene	180-76683-1	0.25	0.125	mg/L	U	0.25		Syracuse	2018
Premium Solvent	Chlorobenzene	180-79370-1	0.25	0.125	mg/L	U	0.25		Tampa	2018
Premium Solvent	Chlorobenzene	180-78689-1	0.25	0.125	mg/L	U	0.25		Vinton	2018
Premium Solvent	Chlorobenzene	180-76265-1	0.25	0.125	mg/L	U	0.25		Waukesha	2018
Premium Solvent	Chlorobenzene	180-76266-1	0.25	0.125	mg/L	U	0.25		Waukesha	2018
Premium Solvent	Chlorobenzene	180-76267-1	0.25	0.125	mg/L	U	0.25		Waukesha	2018

Premium Solvent	Chlorobenzene	180-76262-1	0.25	0.125	mg/L	U	0.25	Wichita	2018
Premium Solvent	Chlorobenzene	180-72259-2	0.25	0.125	mg/L	U	0.25	Chester	2018
Premium Solvent	Chlorobenzene	180-72871-1	0.25	0.125	mg/L	U	0.25	Sacramento	2018
Premium Solvent	Chlorobenzene	180-71540-1	0.25	0.125	mg/L	U	0.25	Salisbury	2018
Premium Solvent	Chlorobenzene	180-71594-1	0.25	0.125	mg/L	U	0.25	Santa Ana	2018
Premium Solvent	Chlorobenzene	180-74277-1	0.25	0.125	mg/L	U	0.25	Tallahassee	2018
Premium Solvent	Chlorobenzene	180-53962-1	0.5	0.25	mg/L	U	0.5	Kaukauna	2016
Premium Solvent	Chlorobenzene	180-56003-1	0.5	0.25	mg/L	U	0.5	St. Pauls	2016
Premium Solvent	Chlorobenzene	180-55533-1	0.5	0.25	mg/L	U	0.5	Syracuse	2016
Premium Solvent	Chloroform	180-58611-1	0.63	0.315	mg/L	U	0.63	Sacremento	2016
Premium Solvent	Chloroform	180-58744-1	1	0.5	mg/L	U	1	Albuquerque	2016
Premium Solvent	Chloroform	180-52527-1	1	0.5	mg/L	U	1	Boise	2016
Premium Solvent	Chloroform	180-53494-1	1	0.5	mg/L	U	1	Chandler	2016
Premium Solvent	Chloroform	180-58394-1	1	0.5	mg/L	U	1	Charlotte	2016
Premium Solvent	Chloroform	180-54771-1	1	0.5	mg/L	U	1	Chester	2016
Premium Solvent	Chloroform	180-58680-1	1	0.5	mg/L	U	1	Clackamas	2016
Premium Solvent	Chloroform	180-56685-1	1	0.5	mg/L	U	1	Farmington	2016
Premium Solvent	Chloroform	180-53961-1	1	0.5	mg/L	U	1	Kaukauna	2016
Premium Solvent	Chloroform	180-53963-1	1	0.5	mg/L	U	1	Kaukauna	2016
Premium Solvent	Chloroform	180-57964-1	1	0.5	mg/L	U	1	Omaha	2016
Premium Solvent	Chloroform	180-58138-1	1	0.5	mg/L	U	1	Tampa	2016
Premium Solvent	Chloroform	180-58732-1	1	0.5	mg/L	U	1	Tulsa	2016
Premium Solvent	Chloroform	180-58266-1	1	0.5	mg/L	U	1	Vinton	2016
Premium Solvent	Chloroform	180-54672-1	1	0.5	mg/L	U	1	Waukesha	2016
Premium Solvent	Chloroform	180-54673-1	1	0.5	mg/L	U	1	Waukesha	2016
Premium Solvent	Chloroform	180-54674-1	1	0.5	mg/L	U	1	Waukesha	2016
Premium Solvent	Chloroform	180-54675-1	1	0.5	mg/L	U	1	Waukesha	2016
Premium Solvent	Chloroform	180-54676-1	1	0.5	mg/L	U	1	Waukesha	2016
Premium Solvent	Chloroform	180-54677-1	1	0.5	mg/L	U	1	Waukesha	2016
Premium Solvent	Chloroform	180-54678-1	1	0.5	mg/L	U	1	Waukesha	2016
Premium Solvent	Chloroform	180-54679-1	1	0.5	mg/L	U	1	Waukesha	2016
Premium Solvent	Chloroform	180-54680-1	1	0.5	mg/L	U	1	Waukesha	2016
Premium Solvent	Chloroform	180-66650-1	1	0.5	mg/L	U	1	Albuquerque	2017
Premium Solvent	Chloroform	180-65687-1	1	0.5	mg/L	U	1	Archdale	2017

Premium Solvent	Chloroform	180-65693-1	1	0.5	mg/L	U	1		Avon	2017
Premium Solvent	Chloroform	180-64613-1	1	0.5	mg/L	U	1		Chandler	2017
Premium Solvent	Chloroform	180-70321-1	1	0.5	mg/L	U	1		Chesapeake	2017
Premium Solvent	Chloroform	180-69209-1	1	0.5	mg/L	U	1		Clackamas	2017
Premium Solvent	Chloroform	180-65928-1	1	0.5	mg/L	U	1		Cohoes	2017
Premium Solvent	Chloroform	180-68416-1	1	0.5	mg/L	U	1		Farmington	2017
Premium Solvent	Chloroform	180-70383-1	1	0.5	mg/L	U	1		Grand Island	2017
Premium Solvent	Chloroform	180-64751-1	1	0.5	mg/L	U	1		Kaukauna	2017
Premium Solvent	Chloroform	180-64752-1	1	0.5	mg/L	U	1		Kaukauna	2017
Premium Solvent	Chloroform	180-64753-1	1	0.5	mg/L	U	1		Kaukauna	2017
Premium Solvent	Chloroform	180-65696-1	1	0.5	mg/L	U	1		Lackawanna	2017
Premium Solvent	Chloroform	180-69242-1	1	0.5	mg/L	U	1		Oklahoma City	2017
Premium Solvent	Chloroform	180-69237-1	1	0.5	mg/L	U	1		Omaha	2017
Premium Solvent	Chloroform	180-70392-1	1	0.5	mg/L	U	1		Raleigh	2017
Premium Solvent	Chloroform	180-68772-1	1	0.5	mg/L	U	1		St Pauls	2017
Premium Solvent	Chloroform	180-65396-1	1	0.5	mg/L	U	1		Syracuse	2017
Premium Solvent	Chloroform	180-66253-1	1	0.5	mg/L	U	1		Vinton	2017
Premium Solvent	Chloroform	180-68919-1	1	0.5	mg/L	U	1		Waukesha	2017
Premium Solvent	Chloroform	180-68924-1	1	0.5	mg/L	U	1		Waukesha	2017
Premium Solvent	Chloroform	180-68925-1	1	0.5	mg/L	U	1		Waukesha	2017
Premium Solvent	Chloroform	180-64796-1	1	0.5	mg/L	U	1		Wichita	2017
Premium Solvent	Chloroform	180-60141-1	1	0.5	mg/L	U	1		Avon	2017
Premium Solvent	Chloroform	180-60012-1	1	0.5	mg/L	U	1		Chesapeake	2017
Premium Solvent	Chloroform	180-59840-1	1	0.5	mg/L	U	1		Cohoes	2017
Premium Solvent	Chloroform	180-59969-1	1	0.5	mg/L	U	1		Lackawanna	2017
Premium Solvent	Chloroform	180-60895-1	1	0.5	mg/L	U	1		Archdale	2017
Premium Solvent	Chloroform	180-60618-1	1	0.5	mg/L	U	1	52	Barre	2017
Premium Solvent	Chloroform	180-81014-1	1	0.5	mg/L	U H	1		Albuquerque	2018
Premium Solvent	Chloroform	180-77400-1	1	0.5	mg/L	U	1		Archdale	2018
Premium Solvent	Chloroform	180-80742-1	1	0.5	mg/L	U	1		Avon	2018
Premium Solvent	Chloroform	180-81163-1	1	0.5	mg/L	U	1		Barre	2018
Premium Solvent	Chloroform	180-77125-1	1	0.5	mg/L	U	1		Boise	2018
Premium Solvent	Chloroform	180-77004-1	1	0.5	mg/L	U	1		Chandler	2018
Premium Solvent	Chloroform	180-77391-1	1	0.5	mg/L	U	1		Chester	2018

Premium Solvent	Chloroform	180-82330-1	1	0.5	mg/L	U	1	Clackamas	2018
Premium Solvent	Chloroform	180-77710-1	1	0.5	mg/L	U	1	Cohoes	2018
Premium Solvent	Chloroform	180-81146-1	1	0.5	mg/L	U	1	Farmington	2018
Premium Solvent	Chloroform	180-77381-1	1	0.5	mg/L	U	1	Kaukauna	2018
Premium Solvent	Chloroform	180-77382-1	1	0.5	mg/L	U	1	Kaukauna	2018
Premium Solvent	Chloroform	180-77383-1	1	0.5	mg/L	U	1	Kaukauna	2018
Premium Solvent	Chloroform	180-77070-1	1	0.5	mg/L	U	1	Lackawanna	2018
Premium Solvent	Chloroform	180-80012-1	1	0.5	mg/L	U	1	Oklahoma City	2018
Premium Solvent	Chloroform	180-80014-1	1	0.5	mg/L	U	1	Oklahoma City	2018
Premium Solvent	Chloroform	180-80848-1	1	0.5	mg/L	U	1	Sacramento	2018
Premium Solvent	Chloroform	180-81823-1	1	0.5	mg/L	U	1	Salisbury	2018
Premium Solvent	Chloroform	180-76988-1	1	0.5	mg/L	U	1	Salt Lake City	2018
Premium Solvent	Chloroform	180-78677-1	1	0.5	mg/L	U	1	Santa Ana	2018
Premium Solvent	Chloroform	180-78463-1	1	0.5	mg/L	U	1	St Pauls	2018
Premium Solvent	Chloroform	180-76683-1	1	0.5	mg/L	U	1	Syracuse	2018
Premium Solvent	Chloroform	180-79370-1	1	0.5	mg/L	U	1	Tampa	2018
Premium Solvent	Chloroform	180-78689-1	1	0.5	mg/L	U	1	Vinton	2018
Premium Solvent	Chloroform	180-76265-1	1	0.5	mg/L	U	1	Waukesha	2018
Premium Solvent	Chloroform	180-76266-1	1	0.5	mg/L	U	1	Waukesha	2018
Premium Solvent	Chloroform	180-76267-1	1	0.5	mg/L	U	1	Waukesha	2018
Premium Solvent	Chloroform	180-76262-1	1	0.5	mg/L	U	1	Wichita	2018
Premium Solvent	Chloroform	180-72259-2	1	0.5	mg/L	U	1	Chester	2018
Premium Solvent	Chloroform	180-72871-1	1	0.5	mg/L	U	1	Sacramento	2018
Premium Solvent	Chloroform	180-71540-1	1	0.5	mg/L	U	1	Salisbury	2018
Premium Solvent	Chloroform	180-71594-1	1	0.5	mg/L	U	1	Santa Ana	2018
Premium Solvent	Chloroform	180-74277-1	1	0.5	mg/L	U	1	Tallahassee	2018
Premium Solvent	Chloroform	180-53962-1	2	1	mg/L	U	2	Kaukauna	2016
Premium Solvent	Chloroform	180-56003-1	2	1	mg/L	U	2	St. Pauls	2016
Premium Solvent	Chloroform	180-55533-1	2	1	mg/L	U	2	Syracuse	2016
Premium Solvent	Chromium	180-60141-1	0.061	0.061	mg/L	J	0.5	Avon	2017
Premium Solvent	Chromium	180-58611-1	0.066	0.066	mg/L	J	0.29	Sacremento	2016
Premium Solvent	Chromium	180-65693-1	0.066	0.066	mg/L	J	0.5	Avon	2017
Premium Solvent	Chromium	180-60895-1	0.066	0.066	mg/L	J	0.5	Archdale	2017
Premium Solvent	Chromium	180-64753-1	0.068	0.068	mg/L	J	0.5	Kaukauna	2017

Premium Solvent	Chromium	180-58394-1	0.071	0.071	mg/L	J B	0.5	Charlotte	2016
Premium Solvent	Chromium	180-65396-1	0.076	0.076	mg/L	J B	0.5	Syracuse	2017
Premium Solvent	Chromium	180-68919-1	0.08	0.08	mg/L	J	0.5	Waukesha	2017
Premium Solvent	Chromium	180-59969-1	0.08	0.08	mg/L	J B	0.5	Lackawanna	2017
Premium Solvent	Chromium	180-56685-1	0.081	0.081	mg/L	J B	0.5	Farmington	2016
Premium Solvent	Chromium	180-76265-1	0.081	0.081	mg/L	J	0.5	Waukesha	2018
Premium Solvent	Chromium	180-69209-1	0.085	0.085	mg/L	J	0.5	Clackamas	2017
Premium Solvent	Chromium	180-77383-1	0.086	0.086	mg/L	J	0.5	Kaukauna	2018
Premium Solvent	Chromium	180-58266-1	0.087	0.087	mg/L	J B	0.5	Vinton	2016
Premium Solvent	Chromium	180-72871-1	0.087	0.087	mg/L	J	0.5	Sacramento	2018
Premium Solvent	Chromium	180-71594-1	0.087	0.087	mg/L	J	0.5	Santa Ana	2018
Premium Solvent	Chromium	180-81014-1	0.088	0.088	mg/L	J B	0.5	Albuquerque	2018
Premium Solvent	Chromium	180-60012-1	0.091	0.091	mg/L	J B	0.5	Chesapeake	2017
Premium Solvent	Chromium	180-54771-1	0.094	0.094	mg/L	J	0.5	Chester	2016
Premium Solvent	Chromium	180-80742-1	0.096	0.096	mg/L	J	0.5	Avon	2018
Premium Solvent	Chromium	180-76262-1	0.096	0.096	mg/L	J	0.5	Wichita	2018
Premium Solvent	Chromium	180-71540-1	0.099	0.099	mg/L	J	0.5	Salisbury	2018
Premium Solvent	Chromium	180-77391-1	0.11	0.11	mg/L	J	0.5	Chester	2018
Premium Solvent	Chromium	180-77070-1	0.11	0.11	mg/L	J	0.5	Lackawanna	2018
Premium Solvent	Chromium	180-78463-1	0.11	0.11	mg/L	J	0.5	St Pauls	2018
Premium Solvent	Chromium	180-76683-1	0.11	0.11	mg/L	J	0.5	Syracuse	2018
Premium Solvent	Chromium	180-76267-1	0.11	0.11	mg/L	J	0.5	Waukesha	2018
Premium Solvent	Chromium	180-58744-1	0.12	0.12	mg/L	J	0.5	Albuquerque	2016
Premium Solvent	Chromium	180-77400-1	0.12	0.12	mg/L	J	0.5	Archdale	2018
Premium Solvent	Chromium	180-76266-1	0.12	0.12	mg/L	J	0.5	Waukesha	2018
Premium Solvent	Chromium	180-70383-1	0.13	0.13	mg/L	J	0.5	Grand Island	2017
Premium Solvent	Chromium	180-77125-1	0.13	0.13	mg/L	J	0.5	Boise	2018
Premium Solvent	Chromium	180-82330-1	0.13	0.13	mg/L	J	0.5	Clackamas	2018
Premium Solvent	Chromium	180-81823-1	0.14	0.14	mg/L	J B	0.5	Salisbury	2018
Premium Solvent	Chromium	180-58680-1	0.15	0.15	mg/L	J B	0.5	Clackamas	2016
Premium Solvent	Chromium	180-70321-1	0.15	0.15	mg/L	J	0.5	Chesapeake	2017
Premium Solvent	Chromium	180-81163-1	0.15	0.15	mg/L	J B	0.5	Barre	2018
Premium Solvent	Chromium	180-80012-1	0.15	0.15	mg/L	J	0.5	Oklahoma City	2018
Premium Solvent	Chromium	180-53961-1	0.16	0.16	mg/L	J	0.5	Kaukauna	2016

Premium Solvent	Chromium	180-59840-1	0.16	0.16	mg/L	J	0.5		Cohoes	2017
Premium Solvent	Chromium	180-78689-1	0.16	0.16	mg/L	J	0.5		Vinton	2018
Premium Solvent	Chromium	180-64751-1	0.17	0.17	mg/L	J	0.5		Kaukauna	2017
Premium Solvent	Chromium	180-53494-1	0.18	0.18	mg/L	J	0.5		Chandler	2016
Premium Solvent	Chromium	180-55533-1	0.2	0.2	mg/L	J	0.5		Syracuse	2016
Premium Solvent	Chromium	180-77004-1	0.21	0.21	mg/L	J	0.5		Chandler	2018
Premium Solvent	Chromium	180-66253-1	0.22	0.22	mg/L	J B	0.5		Vinton	2017
Premium Solvent	Chromium	180-53963-1	0.23	0.23	mg/L	J	0.5		Kaukauna	2016
Premium Solvent	Chromium	180-69237-1	0.23	0.23	mg/L	J	0.5		Omaha	2017
Premium Solvent	Chromium	180-52527-1	0.5	0.25	mg/L	U	0.5		Boise	2016
Premium Solvent	Chromium	180-56003-1	0.5	0.25	mg/L	U	0.5		St. Pauls	2016
Premium Solvent	Chromium	180-58138-1	0.5	0.25	mg/L	U	0.5		Tampa	2016
Premium Solvent	Chromium	180-58732-1	0.5	0.25	mg/L	U	0.5	52	Tulsa	2016
Premium Solvent	Chromium	180-54672-1	0.5	0.25	mg/L	U	0.5		Waukesha	2016
Premium Solvent	Chromium	180-54674-1	0.5	0.25	mg/L	U	0.5		Waukesha	2016
Premium Solvent	Chromium	180-54675-1	0.5	0.25	mg/L	U	0.5		Waukesha	2016
Premium Solvent	Chromium	180-54676-1	0.5	0.25	mg/L	U	0.5		Waukesha	2016
Premium Solvent	Chromium	180-54677-1	0.5	0.25	mg/L	U	0.5		Waukesha	2016
Premium Solvent	Chromium	180-54678-1	0.5	0.25	mg/L	U	0.5		Waukesha	2016
Premium Solvent	Chromium	180-54679-1	0.5	0.25	mg/L	U	0.5		Waukesha	2016
Premium Solvent	Chromium	180-66650-1	0.5	0.25	mg/L	U	0.5		Albuquerque	2017
Premium Solvent	Chromium	180-65687-1	0.5	0.25	mg/L	U	0.5		Archdale	2017
Premium Solvent	Chromium	180-64613-1	0.5	0.25	mg/L	U	0.5		Chandler	2017
Premium Solvent	Chromium	180-68416-1	0.5	0.25	mg/L	U	0.5		Farmington	2017
Premium Solvent	Chromium	180-69242-1	0.5	0.25	mg/L	U	0.5		Oklahoma City	2017
Premium Solvent	Chromium	180-70392-1	0.5	0.25	mg/L	U	0.5		Raleigh	2017
Premium Solvent	Chromium	180-68772-1	0.5	0.25	mg/L	U	0.5		St Pauls	2017
Premium Solvent	Chromium	180-68924-1	0.5	0.25	mg/L	U	0.5		Waukesha	2017
Premium Solvent	Chromium	180-64796-1	0.5	0.25	mg/L	U	0.5		Wichita	2017
Premium Solvent	Chromium	180-77710-1	0.5	0.25	mg/L	U	0.5		Cohoes	2018
Premium Solvent	Chromium	180-77381-1	0.5	0.25	mg/L	U	0.5		Kaukauna	2018
Premium Solvent	Chromium	180-77382-1	0.5	0.25	mg/L	U	0.5		Kaukauna	2018
Premium Solvent	Chromium	180-80014-1	0.5	0.25	mg/L	U	0.5		Oklahoma City	2018
Premium Solvent	Chromium	180-80848-1	0.5	0.25	mg/L	U	0.5		Sacramento	2018

Premium Solvent	Chromium	180-78677-1	0.5	0.25	mg/L	U	0.5	Santa Ana	2018
Premium Solvent	Chromium	180-79370-1	0.5	0.25	mg/L	U	0.5	Tampa	2018
Premium Solvent	Chromium	180-74277-1	0.5	0.25	mg/L	U	0.5	Tallahassee	2018
Premium Solvent	Chromium	180-81146-1	0.26	0.26	mg/L	J B	0.5	Farmington	2018
Premium Solvent	Chromium	180-64752-1	0.29	0.29	mg/L	J	0.5	Kaukauna	2017
Premium Solvent	Chromium	180-60618-1	0.35	0.35	mg/L	J	0.5	Barre	2017
Premium Solvent	Chromium	180-76988-1	0.37	0.37	mg/L	J	0.5	Salt Lake City	2018
Premium Solvent	Chromium	180-72259-2	0.41	0.41	mg/L	J	0.5	Chester	2018
Premium Solvent	Chromium	180-53962-1	0.46	0.46	mg/L	J	0.5	Kaukauna	2016
Premium Solvent	Chromium	180-65928-1	0.47	0.47	mg/L	J	0.5	Cohoes	2017
Premium Solvent	Chromium	180-57964-1	0.51	0.51	mg/L		0.5	Omaha	2016
Premium Solvent	Chromium	180-68925-1	0.52	0.52	mg/L		0.5	Waukesha	2017
Premium Solvent	Chromium	180-54680-1	0.65	0.65	mg/L		0.5	Waukesha	2016
Premium Solvent	Chromium	180-54673-1	0.77	0.77	mg/L		0.5	Waukesha	2016
Premium Solvent	Chromium	180-65696-1	12	12	mg/L		0.5	Lackawanna	2017
Premium Solvent	Flashpoint	180-58732-1	>200	>200	Degrees F		1	Tulsa	2016
Premium Solvent	Flashpoint	180-80012-1	>200	>200	Degrees F		1	Oklahoma City	2018
Premium Solvent	Flashpoint	180-80014-1	>200	>200	Degrees F		1	Oklahoma City	2018
Premium Solvent	Flashpoint	180-74277-1	168	168	Degrees F		1	Tallahassee	2018
Premium Solvent	Flashpoint	180-58394-1	166	166	Degrees F		1	Charlotte	2016
Premium Solvent	Flashpoint	180-58266-1	166	166	Degrees F		1	Vinton	2016
Premium Solvent	Flashpoint	180-78463-1	166	166	Degrees F		1	St Pauls	2018
Premium Solvent	Flashpoint	180-79370-1	166	166	Degrees F		1	Tampa	2018
Premium Solvent	Flashpoint	180-68416-1	165	165	Degrees F		1	Farmington	2017
Premium Solvent	Flashpoint	180-64751-1	165	165	Degrees F		1	Kaukauna	2017
Premium Solvent	Flashpoint	180-68772-1	165	165	Degrees F		1	St Pauls	2017
Premium Solvent	Flashpoint	180-64796-1	165	165	Degrees F		1	Wichita	2017
Premium Solvent	Flashpoint	180-58611-1	164	164	Degrees F		1	Sacremento	2016
Premium Solvent	Flashpoint	180-66253-1	164	164	Degrees F		1	Vinton	2017
Premium Solvent	Flashpoint	180-65687-1	163	163	Degrees F		1	Archdale	2017
Premium Solvent	Flashpoint	180-77400-1	163	163	Degrees F		1	Archdale	2018
Premium Solvent	Flashpoint	180-64613-1	162	162	Degrees F		1	Chandler	2017
Premium Solvent	Flashpoint	180-77710-1	162	162	Degrees F		1	Cohoes	2018
Premium Solvent	Flashpoint	180-65693-1	161	161	Degrees F		1	Avon	2017

Premium Solvent	Flashpoint	180-64752-1	161	161	Degrees F	1		Kaukauna	2017
Premium Solvent	Flashpoint	180-81823-1	161	161	Degrees F	1		Salisbury	2018
Premium Solvent	Flashpoint	180-57964-1	160	160	Degrees F	1		Omaha	2016
Premium Solvent	Flashpoint	180-70392-1	160	160	Degrees F	1		Raleigh	2017
Premium Solvent	Flashpoint	180-60012-1	160	160	Degrees F	1		Chesapeake	2017
Premium Solvent	Flashpoint	180-60895-1	160	160	Degrees F	1		Archdale	2017
Premium Solvent	Flashpoint	180-76265-1	160	160	Degrees F	1		Waukesha	2018
Premium Solvent	Flashpoint	180-69209-1	159	159	Degrees F	1		Clackamas	2017
Premium Solvent	Flashpoint	180-65928-1	159	159	Degrees F	1		Cohoes	2017
Premium Solvent	Flashpoint	180-65396-1	159	159	Degrees F	1		Syracuse	2017
Premium Solvent	Flashpoint	180-68925-1	159	159	Degrees F	1		Waukesha	2017
Premium Solvent	Flashpoint	180-59969-1	159	159	Degrees F	1		Lackawanna	2017
Premium Solvent	Flashpoint	180-69242-1	158	158	Degrees F	1		Oklahoma City	2017
Premium Solvent	Flashpoint	180-78677-1	158	158	Degrees F	1		Santa Ana	2018
Premium Solvent	Flashpoint	180-71594-1	158	158	Degrees F	1		Santa Ana	2018
Premium Solvent	Flashpoint	180-58680-1	157	157	Degrees F	1	52	Clackamas	2016
Premium Solvent	Flashpoint	180-66650-1	157	157	Degrees F	1		Albuquerque	2017
Premium Solvent	Flashpoint	180-76267-1	157	157	Degrees F	1		Waukesha	2018
Premium Solvent	Flashpoint	180-70321-1	156	156	Degrees F	1		Chesapeake	2017
Premium Solvent	Flashpoint	180-77004-1	156	156	Degrees F	1		Chandler	2018
Premium Solvent	Flashpoint	180-82330-1	156	156	Degrees F	1		Clackamas	2018
Premium Solvent	Flashpoint	180-77383-1	156	156	Degrees F	1		Kaukauna	2018
Premium Solvent	Flashpoint	180-76988-1	156	156	Degrees F	1		Salt Lake City	2018
Premium Solvent	Flashpoint	180-77381-1	155	155	Degrees F	1		Kaukauna	2018
Premium Solvent	Flashpoint	180-76683-1	155	155	Degrees F	1		Syracuse	2018
Premium Solvent	Flashpoint	180-70383-1	154	154	Degrees F	1		Grand Island	2017
Premium Solvent	Flashpoint	180-65696-1	154	154	Degrees F	1		Lackawanna	2017
Premium Solvent	Flashpoint	180-68924-1	154	154	Degrees F	1		Waukesha	2017
Premium Solvent	Flashpoint	180-59840-1	154	154	Degrees F	1		Cohoes	2017
Premium Solvent	Flashpoint	180-80742-1	154	154	Degrees F	1		Avon	2018
Premium Solvent	Flashpoint	180-80848-1	154	154	Degrees F	1		Sacramento	2018
Premium Solvent	Flashpoint	180-72259-2	154	154	Degrees F	1		Chester	2018
Premium Solvent	Flashpoint	180-72871-1	154	154	Degrees F	1		Sacramento	2018
Premium Solvent	Flashpoint	180-53961-1	153	153	Degrees F	1		Kaukauna	2016

Premium Solvent	Flashpoint	180-56003-1	153	153	Degrees F	1	St. Pauls	2016
Premium Solvent	Flashpoint	180-54678-1	153	153	Degrees F	1	Waukesha	2016
Premium Solvent	Flashpoint	180-64753-1	153	153	Degrees F	1	Kaukauna	2017
Premium Solvent	Flashpoint	180-60141-1	152	152	Degrees F	1	Avon	2017
Premium Solvent	Flashpoint	180-81014-1	152	152	Degrees F	1	Albuquerque	2018
Premium Solvent	Flashpoint	180-77391-1	152	152	Degrees F	1	Chester	2018
Premium Solvent	Flashpoint	180-76262-1	152	152	Degrees F	1	Wichita	2018
Premium Solvent	Flashpoint	180-71540-1	152	152	Degrees F	1	Salisbury	2018
Premium Solvent	Flashpoint	180-52527-1	151	151	Degrees F	1	Boise	2016
Premium Solvent	Flashpoint	180-56685-1	151	151	Degrees F	1	Farmington	2016
Premium Solvent	Flashpoint	180-53963-1	151	151	Degrees F	1	Kaukauna	2016
Premium Solvent	Flashpoint	180-55533-1	151	151	Degrees F	1	Syracuse	2016
Premium Solvent	Flashpoint	180-54672-1	151	151	Degrees F	1	Waukesha	2016
Premium Solvent	Flashpoint	180-54674-1	151	151	Degrees F	1	Waukesha	2016
Premium Solvent	Flashpoint	180-54677-1	151	151	Degrees F	1	Waukesha	2016
Premium Solvent	Flashpoint	180-54679-1	151	151	Degrees F	1	Waukesha	2016
Premium Solvent	Flashpoint	180-69237-1	151	151	Degrees F	1	Omaha	2017
Premium Solvent	Flashpoint	180-68919-1	151	151	Degrees F	1	Waukesha	2017
Premium Solvent	Flashpoint	180-77382-1	151	151	Degrees F	1	Kaukauna	2018
Premium Solvent	Flashpoint	180-53494-1	149	149	Degrees F	1	Chandler	2016
Premium Solvent	Flashpoint	180-54771-1	149	149	Degrees F	1	Chester	2016
Premium Solvent	Flashpoint	180-54675-1	149	149	Degrees F	1	Waukesha	2016
Premium Solvent	Flashpoint	180-54676-1	149	149	Degrees F	1	Waukesha	2016
Premium Solvent	Flashpoint	180-81146-1	149	149	Degrees F	1	Farmington	2018
Premium Solvent	Flashpoint	180-78689-1	149	149	Degrees F	1	Vinton	2018
Premium Solvent	Flashpoint	180-58138-1	146	146	Degrees F	1	Tampa	2016
Premium Solvent	Flashpoint	180-60618-1	141	141	Degrees F	1	Barre	2017
Premium Solvent	Flashpoint	180-58744-1	136	136	Degrees F	1	Albuquerque	2016
Premium Solvent	Flashpoint	180-54673-1	135	135	Degrees F	1	Waukesha	2016
Premium Solvent	Flashpoint	180-54680-1	135	135	Degrees F	1	Waukesha	2016
Premium Solvent	Flashpoint	180-81163-1	128	128	Degrees F	1	Barre	2018
Premium Solvent	Flashpoint	180-77125-1	123	123	Degrees F	1	Boise	2018
Premium Solvent	Flashpoint	180-76266-1	117	117	Degrees F	1	Waukesha	2018
Premium Solvent	Flashpoint	180-77070-1	114	114	Degrees F	1	Lackawanna	2018

Premium Solvent	Flashpoint	180-53962-1	83	83	Degrees F		1	Kaukauna	2016
Premium Solvent	Hexachlorobenzene	180-58611-1	0.09	0.045	mg/L	U	0.09	Sacremento	2016
Premium Solvent	Hexachlorobenzene	180-58744-1	0.13	0.065	mg/L	U	0.13	Albuquerque	2016
Premium Solvent	Hexachlorobenzene	180-52527-1	0.13	0.065	mg/L	U	0.13	Boise	2016
Premium Solvent	Hexachlorobenzene	180-53494-1	0.13	0.065	mg/L	U	0.13	Chandler	2016
Premium Solvent	Hexachlorobenzene	180-58394-1	0.13	0.065	mg/L	U	0.13	Charlotte	2016
Premium Solvent	Hexachlorobenzene	180-54771-1	0.13	0.065	mg/L	U	0.13	Chester	2016
Premium Solvent	Hexachlorobenzene	180-58680-1	0.13	0.065	mg/L	U	0.13	Clackamas	2016
Premium Solvent	Hexachlorobenzene	180-56685-1	0.13	0.065	mg/L	U	0.13	Farmington	2016
Premium Solvent	Hexachlorobenzene	180-53961-1	0.13	0.065	mg/L	U	0.13	Kaukauna	2016
Premium Solvent	Hexachlorobenzene	180-53962-1	0.13	0.065	mg/L	U	0.13	Kaukauna	2016
Premium Solvent	Hexachlorobenzene	180-53963-1	0.13	0.065	mg/L	U	0.13	Kaukauna	2016
Premium Solvent	Hexachlorobenzene	180-57964-1	0.13	0.065	mg/L	U	0.13	Omaha	2016
Premium Solvent	Hexachlorobenzene	180-56003-1	0.13	0.065	mg/L	U	0.13	St. Pauls	2016
Premium Solvent	Hexachlorobenzene	180-55533-1	0.13	0.065	mg/L	U	0.13	Syracuse	2016
Premium Solvent	Hexachlorobenzene	180-58138-1	0.13	0.065	mg/L	U	0.13	Tampa	2016
Premium Solvent	Hexachlorobenzene	180-58732-1	0.13	0.065	mg/L	U	0.13	Tulsa	2016
Premium Solvent	Hexachlorobenzene	180-58266-1	0.13	0.065	mg/L	U	0.13	Vinton	2016
Premium Solvent	Hexachlorobenzene	180-54672-1	0.13	0.065	mg/L	U	0.13	Waukesha	2016
Premium Solvent	Hexachlorobenzene	180-54673-1	0.13	0.065	mg/L	U	0.13	Waukesha	2016
Premium Solvent	Hexachlorobenzene	180-54674-1	0.13	0.065	mg/L	U	0.13	Waukesha	2016
Premium Solvent	Hexachlorobenzene	180-54675-1	0.13	0.065	mg/L	U	0.13	Waukesha	2016
Premium Solvent	Hexachlorobenzene	180-54676-1	0.13	0.065	mg/L	U	0.13	Waukesha	2016
Premium Solvent	Hexachlorobenzene	180-54677-1	0.13	0.065	mg/L	U	0.13	Waukesha	2016
Premium Solvent	Hexachlorobenzene	180-54678-1	0.13	0.065	mg/L	U	0.13	Waukesha	2016
Premium Solvent	Hexachlorobenzene	180-54679-1	0.13	0.065	mg/L	U	0.13	Waukesha	2016
Premium Solvent	Hexachlorobenzene	180-54680-1	0.13	0.065	mg/L	U	0.13	Waukesha	2016
Premium Solvent	Hexachlorobenzene	180-66650-1	0.13	0.065	mg/L	U	0.13	Albuquerque	2017
Premium Solvent	Hexachlorobenzene	180-65687-1	0.13	0.065	mg/L	U	0.13	Archdale	2017
Premium Solvent	Hexachlorobenzene	180-65693-1	0.13	0.065	mg/L	U	0.13	Avon	2017
Premium Solvent	Hexachlorobenzene	180-64613-1	0.13	0.065	mg/L	U	0.13	Chandler	2017
Premium Solvent	Hexachlorobenzene	180-70321-1	0.13	0.065	mg/L	U	0.13	Chesapeake	2017
Premium Solvent	Hexachlorobenzene	180-69209-1	0.13	0.065	mg/L	U	0.13	Clackamas	2017
Premium Solvent	Hexachlorobenzene	180-65928-1	0.13	0.065	mg/L	U	0.13	Cohoes	2017

Premium Solvent	Hexachlorobenzene	180-68416-1	0.13	0.065	mg/L	U	0.13		Farmington	2017
Premium Solvent	Hexachlorobenzene	180-70383-1	0.13	0.065	mg/L	U	0.13		Grand Island	2017
Premium Solvent	Hexachlorobenzene	180-64751-1	0.13	0.065	mg/L	U *	0.13		Kaukauna	2017
Premium Solvent	Hexachlorobenzene	180-64752-1	0.13	0.065	mg/L	U *	0.13		Kaukauna	2017
Premium Solvent	Hexachlorobenzene	180-64753-1	0.13	0.065	mg/L	U *	0.13		Kaukauna	2017
Premium Solvent	Hexachlorobenzene	180-65696-1	0.13	0.065	mg/L	U	0.13		Lackawanna	2017
Premium Solvent	Hexachlorobenzene	180-69242-1	0.13	0.065	mg/L	U	0.13		Oklahoma City	2017
Premium Solvent	Hexachlorobenzene	180-69237-1	0.13	0.065	mg/L	U	0.13		Omaha	2017
Premium Solvent	Hexachlorobenzene	180-70392-1	0.13	0.065	mg/L	U	0.13		Raleigh	2017
Premium Solvent	Hexachlorobenzene	180-68772-1	0.13	0.065	mg/L	U	0.13		St Pauls	2017
Premium Solvent	Hexachlorobenzene	180-65396-1	0.13	0.065	mg/L	U	0.13		Syracuse	2017
Premium Solvent	Hexachlorobenzene	180-66253-1	0.13	0.065	mg/L	U *	0.13		Vinton	2017
Premium Solvent	Hexachlorobenzene	180-68919-1	0.13	0.065	mg/L	U	0.13		Waukesha	2017
Premium Solvent	Hexachlorobenzene	180-68924-1	0.13	0.065	mg/L	U	0.13		Waukesha	2017
Premium Solvent	Hexachlorobenzene	180-68925-1	0.13	0.065	mg/L	U	0.13		Waukesha	2017
Premium Solvent	Hexachlorobenzene	180-64796-1	0.13	0.065	mg/L	U *	0.13		Wichita	2017
Premium Solvent	Hexachlorobenzene	180-60141-1	0.13	0.065	mg/L	U	0.13		Avon	2017
Premium Solvent	Hexachlorobenzene	180-60012-1	0.13	0.065	mg/L	U	0.13		Chesapeake	2017
Premium Solvent	Hexachlorobenzene	180-59840-1	0.13	0.065	mg/L	U	0.13	52	Cohoes	2017
Premium Solvent	Hexachlorobenzene	180-59969-1	0.13	0.065	mg/L	U	0.13		Lackawanna	2017
Premium Solvent	Hexachlorobenzene	180-60895-1	0.13	0.065	mg/L	U	0.13		Archdale	2017
Premium Solvent	Hexachlorobenzene	180-60618-1	0.13	0.065	mg/L	U	0.13		Barre	2017
Premium Solvent	Hexachlorobenzene	180-81014-1	0.13	0.065	mg/L	U H	0.13		Albuquerque	2018
Premium Solvent	Hexachlorobenzene	180-77400-1	0.13	0.065	mg/L	U	0.13		Archdale	2018
Premium Solvent	Hexachlorobenzene	180-80742-1	0.13	0.065	mg/L	U	0.13		Avon	2018
Premium Solvent	Hexachlorobenzene	180-81163-1	0.13	0.065	mg/L	U	0.13		Barre	2018
Premium Solvent	Hexachlorobenzene	180-77125-1	0.13	0.065	mg/L	U	0.13		Boise	2018
Premium Solvent	Hexachlorobenzene	180-77004-1	0.13	0.065	mg/L	U	0.13		Chandler	2018
Premium Solvent	Hexachlorobenzene	180-77391-1	0.13	0.065	mg/L	U	0.13		Chester	2018
Premium Solvent	Hexachlorobenzene	180-82330-1	0.13	0.065	mg/L	U	0.13		Clackamas	2018
Premium Solvent	Hexachlorobenzene	180-77710-1	0.13	0.065	mg/L	U	0.13		Cohoes	2018
Premium Solvent	Hexachlorobenzene	180-81146-1	0.13	0.065	mg/L	U	0.13		Farmington	2018
Premium Solvent	Hexachlorobenzene	180-77381-1	0.13	0.065	mg/L	U	0.13		Kaukauna	2018
Premium Solvent	Hexachlorobenzene	180-77382-1	0.13	0.065	mg/L	U	0.13		Kaukauna	2018

Premium Solvent	Hexachlorobenzene	180-77383-1	0.13	0.065	mg/L	U	0.13	Kaukauna	2018
Premium Solvent	Hexachlorobenzene	180-77070-1	0.13	0.065	mg/L	U	0.13	Lackawanna	2018
Premium Solvent	Hexachlorobenzene	180-80014-1	0.13	0.065	mg/L	U	0.13	Oklahoma City	2018
Premium Solvent	Hexachlorobenzene	180-80848-1	0.13	0.065	mg/L	U	0.13	Sacramento	2018
Premium Solvent	Hexachlorobenzene	180-81823-1	0.13	0.065	mg/L	U	0.13	Salisbury	2018
Premium Solvent	Hexachlorobenzene	180-76988-1	0.13	0.065	mg/L	U	0.13	Salt Lake City	2018
Premium Solvent	Hexachlorobenzene	180-78677-1	0.13	0.065	mg/L	U	0.13	Santa Ana	2018
Premium Solvent	Hexachlorobenzene	180-78463-1	0.13	0.065	mg/L	U	0.13	St Pauls	2018
Premium Solvent	Hexachlorobenzene	180-76683-1	0.13	0.065	mg/L	U	0.13	Syracuse	2018
Premium Solvent	Hexachlorobenzene	180-79370-1	0.13	0.065	mg/L	U	0.13	Tampa	2018
Premium Solvent	Hexachlorobenzene	180-78689-1	0.13	0.065	mg/L	U	0.13	Vinton	2018
Premium Solvent	Hexachlorobenzene	180-76265-1	0.13	0.065	mg/L	U	0.13	Waukesha	2018
Premium Solvent	Hexachlorobenzene	180-76266-1	0.13	0.065	mg/L	U	0.13	Waukesha	2018
Premium Solvent	Hexachlorobenzene	180-76267-1	0.13	0.065	mg/L	U	0.13	Waukesha	2018
Premium Solvent	Hexachlorobenzene	180-76262-1	0.13	0.065	mg/L	U	0.13	Wichita	2018
Premium Solvent	Hexachlorobenzene	180-72259-2	0.13	0.065	mg/L	U	0.13	Chester	2018
Premium Solvent	Hexachlorobenzene	180-72871-1	0.13	0.065	mg/L	U	0.13	Sacramento	2018
Premium Solvent	Hexachlorobenzene	180-71540-1	0.13	0.065	mg/L	U	0.13	Salisbury	2018
Premium Solvent	Hexachlorobenzene	180-71594-1	0.13	0.065	mg/L	U	0.13	Santa Ana	2018
Premium Solvent	Hexachlorobenzene	180-74277-1	0.13	0.065	mg/L	U	0.13	Tallahassee	2018
Premium Solvent	Hexachlorobenzene	180-80012-1	20	10	mg/L	U	20	Oklahoma City	2018
Premium Solvent	Hexachlorobutadiene	180-58611-1	0.09	0.045	mg/L	U	0.09	Sacremento	2016
Premium Solvent	Hexachlorobutadiene	180-58744-1	0.13	0.065	mg/L	U	0.13	Albuquerque	2016
Premium Solvent	Hexachlorobutadiene	180-52527-1	0.13	0.065	mg/L	U	0.13	Boise	2016
Premium Solvent	Hexachlorobutadiene	180-53494-1	0.13	0.065	mg/L	U	0.13	Chandler	2016
Premium Solvent	Hexachlorobutadiene	180-58394-1	0.13	0.065	mg/L	U	0.13	Charlotte	2016
Premium Solvent	Hexachlorobutadiene	180-54771-1	0.13	0.065	mg/L	U	0.13	Chester	2016
Premium Solvent	Hexachlorobutadiene	180-58680-1	0.13	0.065	mg/L	U	0.13	Clackamas	2016
Premium Solvent	Hexachlorobutadiene	180-56685-1	0.13	0.065	mg/L	U	0.13	Farmington	2016
Premium Solvent	Hexachlorobutadiene	180-53961-1	0.13	0.065	mg/L	U	0.13	Kaukauna	2016
Premium Solvent	Hexachlorobutadiene	180-53962-1	0.13	0.065	mg/L	U	0.13	Kaukauna	2016
Premium Solvent	Hexachlorobutadiene	180-53963-1	0.13	0.065	mg/L	U	0.13	Kaukauna	2016
Premium Solvent	Hexachlorobutadiene	180-57964-1	0.13	0.065	mg/L	U	0.13	Omaha	2016
Premium Solvent	Hexachlorobutadiene	180-56003-1	0.13	0.065	mg/L	U	0.13	St. Pauls	2016

Premium Solvent	Hexachlorobutadiene	180-55533-1	0.13	0.065	mg/L	U	0.13	Syracuse	2016
Premium Solvent	Hexachlorobutadiene	180-58138-1	0.13	0.065	mg/L	U	0.13	Tampa	2016
Premium Solvent	Hexachlorobutadiene	180-58732-1	0.13	0.065	mg/L	U	0.13	Tulsa	2016
Premium Solvent	Hexachlorobutadiene	180-58266-1	0.13	0.065	mg/L	U	0.13	Vinton	2016
Premium Solvent	Hexachlorobutadiene	180-54672-1	0.13	0.065	mg/L	U	0.13	Waukesha	2016
Premium Solvent	Hexachlorobutadiene	180-54673-1	0.13	0.065	mg/L	U	0.13	Waukesha	2016
Premium Solvent	Hexachlorobutadiene	180-54674-1	0.13	0.065	mg/L	U	0.13	Waukesha	2016
Premium Solvent	Hexachlorobutadiene	180-54675-1	0.13	0.065	mg/L	U	0.13	Waukesha	2016
Premium Solvent	Hexachlorobutadiene	180-54676-1	0.13	0.065	mg/L	U	0.13	Waukesha	2016
Premium Solvent	Hexachlorobutadiene	180-54677-1	0.13	0.065	mg/L	U	0.13	Waukesha	2016
Premium Solvent	Hexachlorobutadiene	180-54678-1	0.13	0.065	mg/L	U	0.13	Waukesha	2016
Premium Solvent	Hexachlorobutadiene	180-54679-1	0.13	0.065	mg/L	U	0.13	Waukesha	2016
Premium Solvent	Hexachlorobutadiene	180-54680-1	0.13	0.065	mg/L	U	0.13	Waukesha	2016
Premium Solvent	Hexachlorobutadiene	180-66650-1	0.13	0.065	mg/L	U *	0.13	Albuquerque	2017
Premium Solvent	Hexachlorobutadiene	180-65687-1	0.13	0.065	mg/L	U	0.13	Archdale	2017
Premium Solvent	Hexachlorobutadiene	180-65693-1	0.13	0.065	mg/L	U	0.13	Avon	2017
Premium Solvent	Hexachlorobutadiene	180-64613-1	0.13	0.065	mg/L	U	0.13	Chandler	2017
Premium Solvent	Hexachlorobutadiene	180-70321-1	0.13	0.065	mg/L	U	0.13	Chesapeake	2017
Premium Solvent	Hexachlorobutadiene	180-69209-1	0.13	0.065	mg/L	U	0.13	Clackamas	2017
Premium Solvent	Hexachlorobutadiene	180-68416-1	0.13	0.065	mg/L	U	0.13	Farmington	2017
Premium Solvent	Hexachlorobutadiene	180-70383-1	0.13	0.065	mg/L	U	0.13	Grand Island	2017
Premium Solvent	Hexachlorobutadiene	180-64751-1	0.13	0.065	mg/L	U *	0.13	Kaukauna	2017
Premium Solvent	Hexachlorobutadiene	180-64752-1	0.13	0.065	mg/L	U *	0.13	Kaukauna	2017
Premium Solvent	Hexachlorobutadiene	180-64753-1	0.13	0.065	mg/L	U *	0.13	Kaukauna	2017
Premium Solvent	Hexachlorobutadiene	180-65696-1	0.13	0.065	mg/L	U	0.13	Lackawanna	2017
Premium Solvent	Hexachlorobutadiene	180-69242-1	0.13	0.065	mg/L	U	0.13	Oklahoma City	2017
Premium Solvent	Hexachlorobutadiene	180-69237-1	0.13	0.065	mg/L	U	0.13	Omaha	2017
Premium Solvent	Hexachlorobutadiene	180-70392-1	0.13	0.065	mg/L	U	0.13	Raleigh	2017
Premium Solvent	Hexachlorobutadiene	180-68772-1	0.13	0.065	mg/L	U	0.13	St Pauls	2017
Premium Solvent	Hexachlorobutadiene	180-65396-1	0.13	0.065	mg/L	U	0.13	Syracuse	2017
Premium Solvent	Hexachlorobutadiene	180-66253-1	0.13	0.065	mg/L	U *	0.13	Vinton	2017
Premium Solvent	Hexachlorobutadiene	180-68919-1	0.13	0.065	mg/L	U	0.13	Waukesha	2017
Premium Solvent	Hexachlorobutadiene	180-68924-1	0.13	0.065	mg/L	U	0.13	Waukesha	2017
Premium Solvent	Hexachlorobutadiene	180-68925-1	0.13	0.065	mg/L	U	0.13	Waukesha	2017

Premium Solvent	Hexachlorobutadiene	180-64796-1	0.13	0.065	mg/L	U *	0.13		Wichita	2017
Premium Solvent	Hexachlorobutadiene	180-60141-1	0.13	0.065	mg/L	U	0.13		Avon	2017
Premium Solvent	Hexachlorobutadiene	180-60012-1	0.13	0.065	mg/L	U	0.13		Chesapeake	2017
Premium Solvent	Hexachlorobutadiene	180-59840-1	0.13	0.065	mg/L	U	0.13		Cohoes	2017
Premium Solvent	Hexachlorobutadiene	180-59969-1	0.13	0.065	mg/L	U	0.13	52	Lackawanna	2017
Premium Solvent	Hexachlorobutadiene	180-60895-1	0.13	0.065	mg/L	U	0.13		Archdale	2017
Premium Solvent	Hexachlorobutadiene	180-60618-1	0.13	0.065	mg/L	U	0.13		Barre	2017
Premium Solvent	Hexachlorobutadiene	180-81014-1	0.13	0.065	mg/L	U H	0.13		Albuquerque	2018
Premium Solvent	Hexachlorobutadiene	180-77400-1	0.13	0.065	mg/L	U	0.13		Archdale	2018
Premium Solvent	Hexachlorobutadiene	180-80742-1	0.13	0.065	mg/L	U	0.13		Avon	2018
Premium Solvent	Hexachlorobutadiene	180-81163-1	0.13	0.065	mg/L	U	0.13		Barre	2018
Premium Solvent	Hexachlorobutadiene	180-77125-1	0.13	0.065	mg/L	U	0.13		Boise	2018
Premium Solvent	Hexachlorobutadiene	180-77004-1	0.13	0.065	mg/L	U	0.13		Chandler	2018
Premium Solvent	Hexachlorobutadiene	180-77391-1	0.13	0.065	mg/L	U	0.13		Chester	2018
Premium Solvent	Hexachlorobutadiene	180-82330-1	0.13	0.065	mg/L	U	0.13		Clackamas	2018
Premium Solvent	Hexachlorobutadiene	180-77710-1	0.13	0.065	mg/L	U	0.13		Cohoes	2018
Premium Solvent	Hexachlorobutadiene	180-81146-1	0.13	0.065	mg/L	U	0.13		Farmington	2018
Premium Solvent	Hexachlorobutadiene	180-77381-1	0.13	0.065	mg/L	U	0.13		Kaukauna	2018
Premium Solvent	Hexachlorobutadiene	180-77382-1	0.13	0.065	mg/L	U	0.13		Kaukauna	2018
Premium Solvent	Hexachlorobutadiene	180-77383-1	0.13	0.065	mg/L	U	0.13		Kaukauna	2018
Premium Solvent	Hexachlorobutadiene	180-77070-1	0.13	0.065	mg/L	U	0.13		Lackawanna	2018
Premium Solvent	Hexachlorobutadiene	180-80014-1	0.13	0.065	mg/L	U	0.13		Oklahoma City	2018
Premium Solvent	Hexachlorobutadiene	180-80848-1	0.13	0.065	mg/L	U	0.13		Sacramento	2018
Premium Solvent	Hexachlorobutadiene	180-81823-1	0.13	0.065	mg/L	U	0.13		Salisbury	2018
Premium Solvent	Hexachlorobutadiene	180-76988-1	0.13	0.065	mg/L	U	0.13		Salt Lake City	2018
Premium Solvent	Hexachlorobutadiene	180-78677-1	0.13	0.065	mg/L	U	0.13		Santa Ana	2018
Premium Solvent	Hexachlorobutadiene	180-78463-1	0.13	0.065	mg/L	U	0.13		St Pauls	2018
Premium Solvent	Hexachlorobutadiene	180-76683-1	0.13	0.065	mg/L	U	0.13		Syracuse	2018
Premium Solvent	Hexachlorobutadiene	180-79370-1	0.13	0.065	mg/L	U	0.13		Tampa	2018
Premium Solvent	Hexachlorobutadiene	180-78689-1	0.13	0.065	mg/L	U	0.13		Vinton	2018
Premium Solvent	Hexachlorobutadiene	180-76265-1	0.13	0.065	mg/L	U	0.13		Waukesha	2018
Premium Solvent	Hexachlorobutadiene	180-76266-1	0.13	0.065	mg/L	U	0.13		Waukesha	2018
Premium Solvent	Hexachlorobutadiene	180-76267-1	0.13	0.065	mg/L	U	0.13		Waukesha	2018
Premium Solvent	Hexachlorobutadiene	180-76262-1	0.13	0.065	mg/L	U	0.13		Wichita	2018

Premium Solvent	Hexachlorobutadiene	180-72259-2	0.13	0.065	mg/L	U	0.13	Chester	2018
Premium Solvent	Hexachlorobutadiene	180-72871-1	0.13	0.065	mg/L	U	0.13	Sacramento	2018
Premium Solvent	Hexachlorobutadiene	180-71540-1	0.13	0.065	mg/L	U	0.13	Salisbury	2018
Premium Solvent	Hexachlorobutadiene	180-71594-1	0.13	0.065	mg/L	U	0.13	Santa Ana	2018
Premium Solvent	Hexachlorobutadiene	180-74277-1	0.13	0.065	mg/L	U	0.13	Tallahassee	2018
Premium Solvent	Hexachlorobutadiene	180-65928-1	0.25	0.25	mg/L	p	0.13	Cohoes	2017
Premium Solvent	Hexachlorobutadiene	180-80012-1	20	10	mg/L	U	20	Oklahoma City	2018
Premium Solvent	Hexachloroethane	180-58611-1	0.09	0.045	mg/L	U	0.09	Sacremento	2016
Premium Solvent	Hexachloroethane	180-58744-1	0.13	0.065	mg/L	U	0.13	Albuquerque	2016
Premium Solvent	Hexachloroethane	180-52527-1	0.13	0.065	mg/L	U	0.13	Boise	2016
Premium Solvent	Hexachloroethane	180-53494-1	0.13	0.065	mg/L	U	0.13	Chandler	2016
Premium Solvent	Hexachloroethane	180-58394-1	0.13	0.065	mg/L	U	0.13	Charlotte	2016
Premium Solvent	Hexachloroethane	180-54771-1	0.13	0.065	mg/L	U	0.13	Chester	2016
Premium Solvent	Hexachloroethane	180-58680-1	0.13	0.065	mg/L	U	0.13	Clackamas	2016
Premium Solvent	Hexachloroethane	180-56685-1	0.13	0.065	mg/L	U	0.13	Farmington	2016
Premium Solvent	Hexachloroethane	180-53961-1	0.13	0.065	mg/L	U	0.13	Kaukauna	2016
Premium Solvent	Hexachloroethane	180-53962-1	0.13	0.065	mg/L	U	0.13	Kaukauna	2016
Premium Solvent	Hexachloroethane	180-53963-1	0.13	0.065	mg/L	U	0.13	Kaukauna	2016
Premium Solvent	Hexachloroethane	180-57964-1	0.13	0.065	mg/L	U	0.13	Omaha	2016
Premium Solvent	Hexachloroethane	180-56003-1	0.13	0.065	mg/L	U	0.13	St. Pauls	2016
Premium Solvent	Hexachloroethane	180-55533-1	0.13	0.065	mg/L	U	0.13	Syracuse	2016
Premium Solvent	Hexachloroethane	180-58138-1	0.13	0.065	mg/L	U	0.13	Tampa	2016
Premium Solvent	Hexachloroethane	180-58732-1	0.13	0.065	mg/L	U	0.13	Tulsa	2016
Premium Solvent	Hexachloroethane	180-58266-1	0.13	0.065	mg/L	U	0.13	Vinton	2016
Premium Solvent	Hexachloroethane	180-54672-1	0.13	0.065	mg/L	U	0.13	Waukesha	2016
Premium Solvent	Hexachloroethane	180-54673-1	0.13	0.065	mg/L	U	0.13	Waukesha	2016
Premium Solvent	Hexachloroethane	180-54674-1	0.13	0.065	mg/L	U	0.13	Waukesha	2016
Premium Solvent	Hexachloroethane	180-54675-1	0.13	0.065	mg/L	U	0.13	Waukesha	2016
Premium Solvent	Hexachloroethane	180-54676-1	0.13	0.065	mg/L	U	0.13	Waukesha	2016
Premium Solvent	Hexachloroethane	180-54677-1	0.13	0.065	mg/L	U	0.13	Waukesha	2016
Premium Solvent	Hexachloroethane	180-54678-1	0.13	0.065	mg/L	U	0.13	Waukesha	2016
Premium Solvent	Hexachloroethane	180-54679-1	0.13	0.065	mg/L	U	0.13	Waukesha	2016
Premium Solvent	Hexachloroethane	180-54680-1	0.13	0.065	mg/L	U	0.13	Waukesha	2016
Premium Solvent	Hexachloroethane	180-66650-1	0.13	0.065	mg/L	U *	0.13	Albuquerque	2017

Premium Solvent	Hexachloroethane	180-65687-1	0.13	0.065	mg/L	U	0.13		Archdale	2017
Premium Solvent	Hexachloroethane	180-65693-1	0.13	0.065	mg/L	U	0.13		Avon	2017
Premium Solvent	Hexachloroethane	180-64613-1	0.13	0.065	mg/L	U	0.13		Chandler	2017
Premium Solvent	Hexachloroethane	180-70321-1	0.13	0.065	mg/L	U	0.13		Chesapeake	2017
Premium Solvent	Hexachloroethane	180-69209-1	0.13	0.065	mg/L	U	0.13		Clackamas	2017
Premium Solvent	Hexachloroethane	180-68416-1	0.13	0.065	mg/L	U	0.13		Farmington	2017
Premium Solvent	Hexachloroethane	180-70383-1	0.13	0.065	mg/L	U	0.13		Grand Island	2017
Premium Solvent	Hexachloroethane	180-64751-1	0.13	0.065	mg/L	U *	0.13		Kaukauna	2017
Premium Solvent	Hexachloroethane	180-64752-1	0.13	0.065	mg/L	U *	0.13		Kaukauna	2017
Premium Solvent	Hexachloroethane	180-64753-1	0.13	0.065	mg/L	U *	0.13		Kaukauna	2017
Premium Solvent	Hexachloroethane	180-65696-1	0.13	0.065	mg/L	U	0.13		Lackawanna	2017
Premium Solvent	Hexachloroethane	180-69242-1	0.13	0.065	mg/L	U	0.13		Oklahoma City	2017
Premium Solvent	Hexachloroethane	180-69237-1	0.13	0.065	mg/L	U	0.13		Omaha	2017
Premium Solvent	Hexachloroethane	180-70392-1	0.13	0.065	mg/L	U	0.13		Raleigh	2017
Premium Solvent	Hexachloroethane	180-68772-1	0.13	0.065	mg/L	U	0.13		St Pauls	2017
Premium Solvent	Hexachloroethane	180-65396-1	0.13	0.065	mg/L	U	0.13		Syracuse	2017
Premium Solvent	Hexachloroethane	180-66253-1	0.13	0.065	mg/L	U	0.13		Vinton	2017
Premium Solvent	Hexachloroethane	180-68919-1	0.13	0.065	mg/L	U	0.13		Waukesha	2017
Premium Solvent	Hexachloroethane	180-68924-1	0.13	0.065	mg/L	U	0.13		Waukesha	2017
Premium Solvent	Hexachloroethane	180-68925-1	0.13	0.065	mg/L	U	0.13		Waukesha	2017
Premium Solvent	Hexachloroethane	180-64796-1	0.13	0.065	mg/L	U *	0.13		Wichita	2017
Premium Solvent	Hexachloroethane	180-60141-1	0.13	0.065	mg/L	U	0.13		Avon	2017
Premium Solvent	Hexachloroethane	180-60012-1	0.13	0.065	mg/L	U	0.13		Chesapeake	2017
Premium Solvent	Hexachloroethane	180-59840-1	0.13	0.065	mg/L	U	0.13		Cohoes	2017
Premium Solvent	Hexachloroethane	180-59969-1	0.13	0.065	mg/L	U	0.13	52	Lackawanna	2017
Premium Solvent	Hexachloroethane	180-60895-1	0.13	0.065	mg/L	U	0.13		Archdale	2017
Premium Solvent	Hexachloroethane	180-60618-1	0.13	0.065	mg/L	U	0.13		Barre	2017
Premium Solvent	Hexachloroethane	180-81014-1	0.13	0.065	mg/L	U H	0.13		Albuquerque	2018
Premium Solvent	Hexachloroethane	180-77400-1	0.13	0.065	mg/L	U	0.13		Archdale	2018
Premium Solvent	Hexachloroethane	180-80742-1	0.13	0.065	mg/L	U	0.13		Avon	2018
Premium Solvent	Hexachloroethane	180-81163-1	0.13	0.065	mg/L	U	0.13		Barre	2018
Premium Solvent	Hexachloroethane	180-77125-1	0.13	0.065	mg/L	U	0.13		Boise	2018
Premium Solvent	Hexachloroethane	180-77004-1	0.13	0.065	mg/L	U	0.13		Chandler	2018
Premium Solvent	Hexachloroethane	180-77391-1	0.13	0.065	mg/L	U	0.13		Chester	2018

Premium Solvent	Hexachloroethane	180-82330-1	0.13	0.065	mg/L	U	0.13	Clackamas	2018
Premium Solvent	Hexachloroethane	180-77710-1	0.13	0.065	mg/L	U	0.13	Cohoes	2018
Premium Solvent	Hexachloroethane	180-81146-1	0.13	0.065	mg/L	U	0.13	Farmington	2018
Premium Solvent	Hexachloroethane	180-77381-1	0.13	0.065	mg/L	U	0.13	Kaukauna	2018
Premium Solvent	Hexachloroethane	180-77382-1	0.13	0.065	mg/L	U	0.13	Kaukauna	2018
Premium Solvent	Hexachloroethane	180-77383-1	0.13	0.065	mg/L	U	0.13	Kaukauna	2018
Premium Solvent	Hexachloroethane	180-77070-1	0.13	0.065	mg/L	U	0.13	Lackawanna	2018
Premium Solvent	Hexachloroethane	180-80014-1	0.13	0.065	mg/L	U	0.13	Oklahoma City	2018
Premium Solvent	Hexachloroethane	180-80848-1	0.13	0.065	mg/L	U	0.13	Sacramento	2018
Premium Solvent	Hexachloroethane	180-81823-1	0.13	0.065	mg/L	U	0.13	Salisbury	2018
Premium Solvent	Hexachloroethane	180-76988-1	0.13	0.065	mg/L	U	0.13	Salt Lake City	2018
Premium Solvent	Hexachloroethane	180-78677-1	0.13	0.065	mg/L	U	0.13	Santa Ana	2018
Premium Solvent	Hexachloroethane	180-78463-1	0.13	0.065	mg/L	U	0.13	St Pauls	2018
Premium Solvent	Hexachloroethane	180-76683-1	0.13	0.065	mg/L	U	0.13	Syracuse	2018
Premium Solvent	Hexachloroethane	180-79370-1	0.13	0.065	mg/L	U	0.13	Tampa	2018
Premium Solvent	Hexachloroethane	180-78689-1	0.13	0.065	mg/L	U	0.13	Vinton	2018
Premium Solvent	Hexachloroethane	180-76265-1	0.13	0.065	mg/L	U	0.13	Waukesha	2018
Premium Solvent	Hexachloroethane	180-76266-1	0.13	0.065	mg/L	U	0.13	Waukesha	2018
Premium Solvent	Hexachloroethane	180-76267-1	0.13	0.065	mg/L	U	0.13	Waukesha	2018
Premium Solvent	Hexachloroethane	180-76262-1	0.13	0.065	mg/L	U	0.13	Wichita	2018
Premium Solvent	Hexachloroethane	180-72259-2	0.13	0.065	mg/L	U	0.13	Chester	2018
Premium Solvent	Hexachloroethane	180-72871-1	0.13	0.065	mg/L	U	0.13	Sacramento	2018
Premium Solvent	Hexachloroethane	180-71540-1	0.13	0.065	mg/L	U	0.13	Salisbury	2018
Premium Solvent	Hexachloroethane	180-71594-1	0.13	0.065	mg/L	U	0.13	Santa Ana	2018
Premium Solvent	Hexachloroethane	180-74277-1	0.13	0.065	mg/L	U	0.13	Tallahassee	2018
Premium Solvent	Hexachloroethane	180-65928-1	1.7	1.7	mg/L		0.13	Cohoes	2017
Premium Solvent	Hexachloroethane	180-80012-1	20	10	mg/L	U	20	Oklahoma City	2018
Premium Solvent	Lead	180-53963-1	0.25	0.25	mg/L	J	1	Kaukauna	2016
Premium Solvent	Lead	180-58611-1	0.58	0.29	mg/L	U	0.58	Sacremento	2016
Premium Solvent	Lead	180-70392-1	0.29	0.29	mg/L	J	1	Raleigh	2017
Premium Solvent	Lead	180-78689-1	0.33	0.33	mg/L	J	1	Vinton	2018
Premium Solvent	Lead	180-70383-1	0.34	0.34	mg/L	J	1	Grand Island	2017
Premium Solvent	Lead	180-81014-1	0.34	0.34	mg/L	J	1	Albuquerque	2018
Premium Solvent	Lead	180-77070-1	0.34	0.34	mg/L	J	1	Lackawanna	2018

Premium Solvent	Lead	180-54679-1	0.35	0.35	mg/L	J	1	Waukesha	2016
Premium Solvent	Lead	180-52527-1	0.36	0.36	mg/L	J	1	Boise	2016
Premium Solvent	Lead	180-56003-1	0.37	0.37	mg/L	J	1	St. Pauls	2016
Premium Solvent	Lead	180-68772-1	0.37	0.37	mg/L	J	1	St Pauls	2017
Premium Solvent	Lead	180-60141-1	0.41	0.41	mg/L	J	1	Avon	2017
Premium Solvent	Lead	180-77391-1	0.41	0.41	mg/L	J	1	Chester	2018
Premium Solvent	Lead	180-69237-1	0.42	0.42	mg/L	J	1	Omaha	2017
Premium Solvent	Lead	180-54771-1	0.48	0.48	mg/L	J	1	Chester	2016
Premium Solvent	Lead	180-66253-1	0.48	0.48	mg/L	J	1	Vinton	2017
Premium Solvent	Lead	180-77400-1	0.48	0.48	mg/L	J	1	Archdale	2018
Premium Solvent	Lead	180-53494-1	1	0.5	mg/L	U	1	Chandler	2016
Premium Solvent	Lead	180-58394-1	1	0.5	mg/L	U	1	Charlotte	2016
Premium Solvent	Lead	180-58680-1	1	0.5	mg/L	U	1	Clackamas	2016
Premium Solvent	Lead	180-56685-1	1	0.5	mg/L	U	1	Farmington	2016
Premium Solvent	Lead	180-53961-1	1	0.5	mg/L	U	1	Kaukauna	2016
Premium Solvent	Lead	180-58138-1	1	0.5	mg/L	U	1	Tampa	2016
Premium Solvent	Lead	180-58732-1	1	0.5	mg/L	U	1	Tulsa	2016
Premium Solvent	Lead	180-58266-1	1	0.5	mg/L	U	1	Vinton	2016
Premium Solvent	Lead	180-54672-1	1	0.5	mg/L	U	1	Waukesha	2016
Premium Solvent	Lead	180-54674-1	1	0.5	mg/L	U	1	Waukesha	2016
Premium Solvent	Lead	180-54675-1	1	0.5	mg/L	U	1	Waukesha	2016
Premium Solvent	Lead	180-54676-1	1	0.5	mg/L	U	1	Waukesha	2016
Premium Solvent	Lead	180-54678-1	1	0.5	mg/L	U	1	Waukesha	2016
Premium Solvent	Lead	180-66650-1	1	0.5	mg/L	U	1	Albuquerque	2017
Premium Solvent	Lead	180-65687-1	1	0.5	mg/L	U	1	Archdale	2017
Premium Solvent	Lead	180-65693-1	1	0.5	mg/L	U	1	Avon	2017
Premium Solvent	Lead	180-64613-1	1	0.5	mg/L	U	1	Chandler	2017
Premium Solvent	Lead	180-70321-1	1	0.5	mg/L	U	1	Chesapeake	2017
Premium Solvent	Lead	180-69209-1	1	0.5	mg/L	U	1	Clackamas	2017
Premium Solvent	Lead	180-68416-1	1	0.5	mg/L	U	1	Farmington	2017
Premium Solvent	Lead	180-64751-1	1	0.5	mg/L	U	1	Kaukauna	2017
Premium Solvent	Lead	180-64753-1	1	0.5	mg/L	U	1	Kaukauna	2017
Premium Solvent	Lead	180-68919-1	1	0.5	mg/L	U	1	Waukesha	2017
Premium Solvent	Lead	180-64796-1	0.5	0.5	mg/L	J	1	Wichita	2017

Premium Solvent	Lead	180-60012-1	1	0.5	mg/L	U	1		Chesapeake	2017
Premium Solvent	Lead	180-59840-1	1	0.5	mg/L	U	1		Cohoes	2017
Premium Solvent	Lead	180-59969-1	1	0.5	mg/L	U	1		Lackawanna	2017
Premium Solvent	Lead	180-60895-1	1	0.5	mg/L	U	1		Archdale	2017
Premium Solvent	Lead	180-80742-1	1	0.5	mg/L	U	1		Avon	2018
Premium Solvent	Lead	180-82330-1	1	0.5	mg/L	U	1		Clackamas	2018
Premium Solvent	Lead	180-77710-1	1	0.5	mg/L	U	1		Cohoes	2018
Premium Solvent	Lead	180-77381-1	1	0.5	mg/L	U	1		Kaukauna	2018
Premium Solvent	Lead	180-77382-1	1	0.5	mg/L	U	1		Kaukauna	2018
Premium Solvent	Lead	180-77383-1	1	0.5	mg/L	U	1		Kaukauna	2018
Premium Solvent	Lead	180-80012-1	1	0.5	mg/L	U	1	52	Oklahoma City	2018
Premium Solvent	Lead	180-80014-1	1	0.5	mg/L	U	1		Oklahoma City	2018
Premium Solvent	Lead	180-80848-1	1	0.5	mg/L	U	1		Sacramento	2018
Premium Solvent	Lead	180-81823-1	1	0.5	mg/L	U	1		Salisbury	2018
Premium Solvent	Lead	180-78677-1	1	0.5	mg/L	U	1		Santa Ana	2018
Premium Solvent	Lead	180-78463-1	1	0.5	mg/L	U	1		St Pauls	2018
Premium Solvent	Lead	180-76265-1	1	0.5	mg/L	U	1		Waukesha	2018
Premium Solvent	Lead	180-76266-1	1	0.5	mg/L	U	1		Waukesha	2018
Premium Solvent	Lead	180-76267-1	1	0.5	mg/L	U	1		Waukesha	2018
Premium Solvent	Lead	180-76262-1	1	0.5	mg/L	U	1		Wichita	2018
Premium Solvent	Lead	180-71540-1	1	0.5	mg/L	U	1		Salisbury	2018
Premium Solvent	Lead	180-74277-1	1	0.5	mg/L	U	1		Tallahassee	2018
Premium Solvent	Lead	180-55533-1	0.58	0.58	mg/L	J	1		Syracuse	2016
Premium Solvent	Lead	180-72871-1	0.61	0.61	mg/L	J	1		Sacramento	2018
Premium Solvent	Lead	180-69242-1	0.62	0.62	mg/L	J	1		Oklahoma City	2017
Premium Solvent	Lead	180-53962-1	1	1	mg/L		1		Kaukauna	2016
Premium Solvent	Lead	180-68924-1	1	1	mg/L		1		Waukesha	2017
Premium Solvent	Lead	180-54677-1	1.2	1.2	mg/L		1		Waukesha	2016
Premium Solvent	Lead	180-71594-1	1.2	1.2	mg/L		1		Santa Ana	2018
Premium Solvent	Lead	180-81163-1	2.1	2.1	mg/L		1		Barre	2018
Premium Solvent	Lead	180-77004-1	2.1	2.1	mg/L		1		Chandler	2018
Premium Solvent	Lead	180-76988-1	2.2	2.2	mg/L		1		Salt Lake City	2018
Premium Solvent	Lead	180-77125-1	2.5	2.5	mg/L		1		Boise	2018
Premium Solvent	Lead	180-65928-1	3	3	mg/L		1		Cohoes	2017

Premium Solvent	Lead	180-81146-1	3	3	mg/L		1	Farmington	2018
Premium Solvent	Lead	180-76683-1	3.2	3.2	mg/L		1	Syracuse	2018
Premium Solvent	Lead	180-65396-1	3.7	3.7	mg/L		1	Syracuse	2017
Premium Solvent	Lead	180-58744-1	3.9	3.9	mg/L		1	Albuquerque	2016
Premium Solvent	Lead	180-72259-2	6.8	6.8	mg/L		1	Chester	2018
Premium Solvent	Lead	180-54680-1	7.5	7.5	mg/L		1	Waukesha	2016
Premium Solvent	Lead	180-79370-1	7.9	7.9	mg/L		1	Tampa	2018
Premium Solvent	Lead	180-54673-1	8.8	8.8	mg/L		1	Waukesha	2016
Premium Solvent	Lead	180-57964-1	16	16	mg/L		1	Omaha	2016
Premium Solvent	Lead	180-60618-1	16	16	mg/L		1	Barre	2017
Premium Solvent	Lead	180-64752-1	22	22	mg/L		1	Kaukauna	2017
Premium Solvent	Lead	180-65696-1	53	53	mg/L		1	Lackawanna	2017
Premium Solvent	Lead	180-68925-1	80	80	mg/L		1	Waukesha	2017
Premium Solvent	Mercury	180-58611-1	0.0054	0.0054	mg/L	J	0.019	Sacremento	2016
Premium Solvent	Mercury	180-76683-1	0.017	0.0085	mg/L	U	0.017	Syracuse	2018
Premium Solvent	Mercury	180-58394-1	0.0087	0.0087	mg/L	J B	0.033	Charlotte	2016
Premium Solvent	Mercury	180-58266-1	0.0087	0.0087	mg/L	J B	0.033	Vinton	2016
Premium Solvent	Mercury	180-58138-1	0.009	0.009	mg/L	J B	0.033	Tampa	2016
Premium Solvent	Mercury	180-58680-1	0.0094	0.0094	mg/L	J B	0.033	Clackamas	2016
Premium Solvent	Mercury	180-59969-1	0.011	0.011	mg/L	J	0.033	Lackawanna	2017
Premium Solvent	Mercury	180-57964-1	0.012	0.012	mg/L	J	0.033	Omaha	2016
Premium Solvent	Mercury	180-58744-1	0.033	0.0165	mg/L	U	0.033	Albuquerque	2016
Premium Solvent	Mercury	180-52527-1	0.033	0.0165	mg/L	U	0.033	Boise	2016
Premium Solvent	Mercury	180-53494-1	0.033	0.0165	mg/L	U	0.033	Chandler	2016
Premium Solvent	Mercury	180-54771-1	0.033	0.0165	mg/L	U	0.033	Chester	2016
Premium Solvent	Mercury	180-56685-1	0.033	0.0165	mg/L	U	0.033	Farmington	2016
Premium Solvent	Mercury	180-53961-1	0.033	0.0165	mg/L	U	0.033	Kaukauna	2016
Premium Solvent	Mercury	180-53962-1	0.033	0.0165	mg/L	U	0.033	Kaukauna	2016
Premium Solvent	Mercury	180-53963-1	0.033	0.0165	mg/L	U	0.033	Kaukauna	2016
Premium Solvent	Mercury	180-56003-1	0.033	0.0165	mg/L	U	0.033	St. Pauls	2016
Premium Solvent	Mercury	180-55533-1	0.033	0.0165	mg/L	U	0.033	Syracuse	2016
Premium Solvent	Mercury	180-58732-1	0.033	0.0165	mg/L	U	0.033	Tulsa	2016
Premium Solvent	Mercury	180-54672-1	0.033	0.0165	mg/L	U	0.033	Waukesha	2016
Premium Solvent	Mercury	180-54673-1	0.033	0.0165	mg/L	U	0.033	Waukesha	2016

Premium Solvent	Mercury	180-54674-1	0.033	0.0165	mg/L	U	0.033		Waukesha	2016
Premium Solvent	Mercury	180-54675-1	0.033	0.0165	mg/L	U	0.033		Waukesha	2016
Premium Solvent	Mercury	180-54676-1	0.033	0.0165	mg/L	U	0.033		Waukesha	2016
Premium Solvent	Mercury	180-54677-1	0.033	0.0165	mg/L	U	0.033		Waukesha	2016
Premium Solvent	Mercury	180-54678-1	0.033	0.0165	mg/L	U	0.033		Waukesha	2016
Premium Solvent	Mercury	180-54679-1	0.033	0.0165	mg/L	U	0.033		Waukesha	2016
Premium Solvent	Mercury	180-54680-1	0.033	0.0165	mg/L	U	0.033		Waukesha	2016
Premium Solvent	Mercury	180-66650-1	0.033	0.0165	mg/L	U	0.033		Albuquerque	2017
Premium Solvent	Mercury	180-65687-1	0.033	0.0165	mg/L	U	0.033		Archdale	2017
Premium Solvent	Mercury	180-65693-1	0.033	0.0165	mg/L	U	0.033		Avon	2017
Premium Solvent	Mercury	180-64613-1	0.033	0.0165	mg/L	U	0.033		Chandler	2017
Premium Solvent	Mercury	180-70321-1	0.033	0.0165	mg/L	U	0.033		Chesapeake	2017
Premium Solvent	Mercury	180-69209-1	0.033	0.0165	mg/L	U	0.033		Clackamas	2017
Premium Solvent	Mercury	180-65928-1	0.033	0.0165	mg/L	U	0.033		Cohoes	2017
Premium Solvent	Mercury	180-68416-1	0.033	0.0165	mg/L	U *	0.033		Farmington	2017
Premium Solvent	Mercury	180-70383-1	0.033	0.0165	mg/L	U	0.033		Grand Island	2017
Premium Solvent	Mercury	180-64751-1	0.033	0.0165	mg/L	U	0.033		Kaukauna	2017
Premium Solvent	Mercury	180-64752-1	0.033	0.0165	mg/L	U	0.033		Kaukauna	2017
Premium Solvent	Mercury	180-64753-1	0.033	0.0165	mg/L	U	0.033		Kaukauna	2017
Premium Solvent	Mercury	180-65696-1	0.033	0.0165	mg/L	U	0.033		Lackawanna	2017
Premium Solvent	Mercury	180-69242-1	0.033	0.0165	mg/L	U	0.033		Oklahoma City	2017
Premium Solvent	Mercury	180-69237-1	0.033	0.0165	mg/L	U	0.033		Omaha	2017
Premium Solvent	Mercury	180-70392-1	0.033	0.0165	mg/L	U	0.033		Raleigh	2017
Premium Solvent	Mercury	180-68772-1	0.033	0.0165	mg/L	U	0.033		St Pauls	2017
Premium Solvent	Mercury	180-65396-1	0.033	0.0165	mg/L	U	0.033		Syracuse	2017
Premium Solvent	Mercury	180-66253-1	0.033	0.0165	mg/L	U	0.033		Vinton	2017
Premium Solvent	Mercury	180-68919-1	0.033	0.0165	mg/L	U	0.033		Waukesha	2017
Premium Solvent	Mercury	180-68924-1	0.033	0.0165	mg/L	U	0.033		Waukesha	2017
Premium Solvent	Mercury	180-68925-1	0.033	0.0165	mg/L	U	0.033		Waukesha	2017
Premium Solvent	Mercury	180-64796-1	0.033	0.0165	mg/L	U	0.033		Wichita	2017
Premium Solvent	Mercury	180-60141-1	0.033	0.0165	mg/L	U F1	0.033	52	Avon	2017
Premium Solvent	Mercury	180-60012-1	0.033	0.0165	mg/L	U	0.033		Chesapeake	2017
Premium Solvent	Mercury	180-59840-1	0.033	0.0165	mg/L	U F1	0.033		Cohoes	2017
Premium Solvent	Mercury	180-60895-1	0.033	0.0165	mg/L	U F1	0.033		Archdale	2017

Premium Solvent	Mercury	180-60618-1	0.033	0.0165	mg/L	U F1 F2	0.033	Barre	2017
Premium Solvent	Mercury	180-81014-1	0.033	0.0165	mg/L	U	0.033	Albuquerque	2018
Premium Solvent	Mercury	180-77400-1	0.033	0.0165	mg/L	U	0.033	Archdale	2018
Premium Solvent	Mercury	180-80742-1	0.033	0.0165	mg/L	U	0.033	Avon	2018
Premium Solvent	Mercury	180-81163-1	0.033	0.0165	mg/L	U	0.033	Barre	2018
Premium Solvent	Mercury	180-77125-1	0.033	0.0165	mg/L	U	0.033	Boise	2018
Premium Solvent	Mercury	180-77004-1	0.033	0.0165	mg/L	U	0.033	Chandler	2018
Premium Solvent	Mercury	180-77391-1	0.033	0.0165	mg/L	U	0.033	Chester	2018
Premium Solvent	Mercury	180-82330-1	0.033	0.0165	mg/L	U F1	0.033	Clackamas	2018
Premium Solvent	Mercury	180-77710-1	0.033	0.0165	mg/L	U	0.033	Cohoes	2018
Premium Solvent	Mercury	180-81146-1	0.033	0.0165	mg/L	U	0.033	Farmington	2018
Premium Solvent	Mercury	180-77381-1	0.033	0.0165	mg/L	U	0.033	Kaukauna	2018
Premium Solvent	Mercury	180-77382-1	0.033	0.0165	mg/L	U	0.033	Kaukauna	2018
Premium Solvent	Mercury	180-77383-1	0.033	0.0165	mg/L	U	0.033	Kaukauna	2018
Premium Solvent	Mercury	180-77070-1	0.033	0.0165	mg/L	U	0.033	Lackawanna	2018
Premium Solvent	Mercury	180-80012-1	0.033	0.0165	mg/L	U	0.033	Oklahoma City	2018
Premium Solvent	Mercury	180-80014-1	0.033	0.0165	mg/L	U	0.033	Oklahoma City	2018
Premium Solvent	Mercury	180-80848-1	0.033	0.0165	mg/L	U ^	0.033	Sacramento	2018
Premium Solvent	Mercury	180-81823-1	0.033	0.0165	mg/L	U F1	0.033	Salisbury	2018
Premium Solvent	Mercury	180-76988-1	0.033	0.0165	mg/L	U	0.033	Salt Lake City	2018
Premium Solvent	Mercury	180-78677-1	0.033	0.0165	mg/L	U	0.033	Santa Ana	2018
Premium Solvent	Mercury	180-78463-1	0.033	0.0165	mg/L	U	0.033	St Pauls	2018
Premium Solvent	Mercury	180-79370-1	0.033	0.0165	mg/L	U	0.033	Tampa	2018
Premium Solvent	Mercury	180-78689-1	0.033	0.0165	mg/L	U	0.033	Vinton	2018
Premium Solvent	Mercury	180-76265-1	0.033	0.0165	mg/L	U	0.033	Waukesha	2018
Premium Solvent	Mercury	180-76266-1	0.033	0.0165	mg/L	U	0.033	Waukesha	2018
Premium Solvent	Mercury	180-76267-1	0.033	0.0165	mg/L	U	0.033	Waukesha	2018
Premium Solvent	Mercury	180-76262-1	0.033	0.0165	mg/L	U	0.033	Wichita	2018
Premium Solvent	Mercury	180-72259-2	0.033	0.0165	mg/L	U	0.033	Chester	2018
Premium Solvent	Mercury	180-72871-1	0.033	0.0165	mg/L	U	0.033	Sacramento	2018
Premium Solvent	Mercury	180-71540-1	0.033	0.0165	mg/L	U	0.033	Salisbury	2018
Premium Solvent	Mercury	180-71594-1	0.033	0.0165	mg/L	U	0.033	Santa Ana	2018
Premium Solvent	Mercury	180-74277-1	0.033	0.0165	mg/L	U	0.033	Tallahassee	2018
Premium Solvent	Methylphenol, 3 & 4	180-58611-1	0.56	0.28	mg/L	U	0.56	Sacremento	2016

Premium Solvent	Methylphenol, 3 & 4	180-58744-1	1	0.5	mg/L	U	1	Albuquerque	2016
Premium Solvent	Methylphenol, 3 & 4	180-52527-1	1	0.5	mg/L	U	1	Boise	2016
Premium Solvent	Methylphenol, 3 & 4	180-53494-1	1	0.5	mg/L	U	1	Chandler	2016
Premium Solvent	Methylphenol, 3 & 4	180-58394-1	1	0.5	mg/L	U	1	Charlotte	2016
Premium Solvent	Methylphenol, 3 & 4	180-54771-1	1	0.5	mg/L	U	1	Chester	2016
Premium Solvent	Methylphenol, 3 & 4	180-58680-1	1	0.5	mg/L	U	1	Clackamas	2016
Premium Solvent	Methylphenol, 3 & 4	180-56685-1	1	0.5	mg/L	U	1	Farmington	2016
Premium Solvent	Methylphenol, 3 & 4	180-53961-1	1	0.5	mg/L	U	1	Kaukauna	2016
Premium Solvent	Methylphenol, 3 & 4	180-53962-1	1	0.5	mg/L	U	1	Kaukauna	2016
Premium Solvent	Methylphenol, 3 & 4	180-53963-1	1	0.5	mg/L	U	1	Kaukauna	2016
Premium Solvent	Methylphenol, 3 & 4	180-57964-1	1	0.5	mg/L	U	1	Omaha	2016
Premium Solvent	Methylphenol, 3 & 4	180-56003-1	1	0.5	mg/L	U	1	St. Pauls	2016
Premium Solvent	Methylphenol, 3 & 4	180-55533-1	1	0.5	mg/L	U	1	Syracuse	2016
Premium Solvent	Methylphenol, 3 & 4	180-58138-1	1	0.5	mg/L	U	1	Tampa	2016
Premium Solvent	Methylphenol, 3 & 4	180-58732-1	1	0.5	mg/L	U	1	Tulsa	2016
Premium Solvent	Methylphenol, 3 & 4	180-58266-1	1	0.5	mg/L	U	1	Vinton	2016
Premium Solvent	Methylphenol, 3 & 4	180-54672-1	1	0.5	mg/L	U	1	Waukesha	2016
Premium Solvent	Methylphenol, 3 & 4	180-54673-1	1	0.5	mg/L	U	1	Waukesha	2016
Premium Solvent	Methylphenol, 3 & 4	180-54674-1	1	0.5	mg/L	U	1	Waukesha	2016
Premium Solvent	Methylphenol, 3 & 4	180-54675-1	1	0.5	mg/L	U	1	Waukesha	2016
Premium Solvent	Methylphenol, 3 & 4	180-54676-1	1	0.5	mg/L	U	1	Waukesha	2016
Premium Solvent	Methylphenol, 3 & 4	180-54677-1	1	0.5	mg/L	U	1	Waukesha	2016
Premium Solvent	Methylphenol, 3 & 4	180-54678-1	1	0.5	mg/L	U	1	Waukesha	2016
Premium Solvent	Methylphenol, 3 & 4	180-54679-1	1	0.5	mg/L	U	1	Waukesha	2016
Premium Solvent	Methylphenol, 3 & 4	180-54680-1	1	0.5	mg/L	U	1	Waukesha	2016
Premium Solvent	Methylphenol, 3 & 4	180-66650-1	1	0.5	mg/L	U	1	Albuquerque	2017
Premium Solvent	Methylphenol, 3 & 4	180-65687-1	1	0.5	mg/L	U	1	Archdale	2017
Premium Solvent	Methylphenol, 3 & 4	180-65693-1	1	0.5	mg/L	U	1	Avon	2017
Premium Solvent	Methylphenol, 3 & 4	180-64613-1	1	0.5	mg/L	U	1	Chandler	2017
Premium Solvent	Methylphenol, 3 & 4	180-70321-1	1	0.5	mg/L	U	1	Chesapeake	2017
Premium Solvent	Methylphenol, 3 & 4	180-69209-1	1	0.5	mg/L	U	1	Clackamas	2017
Premium Solvent	Methylphenol, 3 & 4	180-65928-1	1	0.5	mg/L	U	1	Cohoes	2017
Premium Solvent	Methylphenol, 3 & 4	180-68416-1	1	0.5	mg/L	U	1	Farmington	2017
Premium Solvent	Methylphenol, 3 & 4	180-70383-1	1	0.5	mg/L	U	1	Grand Island	2017

Premium Solvent	Methylphenol, 3 & 4	180-64751-1	1	0.5	mg/L	U	1		Kaukauna	2017
Premium Solvent	Methylphenol, 3 & 4	180-64752-1	1	0.5	mg/L	U	1		Kaukauna	2017
Premium Solvent	Methylphenol, 3 & 4	180-64753-1	1	0.5	mg/L	U	1		Kaukauna	2017
Premium Solvent	Methylphenol, 3 & 4	180-65696-1	1	0.5	mg/L	U	1		Lackawanna	2017
Premium Solvent	Methylphenol, 3 & 4	180-69242-1	1	0.5	mg/L	U	1		Oklahoma City	2017
Premium Solvent	Methylphenol, 3 & 4	180-69237-1	1	0.5	mg/L	U	1		Omaha	2017
Premium Solvent	Methylphenol, 3 & 4	180-70392-1	1	0.5	mg/L	U	1		Raleigh	2017
Premium Solvent	Methylphenol, 3 & 4	180-68772-1	1	0.5	mg/L	U	1		St Pauls	2017
Premium Solvent	Methylphenol, 3 & 4	180-65396-1	1	0.5	mg/L	U	1		Syracuse	2017
Premium Solvent	Methylphenol, 3 & 4	180-66253-1	1	0.5	mg/L	U	1		Vinton	2017
Premium Solvent	Methylphenol, 3 & 4	180-68919-1	1	0.5	mg/L	U	1		Waukesha	2017
Premium Solvent	Methylphenol, 3 & 4	180-68924-1	1	0.5	mg/L	U	1		Waukesha	2017
Premium Solvent	Methylphenol, 3 & 4	180-68925-1	1	0.5	mg/L	U	1		Waukesha	2017
Premium Solvent	Methylphenol, 3 & 4	180-64796-1	1	0.5	mg/L	U	1		Wichita	2017
Premium Solvent	Methylphenol, 3 & 4	180-60141-1	1	0.5	mg/L	U	1		Avon	2017
Premium Solvent	Methylphenol, 3 & 4	180-60012-1	1	0.5	mg/L	U	1		Chesapeake	2017
Premium Solvent	Methylphenol, 3 & 4	180-59840-1	1	0.5	mg/L	U	1	52	Cohoes	2017
Premium Solvent	Methylphenol, 3 & 4	180-59969-1	1	0.5	mg/L	U	1		Lackawanna	2017
Premium Solvent	Methylphenol, 3 & 4	180-60895-1	1	0.5	mg/L	U	1		Archdale	2017
Premium Solvent	Methylphenol, 3 & 4	180-60618-1	1	0.5	mg/L	U	1		Barre	2017
Premium Solvent	Methylphenol, 3 & 4	180-81014-1	1	0.5	mg/L	U H	1		Albuquerque	2018
Premium Solvent	Methylphenol, 3 & 4	180-77400-1	1	0.5	mg/L	U	1		Archdale	2018
Premium Solvent	Methylphenol, 3 & 4	180-80742-1	1	0.5	mg/L	U	1		Avon	2018
Premium Solvent	Methylphenol, 3 & 4	180-81163-1	1	0.5	mg/L	U	1		Barre	2018
Premium Solvent	Methylphenol, 3 & 4	180-77125-1	1	0.5	mg/L	U	1		Boise	2018
Premium Solvent	Methylphenol, 3 & 4	180-77004-1	1	0.5	mg/L	U	1		Chandler	2018
Premium Solvent	Methylphenol, 3 & 4	180-77391-1	1	0.5	mg/L	U	1		Chester	2018
Premium Solvent	Methylphenol, 3 & 4	180-82330-1	1	0.5	mg/L	U	1		Clackamas	2018
Premium Solvent	Methylphenol, 3 & 4	180-77710-1	1	0.5	mg/L	U	1		Cohoes	2018
Premium Solvent	Methylphenol, 3 & 4	180-81146-1	1	0.5	mg/L	U	1		Farmington	2018
Premium Solvent	Methylphenol, 3 & 4	180-77381-1	1	0.5	mg/L	U	1		Kaukauna	2018
Premium Solvent	Methylphenol, 3 & 4	180-77382-1	1	0.5	mg/L	U	1		Kaukauna	2018
Premium Solvent	Methylphenol, 3 & 4	180-77383-1	1	0.5	mg/L	U	1		Kaukauna	2018
Premium Solvent	Methylphenol, 3 & 4	180-77070-1	1	0.5	mg/L	U	1		Lackawanna	2018

Premium Solvent	Methylphenol, 3 & 4	180-80014-1	1	0.5	mg/L	U	1	Oklahoma City	2018
Premium Solvent	Methylphenol, 3 & 4	180-80848-1	1	0.5	mg/L	U	1	Sacramento	2018
Premium Solvent	Methylphenol, 3 & 4	180-81823-1	1	0.5	mg/L	U	1	Salisbury	2018
Premium Solvent	Methylphenol, 3 & 4	180-76988-1	1	0.5	mg/L	U	1	Salt Lake City	2018
Premium Solvent	Methylphenol, 3 & 4	180-78677-1	1	0.5	mg/L	U	1	Santa Ana	2018
Premium Solvent	Methylphenol, 3 & 4	180-78463-1	1	0.5	mg/L	U	1	St Pauls	2018
Premium Solvent	Methylphenol, 3 & 4	180-76683-1	1	0.5	mg/L	U	1	Syracuse	2018
Premium Solvent	Methylphenol, 3 & 4	180-79370-1	1	0.5	mg/L	U	1	Tampa	2018
Premium Solvent	Methylphenol, 3 & 4	180-78689-1	1	0.5	mg/L	U	1	Vinton	2018
Premium Solvent	Methylphenol, 3 & 4	180-76265-1	1	0.5	mg/L	U	1	Waukesha	2018
Premium Solvent	Methylphenol, 3 & 4	180-76266-1	1	0.5	mg/L	U	1	Waukesha	2018
Premium Solvent	Methylphenol, 3 & 4	180-76267-1	1	0.5	mg/L	U	1	Waukesha	2018
Premium Solvent	Methylphenol, 3 & 4	180-76262-1	1	0.5	mg/L	U	1	Wichita	2018
Premium Solvent	Methylphenol, 3 & 4	180-72259-2	1	0.5	mg/L	U	1	Chester	2018
Premium Solvent	Methylphenol, 3 & 4	180-72871-1	1	0.5	mg/L	U	1	Sacramento	2018
Premium Solvent	Methylphenol, 3 & 4	180-71540-1	1	0.5	mg/L	U	1	Salisbury	2018
Premium Solvent	Methylphenol, 3 & 4	180-71594-1	1	0.5	mg/L	U	1	Santa Ana	2018
Premium Solvent	Methylphenol, 3 & 4	180-74277-1	1	0.5	mg/L	U	1	Tallahassee	2018
Premium Solvent	Methylphenol, 3 & 4	180-80012-1	20	10	mg/L	U	20	Oklahoma City	2018
Premium Solvent	Nitrobenzene	180-58611-1	0.56	0.28	mg/L	U	0.56	Sacremento	2016
Premium Solvent	Nitrobenzene	180-58744-1	1	0.5	mg/L	U	1	Albuquerque	2016
Premium Solvent	Nitrobenzene	180-52527-1	1	0.5	mg/L	U	1	Boise	2016
Premium Solvent	Nitrobenzene	180-53494-1	1	0.5	mg/L	U	1	Chandler	2016
Premium Solvent	Nitrobenzene	180-58394-1	1	0.5	mg/L	U	1	Charlotte	2016
Premium Solvent	Nitrobenzene	180-54771-1	1	0.5	mg/L	U	1	Chester	2016
Premium Solvent	Nitrobenzene	180-58680-1	1	0.5	mg/L	U	1	Clackamas	2016
Premium Solvent	Nitrobenzene	180-56685-1	1	0.5	mg/L	U	1	Farmington	2016
Premium Solvent	Nitrobenzene	180-53961-1	1	0.5	mg/L	U	1	Kaukauna	2016
Premium Solvent	Nitrobenzene	180-53962-1	1	0.5	mg/L	U	1	Kaukauna	2016
Premium Solvent	Nitrobenzene	180-53963-1	1	0.5	mg/L	U	1	Kaukauna	2016
Premium Solvent	Nitrobenzene	180-57964-1	1	0.5	mg/L	U	1	Omaha	2016
Premium Solvent	Nitrobenzene	180-56003-1	1	0.5	mg/L	U	1	St. Pauls	2016
Premium Solvent	Nitrobenzene	180-55533-1	1	0.5	mg/L	U	1	Syracuse	2016
Premium Solvent	Nitrobenzene	180-58138-1	1	0.5	mg/L	U	1	Tampa	2016

Premium Solvent	Nitrobenzene	180-58732-1	1	0.5	mg/L	U	1	Tulsa	2016
Premium Solvent	Nitrobenzene	180-58266-1	1	0.5	mg/L	U	1	Vinton	2016
Premium Solvent	Nitrobenzene	180-54672-1	1	0.5	mg/L	U	1	Waukesha	2016
Premium Solvent	Nitrobenzene	180-54673-1	1	0.5	mg/L	U	1	Waukesha	2016
Premium Solvent	Nitrobenzene	180-54674-1	1	0.5	mg/L	U	1	Waukesha	2016
Premium Solvent	Nitrobenzene	180-54675-1	1	0.5	mg/L	U	1	Waukesha	2016
Premium Solvent	Nitrobenzene	180-54676-1	1	0.5	mg/L	U	1	Waukesha	2016
Premium Solvent	Nitrobenzene	180-54677-1	1	0.5	mg/L	U	1	Waukesha	2016
Premium Solvent	Nitrobenzene	180-54678-1	1	0.5	mg/L	U	1	Waukesha	2016
Premium Solvent	Nitrobenzene	180-54679-1	1	0.5	mg/L	U	1	Waukesha	2016
Premium Solvent	Nitrobenzene	180-54680-1	1	0.5	mg/L	U	1	Waukesha	2016
Premium Solvent	Nitrobenzene	180-66650-1	1	0.5	mg/L	U	1	Albuquerque	2017
Premium Solvent	Nitrobenzene	180-65687-1	1	0.5	mg/L	U	1	Archdale	2017
Premium Solvent	Nitrobenzene	180-65693-1	1	0.5	mg/L	U	1	Avon	2017
Premium Solvent	Nitrobenzene	180-64613-1	1	0.5	mg/L	U	1	Chandler	2017
Premium Solvent	Nitrobenzene	180-70321-1	1	0.5	mg/L	U	1	Chesapeake	2017
Premium Solvent	Nitrobenzene	180-69209-1	1	0.5	mg/L	U	1	Clackamas	2017
Premium Solvent	Nitrobenzene	180-65928-1	1	0.5	mg/L	U	1	Cohoes	2017
Premium Solvent	Nitrobenzene	180-68416-1	1	0.5	mg/L	U	1	Farmington	2017
Premium Solvent	Nitrobenzene	180-70383-1	1	0.5	mg/L	U	1	Grand Island	2017
Premium Solvent	Nitrobenzene	180-64751-1	1	0.5	mg/L	U	1	Kaukauna	2017
Premium Solvent	Nitrobenzene	180-64752-1	1	0.5	mg/L	U	1	Kaukauna	2017
Premium Solvent	Nitrobenzene	180-64753-1	1	0.5	mg/L	U	1	Kaukauna	2017
Premium Solvent	Nitrobenzene	180-65696-1	1	0.5	mg/L	U	1	Lackawanna	2017
Premium Solvent	Nitrobenzene	180-69242-1	1	0.5	mg/L	U	1	Oklahoma City	2017
Premium Solvent	Nitrobenzene	180-69237-1	1	0.5	mg/L	U	1	Omaha	2017
Premium Solvent	Nitrobenzene	180-70392-1	1	0.5	mg/L	U	1	Raleigh	2017
Premium Solvent	Nitrobenzene	180-68772-1	1	0.5	mg/L	U	1	St Pauls	2017
Premium Solvent	Nitrobenzene	180-65396-1	1	0.5	mg/L	U	1	Syracuse	2017
Premium Solvent	Nitrobenzene	180-66253-1	1	0.5	mg/L	U	1	Vinton	2017
Premium Solvent	Nitrobenzene	180-68919-1	1	0.5	mg/L	U	1	Waukesha	2017
Premium Solvent	Nitrobenzene	180-68924-1	1	0.5	mg/L	U	1	Waukesha	2017
Premium Solvent	Nitrobenzene	180-68925-1	1	0.5	mg/L	U	1	Waukesha	2017
Premium Solvent	Nitrobenzene	180-64796-1	1	0.5	mg/L	U	1	Wichita	2017

Premium Solvent	Nitrobenzene	180-60141-1	1	0.5	mg/L	U	1		Avon	2017
Premium Solvent	Nitrobenzene	180-60012-1	1	0.5	mg/L	U	1		Chesapeake	2017
Premium Solvent	Nitrobenzene	180-59840-1	1	0.5	mg/L	U	1	52	Cohoes	2017
Premium Solvent	Nitrobenzene	180-59969-1	1	0.5	mg/L	U	1		Lackawanna	2017
Premium Solvent	Nitrobenzene	180-60895-1	1	0.5	mg/L	U	1		Archdale	2017
Premium Solvent	Nitrobenzene	180-60618-1	1	0.5	mg/L	U	1		Barre	2017
Premium Solvent	Nitrobenzene	180-81014-1	1	0.5	mg/L	U H	1		Albuquerque	2018
Premium Solvent	Nitrobenzene	180-77400-1	1	0.5	mg/L	U	1		Archdale	2018
Premium Solvent	Nitrobenzene	180-80742-1	1	0.5	mg/L	U	1		Avon	2018
Premium Solvent	Nitrobenzene	180-81163-1	1	0.5	mg/L	U	1		Barre	2018
Premium Solvent	Nitrobenzene	180-77125-1	1	0.5	mg/L	U	1		Boise	2018
Premium Solvent	Nitrobenzene	180-77004-1	1	0.5	mg/L	U	1		Chandler	2018
Premium Solvent	Nitrobenzene	180-77391-1	1	0.5	mg/L	U	1		Chester	2018
Premium Solvent	Nitrobenzene	180-82330-1	1	0.5	mg/L	U	1		Clackamas	2018
Premium Solvent	Nitrobenzene	180-77710-1	1	0.5	mg/L	U	1		Cohoes	2018
Premium Solvent	Nitrobenzene	180-81146-1	1	0.5	mg/L	U	1		Farmington	2018
Premium Solvent	Nitrobenzene	180-77381-1	1	0.5	mg/L	U	1		Kaukauna	2018
Premium Solvent	Nitrobenzene	180-77382-1	1	0.5	mg/L	U	1		Kaukauna	2018
Premium Solvent	Nitrobenzene	180-77383-1	1	0.5	mg/L	U	1		Kaukauna	2018
Premium Solvent	Nitrobenzene	180-77070-1	1	0.5	mg/L	U	1		Lackawanna	2018
Premium Solvent	Nitrobenzene	180-80014-1	1	0.5	mg/L	U	1		Oklahoma City	2018
Premium Solvent	Nitrobenzene	180-80848-1	1	0.5	mg/L	U	1		Sacramento	2018
Premium Solvent	Nitrobenzene	180-81823-1	1	0.5	mg/L	U *	1		Salisbury	2018
Premium Solvent	Nitrobenzene	180-76988-1	1	0.5	mg/L	U	1		Salt Lake City	2018
Premium Solvent	Nitrobenzene	180-78677-1	1	0.5	mg/L	U	1		Santa Ana	2018
Premium Solvent	Nitrobenzene	180-78463-1	1	0.5	mg/L	U	1		St Pauls	2018
Premium Solvent	Nitrobenzene	180-76683-1	1	0.5	mg/L	U	1		Syracuse	2018
Premium Solvent	Nitrobenzene	180-79370-1	1	0.5	mg/L	U	1		Tampa	2018
Premium Solvent	Nitrobenzene	180-78689-1	1	0.5	mg/L	U	1		Vinton	2018
Premium Solvent	Nitrobenzene	180-76265-1	1	0.5	mg/L	U	1		Waukesha	2018
Premium Solvent	Nitrobenzene	180-76266-1	1	0.5	mg/L	U	1		Waukesha	2018
Premium Solvent	Nitrobenzene	180-76267-1	1	0.5	mg/L	U	1		Waukesha	2018
Premium Solvent	Nitrobenzene	180-76262-1	1	0.5	mg/L	U	1		Wichita	2018
Premium Solvent	Nitrobenzene	180-72259-2	1	0.5	mg/L	U	1		Chester	2018

Premium Solvent	Nitrobenzene	180-72871-1	1	0.5	mg/L	U	1	Sacramento	2018
Premium Solvent	Nitrobenzene	180-71540-1	1	0.5	mg/L	U	1	Salisbury	2018
Premium Solvent	Nitrobenzene	180-71594-1	1	0.5	mg/L	U	1	Santa Ana	2018
Premium Solvent	Nitrobenzene	180-74277-1	1	0.5	mg/L	U	1	Tallahassee	2018
Premium Solvent	Nitrobenzene	180-80012-1	20	10	mg/L	U F1	20	Oklahoma City	2018
Premium Solvent	Pentachlorophenol	180-58744-1	0.13	0.065	mg/L	U	0.13	Albuquerque	2016
Premium Solvent	Pentachlorophenol	180-52527-1	0.13	0.065	mg/L	U	0.13	Boise	2016
Premium Solvent	Pentachlorophenol	180-53494-1	0.13	0.065	mg/L	U	0.13	Chandler	2016
Premium Solvent	Pentachlorophenol	180-58394-1	0.13	0.065	mg/L	U	0.13	Charlotte	2016
Premium Solvent	Pentachlorophenol	180-54771-1	0.13	0.065	mg/L	U	0.13	Chester	2016
Premium Solvent	Pentachlorophenol	180-58680-1	0.13	0.065	mg/L	U	0.13	Clackamas	2016
Premium Solvent	Pentachlorophenol	180-56685-1	0.13	0.065	mg/L	U	0.13	Farmington	2016
Premium Solvent	Pentachlorophenol	180-53961-1	0.13	0.065	mg/L	U	0.13	Kaukauna	2016
Premium Solvent	Pentachlorophenol	180-53962-1	0.13	0.065	mg/L	U	0.13	Kaukauna	2016
Premium Solvent	Pentachlorophenol	180-53963-1	0.13	0.065	mg/L	U	0.13	Kaukauna	2016
Premium Solvent	Pentachlorophenol	180-57964-1	0.13	0.065	mg/L	U	0.13	Omaha	2016
Premium Solvent	Pentachlorophenol	180-56003-1	0.13	0.065	mg/L	U	0.13	St. Pauls	2016
Premium Solvent	Pentachlorophenol	180-55533-1	0.13	0.065	mg/L	U	0.13	Syracuse	2016
Premium Solvent	Pentachlorophenol	180-58138-1	0.13	0.065	mg/L	U	0.13	Tampa	2016
Premium Solvent	Pentachlorophenol	180-58732-1	0.13	0.065	mg/L	U	0.13	Tulsa	2016
Premium Solvent	Pentachlorophenol	180-58266-1	0.13	0.065	mg/L	U	0.13	Vinton	2016
Premium Solvent	Pentachlorophenol	180-54672-1	0.13	0.065	mg/L	U	0.13	Waukesha	2016
Premium Solvent	Pentachlorophenol	180-54673-1	0.13	0.065	mg/L	U	0.13	Waukesha	2016
Premium Solvent	Pentachlorophenol	180-54674-1	0.13	0.065	mg/L	U	0.13	Waukesha	2016
Premium Solvent	Pentachlorophenol	180-54675-1	0.13	0.065	mg/L	U	0.13	Waukesha	2016
Premium Solvent	Pentachlorophenol	180-54676-1	0.13	0.065	mg/L	U	0.13	Waukesha	2016
Premium Solvent	Pentachlorophenol	180-54677-1	0.13	0.065	mg/L	U	0.13	Waukesha	2016
Premium Solvent	Pentachlorophenol	180-54678-1	0.13	0.065	mg/L	U	0.13	Waukesha	2016
Premium Solvent	Pentachlorophenol	180-54679-1	0.13	0.065	mg/L	U	0.13	Waukesha	2016
Premium Solvent	Pentachlorophenol	180-54680-1	0.13	0.065	mg/L	U	0.13	Waukesha	2016
Premium Solvent	Pentachlorophenol	180-66650-1	0.13	0.065	mg/L	U	0.13	Albuquerque	2017
Premium Solvent	Pentachlorophenol	180-65687-1	0.13	0.065	mg/L	U	0.13	Archdale	2017
Premium Solvent	Pentachlorophenol	180-65693-1	0.13	0.065	mg/L	U	0.13	Avon	2017
Premium Solvent	Pentachlorophenol	180-64613-1	0.13	0.065	mg/L	U	0.13	Chandler	2017

Premium Solvent	Pentachlorophenol	180-70321-1	0.13	0.065	mg/L	U	0.13		Chesapeake	2017
Premium Solvent	Pentachlorophenol	180-69209-1	0.13	0.065	mg/L	U	0.13		Clackamas	2017
Premium Solvent	Pentachlorophenol	180-65928-1	0.13	0.065	mg/L	U	0.13		Cohoes	2017
Premium Solvent	Pentachlorophenol	180-68416-1	0.13	0.065	mg/L	U	0.13		Farmington	2017
Premium Solvent	Pentachlorophenol	180-70383-1	0.13	0.065	mg/L	U	0.13		Grand Island	2017
Premium Solvent	Pentachlorophenol	180-64751-1	0.13	0.065	mg/L	U *	0.13		Kaukauna	2017
Premium Solvent	Pentachlorophenol	180-64752-1	0.13	0.065	mg/L	U *	0.13		Kaukauna	2017
Premium Solvent	Pentachlorophenol	180-64753-1	0.13	0.065	mg/L	U *	0.13		Kaukauna	2017
Premium Solvent	Pentachlorophenol	180-65696-1	0.13	0.065	mg/L	U	0.13		Lackawanna	2017
Premium Solvent	Pentachlorophenol	180-69242-1	0.13	0.065	mg/L	U	0.13		Oklahoma City	2017
Premium Solvent	Pentachlorophenol	180-69237-1	0.13	0.065	mg/L	U	0.13		Omaha	2017
Premium Solvent	Pentachlorophenol	180-70392-1	0.13	0.065	mg/L	U	0.13		Raleigh	2017
Premium Solvent	Pentachlorophenol	180-68772-1	0.13	0.065	mg/L	U	0.13		St Pauls	2017
Premium Solvent	Pentachlorophenol	180-65396-1	0.13	0.065	mg/L	U	0.13		Syracuse	2017
Premium Solvent	Pentachlorophenol	180-66253-1	0.13	0.065	mg/L	U	0.13		Vinton	2017
Premium Solvent	Pentachlorophenol	180-68919-1	0.13	0.065	mg/L	U	0.13		Waukesha	2017
Premium Solvent	Pentachlorophenol	180-68924-1	0.13	0.065	mg/L	U	0.13		Waukesha	2017
Premium Solvent	Pentachlorophenol	180-68925-1	0.13	0.065	mg/L	U	0.13		Waukesha	2017
Premium Solvent	Pentachlorophenol	180-64796-1	0.13	0.065	mg/L	U *	0.13		Wichita	2017
Premium Solvent	Pentachlorophenol	180-60141-1	0.13	0.065	mg/L	U	0.13		Avon	2017
Premium Solvent	Pentachlorophenol	180-60012-1	0.13	0.065	mg/L	U	0.13		Chesapeake	2017
Premium Solvent	Pentachlorophenol	180-59840-1	0.13	0.065	mg/L	U	0.13		Cohoes	2017
Premium Solvent	Pentachlorophenol	180-59969-1	0.13	0.065	mg/L	U	0.13	52	Lackawanna	2017
Premium Solvent	Pentachlorophenol	180-60895-1	0.13	0.065	mg/L	U	0.13		Archdale	2017
Premium Solvent	Pentachlorophenol	180-60618-1	0.13	0.065	mg/L	U	0.13		Barre	2017
Premium Solvent	Pentachlorophenol	180-81014-1	0.13	0.065	mg/L	U H	0.13		Albuquerque	2018
Premium Solvent	Pentachlorophenol	180-77400-1	0.13	0.065	mg/L	U	0.13		Archdale	2018
Premium Solvent	Pentachlorophenol	180-80742-1	0.13	0.065	mg/L	U	0.13		Avon	2018
Premium Solvent	Pentachlorophenol	180-81163-1	0.13	0.065	mg/L	U	0.13		Barre	2018
Premium Solvent	Pentachlorophenol	180-77125-1	0.13	0.065	mg/L	U	0.13		Boise	2018
Premium Solvent	Pentachlorophenol	180-77004-1	0.13	0.065	mg/L	U	0.13		Chandler	2018
Premium Solvent	Pentachlorophenol	180-77391-1	0.13	0.065	mg/L	U	0.13		Chester	2018
Premium Solvent	Pentachlorophenol	180-82330-1	0.13	0.065	mg/L	U	0.13		Clackamas	2018
Premium Solvent	Pentachlorophenol	180-77710-1	0.13	0.065	mg/L	U	0.13		Cohoes	2018

Premium Solvent	Pentachlorophenol	180-81146-1	0.13	0.065	mg/L	U	0.13	Farmington	2018
Premium Solvent	Pentachlorophenol	180-77381-1	0.13	0.065	mg/L	U	0.13	Kaukauna	2018
Premium Solvent	Pentachlorophenol	180-77382-1	0.13	0.065	mg/L	U	0.13	Kaukauna	2018
Premium Solvent	Pentachlorophenol	180-77383-1	0.13	0.065	mg/L	U	0.13	Kaukauna	2018
Premium Solvent	Pentachlorophenol	180-77070-1	0.13	0.065	mg/L	U	0.13	Lackawanna	2018
Premium Solvent	Pentachlorophenol	180-80014-1	0.13	0.065	mg/L	U	0.13	Oklahoma City	2018
Premium Solvent	Pentachlorophenol	180-80848-1	0.13	0.065	mg/L	U	0.13	Sacramento	2018
Premium Solvent	Pentachlorophenol	180-81823-1	0.13	0.065	mg/L	U	0.13	Salisbury	2018
Premium Solvent	Pentachlorophenol	180-76988-1	0.13	0.065	mg/L	U	0.13	Salt Lake City	2018
Premium Solvent	Pentachlorophenol	180-78677-1	0.13	0.065	mg/L	U	0.13	Santa Ana	2018
Premium Solvent	Pentachlorophenol	180-78463-1	0.13	0.065	mg/L	U	0.13	St Pauls	2018
Premium Solvent	Pentachlorophenol	180-76683-1	0.13	0.065	mg/L	U	0.13	Syracuse	2018
Premium Solvent	Pentachlorophenol	180-79370-1	0.13	0.065	mg/L	U	0.13	Tampa	2018
Premium Solvent	Pentachlorophenol	180-78689-1	0.13	0.065	mg/L	U	0.13	Vinton	2018
Premium Solvent	Pentachlorophenol	180-76265-1	0.13	0.065	mg/L	U	0.13	Waukesha	2018
Premium Solvent	Pentachlorophenol	180-76266-1	0.13	0.065	mg/L	U	0.13	Waukesha	2018
Premium Solvent	Pentachlorophenol	180-76267-1	0.13	0.065	mg/L	U	0.13	Waukesha	2018
Premium Solvent	Pentachlorophenol	180-76262-1	0.13	0.065	mg/L	U	0.13	Wichita	2018
Premium Solvent	Pentachlorophenol	180-72259-2	0.13	0.065	mg/L	U	0.13	Chester	2018
Premium Solvent	Pentachlorophenol	180-72871-1	0.13	0.065	mg/L	U	0.13	Sacramento	2018
Premium Solvent	Pentachlorophenol	180-71540-1	0.13	0.065	mg/L	U	0.13	Salisbury	2018
Premium Solvent	Pentachlorophenol	180-71594-1	0.13	0.065	mg/L	U	0.13	Santa Ana	2018
Premium Solvent	Pentachlorophenol	180-74277-1	0.13	0.065	mg/L	U	0.13	Tallahassee	2018
Premium Solvent	Pentachlorophenol	180-58611-1	0.18	0.09	mg/L	U	0.18	Sacremento	2016
Premium Solvent	Pentachlorophenol	180-80012-1	100	50	mg/L	U F1	100	Oklahoma City	2018
Premium Solvent	pH	180-80742-1	4.4	4.4	SU	HF	0.1	Avon	2018
Premium Solvent	pH	180-77391-1	4.6	4.6	SU	HF	0.1	Chester	2018
Premium Solvent	pH	180-72259-2	5	5	SU	HF	0.1	Chester	2018
Premium Solvent	pH	180-66253-1	5.2	5.2	SU	H	0.1	Vinton	2017
Premium Solvent	pH	180-78689-1	5.2	5.2	SU	HF	0.1	Vinton	2018
Premium Solvent	pH	180-71594-1	5.2	5.2	SU	H	0.1	Santa Ana	2018
Premium Solvent	pH	180-81823-1	5.4	5.4	SU	HF	0.1	Salisbury	2018
Premium Solvent	pH	180-56685-1	5.56	5.56	SU		0.1	Farmington	2016
Premium Solvent	pH	180-58138-1	5.7	5.7	SU	H	0.1	Tampa	2016

Premium Solvent	pH	180-59840-1	5.7	5.7	SU		0.1	Cohoes	2017
Premium Solvent	pH	180-65693-1	5.8	5.8	SU	H	0.1	Avon	2017
Premium Solvent	pH	180-59969-1	5.8	5.8	SU		0.1	Lackawanna	2017
Premium Solvent	pH	180-53494-1	5.86	5.86	SU		0.1	Chandler	2016
Premium Solvent	pH	180-58680-1	5.9	5.9	SU	H	0.1	Clackamas	2016
Premium Solvent	pH	180-65696-1	5.9	5.9	SU		0.1	Lackawanna	2017
Premium Solvent	pH	180-71540-1	5.9	5.9	SU	H	0.1	Salisbury	2018
Premium Solvent	pH	180-81163-1	6.1	6.1	SU	HF	0.1	Barre	2018
Premium Solvent	pH	180-60141-1	6.2	6.2	SU	H	0.1	Avon	2017
Premium Solvent	pH	180-78463-1	6.2	6.2	SU	HF	0.1	St Pauls	2018
Premium Solvent	pH	180-69237-1	6.3	6.3	SU	H	0.1	Omaha	2017
Premium Solvent	pH	180-54679-1	6.31	6.31	SU		0.1	Waukesha	2016
Premium Solvent	pH	180-54677-1	6.34	6.34	SU		0.1	Waukesha	2016
Premium Solvent	pH	180-54678-1	6.34	6.34	SU		0.1	Waukesha	2016
Premium Solvent	pH	180-60012-1	6.4	6.4	SU	H	0.1	Chesapeake	2017
Premium Solvent	pH	180-55533-1	6.43	6.43	SU		0.1	Syracuse	2016
Premium Solvent	pH	180-66650-1	6.5	6.5	SU	H	0.1	Albuquerque	2017
Premium Solvent	pH	180-65687-1	6.5	6.5	SU	H	0.1	Archdale	2017
Premium Solvent	pH	180-64613-1	6.5	6.5	SU		0.1	Chandler	2017
Premium Solvent	pH	180-70321-1	6.5	6.5	SU		0.1	Chesapeake	2017
Premium Solvent	pH	180-77710-1	6.5	6.5	SU	HF	0.1	Cohoes	2018
Premium Solvent	pH	180-54676-1	6.55	6.55	SU		0.1	Waukesha	2016
Premium Solvent	pH	180-54771-1	6.56	6.56	SU	H	0.1	Chester	2016
Premium Solvent	pH	180-56003-1	6.57	6.57	SU		0.1	St. Pauls	2016
Premium Solvent	pH	180-65928-1	6.6	6.6	SU		0.1	Cohoes	2017
Premium Solvent	pH	180-65396-1	6.6	6.6	SU	H	0.1	Syracuse	2017
Premium Solvent	pH	180-77070-1	6.6	6.6	SU	HF	0.1	Lackawanna	2018
Premium Solvent	pH	180-80848-1	6.6	6.6	SU	HF	0.1	Sacramento	2018
Premium Solvent	pH	180-78677-1	6.7	6.7	SU	HF	0.1	Santa Ana	2018
Premium Solvent	pH	180-76683-1	6.7	6.7	SU	HF	0.1	Syracuse	2018
Premium Solvent	pH	180-54674-1	6.76	6.76	SU		0.1	Waukesha	2016
Premium Solvent	pH	180-69209-1	6.8	6.8	SU	H	0.1	Clackamas	2017
Premium Solvent	pH	180-70392-1	6.8	6.8	SU	H	0.1	Raleigh	2017
Premium Solvent	pH	180-54675-1	6.83	6.83	SU		0.1	Waukesha	2016

Premium Solvent	pH	180-53962-1	6.89	6.89	SU		0.1		Kaukauna	2016
Premium Solvent	pH	180-69242-1	6.9	6.9	SU	H	0.1		Oklahoma City	2017
Premium Solvent	pH	180-81146-1	6.9	6.9	SU	HF	0.1		Farmington	2018
Premium Solvent	pH	180-74277-1	6.9	6.9	SU	HF	0.1		Tallahassee	2018
Premium Solvent	pH	180-64751-1	7	7	SU		0.1		Kaukauna	2017
Premium Solvent	pH	180-68919-1	7	7	SU	H	0.1		Waukesha	2017
Premium Solvent	pH	180-60895-1	7	7	SU	H	0.1		Archdale	2017
Premium Solvent	pH	180-76262-1	7	7	SU	HF	0.1		Wichita	2018
Premium Solvent	pH	180-76267-1	7.1	7.1	SU	HF	0.1	52	Waukesha	2018
Premium Solvent	pH	180-72871-1	7.1	7.1	SU	HF	0.1		Sacramento	2018
Premium Solvent	pH	180-58744-1	7.2	7.2	SU		0.1		Albuquerque	2016
Premium Solvent	pH	180-77383-1	7.2	7.2	SU	HF	0.1		Kaukauna	2018
Premium Solvent	pH	180-76265-1	7.2	7.2	SU	HF	0.1		Waukesha	2018
Premium Solvent	pH	180-68772-1	7.3	7.3	SU	H	0.1		St Pauls	2017
Premium Solvent	pH	180-76266-1	7.3	7.3	SU	HF	0.1		Waukesha	2018
Premium Solvent	pH	180-82330-1	7.4	7.4	SU	HF	0.1		Clackamas	2018
Premium Solvent	pH	180-77382-1	7.4	7.4	SU	HF	0.1		Kaukauna	2018
Premium Solvent	pH	180-58394-1	7.5	7.5	SU	H	0.1		Charlotte	2016
Premium Solvent	pH	180-58611-1	7.5	7.5	SU		0.1		Sacremento	2016
Premium Solvent	pH	180-80014-1	7.5	7.5	SU	HF	0.1		Oklahoma City	2018
Premium Solvent	pH	180-54673-1	7.53	7.53	SU		0.1		Waukesha	2016
Premium Solvent	pH	180-54680-1	7.56	7.56	SU		0.1		Waukesha	2016
Premium Solvent	pH	180-81014-1	7.6	7.6	SU	HF	0.1		Albuquerque	2018
Premium Solvent	pH	180-76988-1	7.6	7.6	SU	HF	0.1		Salt Lake City	2018
Premium Solvent	pH	180-52527-1	7.69	7.69	SU	H	0.1		Boise	2016
Premium Solvent	pH	180-57964-1	7.7	7.7	SU		0.1		Omaha	2016
Premium Solvent	pH	180-68924-1	7.7	7.7	SU	H	0.1		Waukesha	2017
Premium Solvent	pH	180-64796-1	7.7	7.7	SU	H	0.1		Wichita	2017
Premium Solvent	pH	180-60618-1	7.7	7.7	SU	H	0.1		Barre	2017
Premium Solvent	pH	180-77381-1	7.7	7.7	SU	HF	0.1		Kaukauna	2018
Premium Solvent	pH	180-53961-1	7.78	7.78	SU		0.1		Kaukauna	2016
Premium Solvent	pH	180-58732-1	7.8	7.8	SU	H	0.1		Tulsa	2016
Premium Solvent	pH	180-77125-1	7.8	7.8	SU	HF	0.1		Boise	2018
Premium Solvent	pH	180-53963-1	7.82	7.82	SU		0.1		Kaukauna	2016

Premium Solvent	pH	180-54672-1	7.9	7.9	SU		0.1	Waukesha	2016
Premium Solvent	pH	180-70383-1	7.9	7.9	SU		0.1	Grand Island	2017
Premium Solvent	pH	180-77400-1	8.5	8.5	SU	HF	0.1	Archdale	2018
Premium Solvent	pH	180-68416-1	8.6	8.6	SU		0.1	Farmington	2017
Premium Solvent	pH	180-80012-1	8.6	8.6	SU	HF	0.1	Oklahoma City	2018
Premium Solvent	pH	180-64753-1	8.7	8.7	SU		0.1	Kaukauna	2017
Premium Solvent	pH	180-77004-1	8.7	8.7	SU	HF	0.1	Chandler	2018
Premium Solvent	pH	180-58266-1	8.8	8.8	SU	H	0.1	Vinton	2016
Premium Solvent	pH	180-68925-1	9.1	9.1	SU	H	0.1	Waukesha	2017
Premium Solvent	pH	180-79370-1	9.5	9.5	SU	HF	0.1	Tampa	2018
Premium Solvent	pH	180-64752-1	10	10	SU		0.1	Kaukauna	2017
Premium Solvent	Pyridine	180-58611-1	0.58	0.29	mg/L	U	0.58	Sacremento	2016
Premium Solvent	Pyridine	180-58744-1	5	2.5	mg/L	U	5	Albuquerque	2016
Premium Solvent	Pyridine	180-52527-1	5	2.5	mg/L	U	5	Boise	2016
Premium Solvent	Pyridine	180-53494-1	5	2.5	mg/L	U	5	Chandler	2016
Premium Solvent	Pyridine	180-58394-1	5	2.5	mg/L	U	5	Charlotte	2016
Premium Solvent	Pyridine	180-54771-1	5	2.5	mg/L	U	5	Chester	2016
Premium Solvent	Pyridine	180-58680-1	5	2.5	mg/L	U	5	Clackamas	2016
Premium Solvent	Pyridine	180-56685-1	5	2.5	mg/L	U	5	Farmington	2016
Premium Solvent	Pyridine	180-53961-1	5	2.5	mg/L	U	5	Kaukauna	2016
Premium Solvent	Pyridine	180-53962-1	5	2.5	mg/L	U	5	Kaukauna	2016
Premium Solvent	Pyridine	180-53963-1	5	2.5	mg/L	U	5	Kaukauna	2016
Premium Solvent	Pyridine	180-57964-1	5	2.5	mg/L	U	5	Omaha	2016
Premium Solvent	Pyridine	180-56003-1	5	2.5	mg/L	U	5	St. Pauls	2016
Premium Solvent	Pyridine	180-55533-1	5	2.5	mg/L	U	5	Syracuse	2016
Premium Solvent	Pyridine	180-58138-1	5	2.5	mg/L	U	5	Tampa	2016
Premium Solvent	Pyridine	180-58732-1	5	2.5	mg/L	U	5	Tulsa	2016
Premium Solvent	Pyridine	180-58266-1	5	2.5	mg/L	U	5	Vinton	2016
Premium Solvent	Pyridine	180-54672-1	5	2.5	mg/L	U	5	Waukesha	2016
Premium Solvent	Pyridine	180-54673-1	5	2.5	mg/L	U	5	Waukesha	2016
Premium Solvent	Pyridine	180-54674-1	5	2.5	mg/L	U	5	Waukesha	2016
Premium Solvent	Pyridine	180-54675-1	5	2.5	mg/L	U	5	Waukesha	2016
Premium Solvent	Pyridine	180-54676-1	5	2.5	mg/L	U	5	Waukesha	2016
Premium Solvent	Pyridine	180-54677-1	5	2.5	mg/L	U	5	Waukesha	2016

Premium Solvent	Pyridine	180-54678-1	5	2.5	mg/L	U	5		Waukesha	2016
Premium Solvent	Pyridine	180-54679-1	5	2.5	mg/L	U	5		Waukesha	2016
Premium Solvent	Pyridine	180-54680-1	5	2.5	mg/L	U	5		Waukesha	2016
Premium Solvent	Pyridine	180-66650-1	5	2.5	mg/L	U	5		Albuquerque	2017
Premium Solvent	Pyridine	180-65687-1	5	2.5	mg/L	U	5		Archdale	2017
Premium Solvent	Pyridine	180-65693-1	5	2.5	mg/L	U	5		Avon	2017
Premium Solvent	Pyridine	180-64613-1	5	2.5	mg/L	U	5		Chandler	2017
Premium Solvent	Pyridine	180-70321-1	5	2.5	mg/L	U	5		Chesapeake	2017
Premium Solvent	Pyridine	180-69209-1	5	2.5	mg/L	U	5		Clackamas	2017
Premium Solvent	Pyridine	180-65928-1	5	2.5	mg/L	U	5		Cohoes	2017
Premium Solvent	Pyridine	180-68416-1	5	2.5	mg/L	U	5		Farmington	2017
Premium Solvent	Pyridine	180-70383-1	5	2.5	mg/L	U	5		Grand Island	2017
Premium Solvent	Pyridine	180-64751-1	5	2.5	mg/L	U	5		Kaukauna	2017
Premium Solvent	Pyridine	180-64752-1	5	2.5	mg/L	U	5		Kaukauna	2017
Premium Solvent	Pyridine	180-64753-1	5	2.5	mg/L	U	5		Kaukauna	2017
Premium Solvent	Pyridine	180-65696-1	5	2.5	mg/L	U	5		Lackawanna	2017
Premium Solvent	Pyridine	180-69242-1	5	2.5	mg/L	U	5		Oklahoma City	2017
Premium Solvent	Pyridine	180-69237-1	5	2.5	mg/L	U	5		Omaha	2017
Premium Solvent	Pyridine	180-70392-1	5	2.5	mg/L	U	5		Raleigh	2017
Premium Solvent	Pyridine	180-68772-1	5	2.5	mg/L	U	5		St Pauls	2017
Premium Solvent	Pyridine	180-65396-1	5	2.5	mg/L	U	5		Syracuse	2017
Premium Solvent	Pyridine	180-66253-1	5	2.5	mg/L	U	5		Vinton	2017
Premium Solvent	Pyridine	180-68919-1	5	2.5	mg/L	U	5		Waukesha	2017
Premium Solvent	Pyridine	180-68924-1	5	2.5	mg/L	U	5		Waukesha	2017
Premium Solvent	Pyridine	180-68925-1	5	2.5	mg/L	U	5		Waukesha	2017
Premium Solvent	Pyridine	180-64796-1	5	2.5	mg/L	U	5		Wichita	2017
Premium Solvent	Pyridine	180-60141-1	5	2.5	mg/L	U	5		Avon	2017
Premium Solvent	Pyridine	180-60012-1	5	2.5	mg/L	U	5		Chesapeake	2017
Premium Solvent	Pyridine	180-59840-1	5	2.5	mg/L	U	5	52	Cohoes	2017
Premium Solvent	Pyridine	180-59969-1	5	2.5	mg/L	U	5		Lackawanna	2017
Premium Solvent	Pyridine	180-60895-1	5	2.5	mg/L	U	5		Archdale	2017
Premium Solvent	Pyridine	180-60618-1	5	2.5	mg/L	U	5		Barre	2017
Premium Solvent	Pyridine	180-81014-1	5	2.5	mg/L	U H	5		Albuquerque	2018
Premium Solvent	Pyridine	180-77400-1	5	2.5	mg/L	U	5		Archdale	2018

Premium Solvent	Pyridine	180-80742-1	5	2.5	mg/L	U	5	Avon	2018
Premium Solvent	Pyridine	180-81163-1	5	2.5	mg/L	U	5	Barre	2018
Premium Solvent	Pyridine	180-77125-1	5	2.5	mg/L	U	5	Boise	2018
Premium Solvent	Pyridine	180-77004-1	5	2.5	mg/L	U	5	Chandler	2018
Premium Solvent	Pyridine	180-77391-1	5	2.5	mg/L	U	5	Chester	2018
Premium Solvent	Pyridine	180-82330-1	5	2.5	mg/L	U	5	Clackamas	2018
Premium Solvent	Pyridine	180-77710-1	5	2.5	mg/L	U	5	Cohoes	2018
Premium Solvent	Pyridine	180-81146-1	5	2.5	mg/L	U	5	Farmington	2018
Premium Solvent	Pyridine	180-77381-1	5	2.5	mg/L	U	5	Kaukauna	2018
Premium Solvent	Pyridine	180-77382-1	5	2.5	mg/L	U	5	Kaukauna	2018
Premium Solvent	Pyridine	180-77383-1	5	2.5	mg/L	U	5	Kaukauna	2018
Premium Solvent	Pyridine	180-77070-1	5	2.5	mg/L	U	5	Lackawanna	2018
Premium Solvent	Pyridine	180-80014-1	5	2.5	mg/L	U	5	Oklahoma City	2018
Premium Solvent	Pyridine	180-80848-1	5	2.5	mg/L	U	5	Sacramento	2018
Premium Solvent	Pyridine	180-81823-1	5	2.5	mg/L	U	5	Salisbury	2018
Premium Solvent	Pyridine	180-76988-1	5	2.5	mg/L	U	5	Salt Lake City	2018
Premium Solvent	Pyridine	180-78677-1	5	2.5	mg/L	U	5	Santa Ana	2018
Premium Solvent	Pyridine	180-78463-1	5	2.5	mg/L	U	5	St Pauls	2018
Premium Solvent	Pyridine	180-76683-1	5	2.5	mg/L	U	5	Syracuse	2018
Premium Solvent	Pyridine	180-79370-1	5	2.5	mg/L	U	5	Tampa	2018
Premium Solvent	Pyridine	180-78689-1	5	2.5	mg/L	U	5	Vinton	2018
Premium Solvent	Pyridine	180-76265-1	5	2.5	mg/L	U	5	Waukesha	2018
Premium Solvent	Pyridine	180-76266-1	5	2.5	mg/L	U	5	Waukesha	2018
Premium Solvent	Pyridine	180-76267-1	5	2.5	mg/L	U	5	Waukesha	2018
Premium Solvent	Pyridine	180-76262-1	5	2.5	mg/L	U	5	Wichita	2018
Premium Solvent	Pyridine	180-72259-2	5	2.5	mg/L	U	5	Chester	2018
Premium Solvent	Pyridine	180-72871-1	5	2.5	mg/L	U	5	Sacramento	2018
Premium Solvent	Pyridine	180-71540-1	5	2.5	mg/L	U	5	Salisbury	2018
Premium Solvent	Pyridine	180-71594-1	5	2.5	mg/L	U	5	Santa Ana	2018
Premium Solvent	Pyridine	180-74277-1	5	2.5	mg/L	U	5	Tallahassee	2018
Premium Solvent	Pyridine	180-80012-1	100	50	mg/L	U	100	Oklahoma City	2018
Premium Solvent	Selenium	180-54672-1	0.25	0.25	mg/L	J	1	Waukesha	2016
Premium Solvent	Selenium	180-54680-1	0.25	0.25	mg/L	J	1	Waukesha	2016
Premium Solvent	Selenium	180-53962-1	0.28	0.28	mg/L	J	1	Kaukauna	2016

Premium Solvent	Selenium	180-53961-1	0.39	0.39	mg/L	J	1	Kaukauna	2016
Premium Solvent	Selenium	180-68772-1	0.41	0.41	mg/L	J	1	St Pauls	2017
Premium Solvent	Selenium	180-68924-1	0.42	0.42	mg/L	J	1	Waukesha	2017
Premium Solvent	Selenium	180-53963-1	0.46	0.46	mg/L	J	1	Kaukauna	2016
Premium Solvent	Selenium	180-58744-1	1	0.5	mg/L	U	1	Albuquerque	2016
Premium Solvent	Selenium	180-53494-1	1	0.5	mg/L	U	1	Chandler	2016
Premium Solvent	Selenium	180-58394-1	1	0.5	mg/L	U	1	Charlotte	2016
Premium Solvent	Selenium	180-54771-1	1	0.5	mg/L	U	1	Chester	2016
Premium Solvent	Selenium	180-58680-1	1	0.5	mg/L	U	1	Clackamas	2016
Premium Solvent	Selenium	180-56685-1	1	0.5	mg/L	U	1	Farmington	2016
Premium Solvent	Selenium	180-57964-1	1	0.5	mg/L	U	1	Omaha	2016
Premium Solvent	Selenium	180-56003-1	1	0.5	mg/L	U	1	St. Pauls	2016
Premium Solvent	Selenium	180-55533-1	1	0.5	mg/L	U	1	Syracuse	2016
Premium Solvent	Selenium	180-58138-1	1	0.5	mg/L	U	1	Tampa	2016
Premium Solvent	Selenium	180-58732-1	1	0.5	mg/L	U	1	Tulsa	2016
Premium Solvent	Selenium	180-58266-1	1	0.5	mg/L	U	1	Vinton	2016
Premium Solvent	Selenium	180-54673-1	1	0.5	mg/L	U	1	Waukesha	2016
Premium Solvent	Selenium	180-54674-1	1	0.5	mg/L	U	1	Waukesha	2016
Premium Solvent	Selenium	180-54675-1	1	0.5	mg/L	U	1	Waukesha	2016
Premium Solvent	Selenium	180-54676-1	1	0.5	mg/L	U	1	Waukesha	2016
Premium Solvent	Selenium	180-54677-1	1	0.5	mg/L	U	1	Waukesha	2016
Premium Solvent	Selenium	180-54678-1	1	0.5	mg/L	U	1	Waukesha	2016
Premium Solvent	Selenium	180-54679-1	1	0.5	mg/L	U	1	Waukesha	2016
Premium Solvent	Selenium	180-66650-1	1	0.5	mg/L	U	1	Albuquerque	2017
Premium Solvent	Selenium	180-65687-1	1	0.5	mg/L	U	1	Archdale	2017
Premium Solvent	Selenium	180-65693-1	1	0.5	mg/L	U	1	Avon	2017
Premium Solvent	Selenium	180-64613-1	1	0.5	mg/L	U	1	Chandler	2017
Premium Solvent	Selenium	180-70321-1	1	0.5	mg/L	U	1	Chesapeake	2017
Premium Solvent	Selenium	180-69209-1	1	0.5	mg/L	U	1	Clackamas	2017
Premium Solvent	Selenium	180-65928-1	1	0.5	mg/L	U	1	Cohoes	2017
Premium Solvent	Selenium	180-68416-1	1	0.5	mg/L	U	1	Farmington	2017
Premium Solvent	Selenium	180-70383-1	1	0.5	mg/L	U	1	Grand Island	2017
Premium Solvent	Selenium	180-64751-1	1	0.5	mg/L	U	1	Kaukauna	2017
Premium Solvent	Selenium	180-64752-1	1	0.5	mg/L	U	1	Kaukauna	2017

Premium Solvent	Selenium	180-65696-1	1	0.5	mg/L	U	1		Lackawanna	2017
Premium Solvent	Selenium	180-69242-1	1	0.5	mg/L	U	1		Oklahoma City	2017
Premium Solvent	Selenium	180-69237-1	1	0.5	mg/L	U	1		Omaha	2017
Premium Solvent	Selenium	180-70392-1	1	0.5	mg/L	U	1		Raleigh	2017
Premium Solvent	Selenium	180-65396-1	1	0.5	mg/L	U	1		Syracuse	2017
Premium Solvent	Selenium	180-66253-1	1	0.5	mg/L	U	1		Vinton	2017
Premium Solvent	Selenium	180-68919-1	1	0.5	mg/L	U	1		Waukesha	2017
Premium Solvent	Selenium	180-68925-1	1	0.5	mg/L	U	1		Waukesha	2017
Premium Solvent	Selenium	180-60141-1	1	0.5	mg/L	U	1		Avon	2017
Premium Solvent	Selenium	180-60012-1	1	0.5	mg/L	U	1		Chesapeake	2017
Premium Solvent	Selenium	180-59840-1	1	0.5	mg/L	U	1		Cohoes	2017
Premium Solvent	Selenium	180-59969-1	1	0.5	mg/L	U	1		Lackawanna	2017
Premium Solvent	Selenium	180-60895-1	1	0.5	mg/L	U	1		Archdale	2017
Premium Solvent	Selenium	180-60618-1	1	0.5	mg/L	U	1		Barre	2017
Premium Solvent	Selenium	180-81014-1	1	0.5	mg/L	U	1	52	Albuquerque	2018
Premium Solvent	Selenium	180-77400-1	1	0.5	mg/L	U	1		Archdale	2018
Premium Solvent	Selenium	180-80742-1	1	0.5	mg/L	U	1		Avon	2018
Premium Solvent	Selenium	180-81163-1	1	0.5	mg/L	U	1		Barre	2018
Premium Solvent	Selenium	180-77125-1	1	0.5	mg/L	U	1		Boise	2018
Premium Solvent	Selenium	180-77004-1	1	0.5	mg/L	U	1		Chandler	2018
Premium Solvent	Selenium	180-77391-1	1	0.5	mg/L	U	1		Chester	2018
Premium Solvent	Selenium	180-82330-1	1	0.5	mg/L	U	1		Clackamas	2018
Premium Solvent	Selenium	180-77710-1	1	0.5	mg/L	U	1		Cohoes	2018
Premium Solvent	Selenium	180-81146-1	1	0.5	mg/L	U	1		Farmington	2018
Premium Solvent	Selenium	180-77381-1	1	0.5	mg/L	U	1		Kaukauna	2018
Premium Solvent	Selenium	180-77382-1	1	0.5	mg/L	U	1		Kaukauna	2018
Premium Solvent	Selenium	180-77383-1	1	0.5	mg/L	U	1		Kaukauna	2018
Premium Solvent	Selenium	180-77070-1	1	0.5	mg/L	U	1		Lackawanna	2018
Premium Solvent	Selenium	180-80012-1	1	0.5	mg/L	U	1		Oklahoma City	2018
Premium Solvent	Selenium	180-80014-1	1	0.5	mg/L	U	1		Oklahoma City	2018
Premium Solvent	Selenium	180-80848-1	1	0.5	mg/L	U	1		Sacramento	2018
Premium Solvent	Selenium	180-81823-1	1	0.5	mg/L	U	1		Salisbury	2018
Premium Solvent	Selenium	180-76988-1	1	0.5	mg/L	U	1		Salt Lake City	2018
Premium Solvent	Selenium	180-78677-1	1	0.5	mg/L	U	1		Santa Ana	2018

Premium Solvent	Selenium	180-78463-1	1	0.5	mg/L	U	1	St Pauls	2018
Premium Solvent	Selenium	180-76683-1	1	0.5	mg/L	U	1	Syracuse	2018
Premium Solvent	Selenium	180-79370-1	1	0.5	mg/L	U	1	Tampa	2018
Premium Solvent	Selenium	180-78689-1	1	0.5	mg/L	U	1	Vinton	2018
Premium Solvent	Selenium	180-76265-1	1	0.5	mg/L	U	1	Waukesha	2018
Premium Solvent	Selenium	180-76266-1	1	0.5	mg/L	U	1	Waukesha	2018
Premium Solvent	Selenium	180-76267-1	1	0.5	mg/L	U	1	Waukesha	2018
Premium Solvent	Selenium	180-76262-1	1	0.5	mg/L	U	1	Wichita	2018
Premium Solvent	Selenium	180-72259-2	1	0.5	mg/L	U	1	Chester	2018
Premium Solvent	Selenium	180-72871-1	1	0.5	mg/L	U	1	Sacramento	2018
Premium Solvent	Selenium	180-71540-1	1	0.5	mg/L	U	1	Salisbury	2018
Premium Solvent	Selenium	180-71594-1	1	0.5	mg/L	U	1	Santa Ana	2018
Premium Solvent	Selenium	180-74277-1	1	0.5	mg/L	U	1	Tallahassee	2018
Premium Solvent	Selenium	180-64753-1	0.52	0.52	mg/L	J	1	Kaukauna	2017
Premium Solvent	Selenium	180-52527-1	0.55	0.55	mg/L	J B	1	Boise	2016
Premium Solvent	Selenium	180-64796-1	0.57	0.57	mg/L	J	1	Wichita	2017
Premium Solvent	Selenium	180-58611-1	0.67	0.67	mg/L		0.58	Sacremento	2016
Premium Solvent	Silver	180-54680-1	0.083	0.083	mg/L	J	0.5	Waukesha	2016
Premium Solvent	Silver	180-58611-1	0.29	0.145	mg/L	U	0.29	Sacremento	2016
Premium Solvent	Silver	180-68925-1	0.15	0.15	mg/L	J	0.5	Waukesha	2017
Premium Solvent	Silver	180-54675-1	0.17	0.17	mg/L	J	0.5	Waukesha	2016
Premium Solvent	Silver	180-58744-1	0.5	0.25	mg/L	U	0.5	Albuquerque	2016
Premium Solvent	Silver	180-52527-1	0.5	0.25	mg/L	U	0.5	Boise	2016
Premium Solvent	Silver	180-53494-1	0.5	0.25	mg/L	U	0.5	Chandler	2016
Premium Solvent	Silver	180-58394-1	0.5	0.25	mg/L	U	0.5	Charlotte	2016
Premium Solvent	Silver	180-54771-1	0.5	0.25	mg/L	U	0.5	Chester	2016
Premium Solvent	Silver	180-58680-1	0.5	0.25	mg/L	U	0.5	Clackamas	2016
Premium Solvent	Silver	180-56685-1	0.5	0.25	mg/L	U	0.5	Farmington	2016
Premium Solvent	Silver	180-53961-1	0.5	0.25	mg/L	U	0.5	Kaukauna	2016
Premium Solvent	Silver	180-53962-1	0.5	0.25	mg/L	U	0.5	Kaukauna	2016
Premium Solvent	Silver	180-53963-1	0.5	0.25	mg/L	U	0.5	Kaukauna	2016
Premium Solvent	Silver	180-57964-1	0.5	0.25	mg/L	U	0.5	Omaha	2016
Premium Solvent	Silver	180-56003-1	0.5	0.25	mg/L	U	0.5	St. Pauls	2016
Premium Solvent	Silver	180-55533-1	0.5	0.25	mg/L	U	0.5	Syracuse	2016

Premium Solvent	Silver	180-58138-1	0.5	0.25	mg/L	U	0.5	Tampa	2016
Premium Solvent	Silver	180-58732-1	0.5	0.25	mg/L	U	0.5	Tulsa	2016
Premium Solvent	Silver	180-58266-1	0.5	0.25	mg/L	U	0.5	Vinton	2016
Premium Solvent	Silver	180-54672-1	0.5	0.25	mg/L	U	0.5	Waukesha	2016
Premium Solvent	Silver	180-54673-1	0.5	0.25	mg/L	U	0.5	Waukesha	2016
Premium Solvent	Silver	180-54674-1	0.5	0.25	mg/L	U	0.5	Waukesha	2016
Premium Solvent	Silver	180-54676-1	0.5	0.25	mg/L	U	0.5	Waukesha	2016
Premium Solvent	Silver	180-54677-1	0.5	0.25	mg/L	U	0.5	Waukesha	2016
Premium Solvent	Silver	180-54678-1	0.5	0.25	mg/L	U	0.5	Waukesha	2016
Premium Solvent	Silver	180-54679-1	0.5	0.25	mg/L	U	0.5	Waukesha	2016
Premium Solvent	Silver	180-66650-1	0.5	0.25	mg/L	U	0.5	Albuquerque	2017
Premium Solvent	Silver	180-65687-1	0.5	0.25	mg/L	U	0.5	Archdale	2017
Premium Solvent	Silver	180-65693-1	0.5	0.25	mg/L	U	0.5	Avon	2017
Premium Solvent	Silver	180-64613-1	0.5	0.25	mg/L	U	0.5	Chandler	2017
Premium Solvent	Silver	180-70321-1	0.5	0.25	mg/L	U	0.5	Chesapeake	2017
Premium Solvent	Silver	180-69209-1	0.5	0.25	mg/L	U	0.5	Clackamas	2017
Premium Solvent	Silver	180-65928-1	0.5	0.25	mg/L	U	0.5	Cohoes	2017
Premium Solvent	Silver	180-68416-1	0.5	0.25	mg/L	U	0.5	Farmington	2017
Premium Solvent	Silver	180-70383-1	0.5	0.25	mg/L	U	0.5	Grand Island	2017
Premium Solvent	Silver	180-64751-1	0.5	0.25	mg/L	U	0.5	Kaukauna	2017
Premium Solvent	Silver	180-64752-1	0.5	0.25	mg/L	U	0.5	Kaukauna	2017
Premium Solvent	Silver	180-64753-1	0.5	0.25	mg/L	U	0.5	Kaukauna	2017
Premium Solvent	Silver	180-65696-1	0.5	0.25	mg/L	U	0.5	Lackawanna	2017
Premium Solvent	Silver	180-69242-1	0.5	0.25	mg/L	U	0.5	Oklahoma City	2017
Premium Solvent	Silver	180-69237-1	0.5	0.25	mg/L	U	0.5	Omaha	2017
Premium Solvent	Silver	180-70392-1	0.5	0.25	mg/L	U	0.5	Raleigh	2017
Premium Solvent	Silver	180-68772-1	0.5	0.25	mg/L	U	0.5	St Pauls	2017
Premium Solvent	Silver	180-65396-1	0.5	0.25	mg/L	U	0.5	Syracuse	2017
Premium Solvent	Silver	180-66253-1	0.5	0.25	mg/L	U	0.5	Vinton	2017
Premium Solvent	Silver	180-68919-1	0.5	0.25	mg/L	U	0.5	Waukesha	2017
Premium Solvent	Silver	180-68924-1	0.5	0.25	mg/L	U	0.5	Waukesha	2017
Premium Solvent	Silver	180-64796-1	0.5	0.25	mg/L	U	0.5	Wichita	2017
Premium Solvent	Silver	180-60141-1	0.5	0.25	mg/L	U	0.5	Avon	2017
Premium Solvent	Silver	180-60012-1	0.5	0.25	mg/L	U	0.5	Chesapeake	2017

Premium Solvent	Silver	180-59840-1	0.5	0.25	mg/L	U	0.5	52	Cohoes	2017
Premium Solvent	Silver	180-59969-1	0.5	0.25	mg/L	U	0.5		Lackawanna	2017
Premium Solvent	Silver	180-60895-1	0.5	0.25	mg/L	U	0.5		Archdale	2017
Premium Solvent	Silver	180-60618-1	0.5	0.25	mg/L	U	0.5		Barre	2017
Premium Solvent	Silver	180-81014-1	0.5	0.25	mg/L	U	0.5		Albuquerque	2018
Premium Solvent	Silver	180-77400-1	0.5	0.25	mg/L	U	0.5		Archdale	2018
Premium Solvent	Silver	180-80742-1	0.5	0.25	mg/L	U	0.5		Avon	2018
Premium Solvent	Silver	180-81163-1	0.5	0.25	mg/L	U	0.5		Barre	2018
Premium Solvent	Silver	180-77125-1	0.5	0.25	mg/L	U	0.5		Boise	2018
Premium Solvent	Silver	180-77004-1	0.5	0.25	mg/L	U	0.5		Chandler	2018
Premium Solvent	Silver	180-77391-1	0.5	0.25	mg/L	U	0.5		Chester	2018
Premium Solvent	Silver	180-82330-1	0.5	0.25	mg/L	U	0.5		Clackamas	2018
Premium Solvent	Silver	180-77710-1	0.5	0.25	mg/L	U	0.5		Cohoes	2018
Premium Solvent	Silver	180-81146-1	0.5	0.25	mg/L	U	0.5		Farmington	2018
Premium Solvent	Silver	180-77381-1	0.5	0.25	mg/L	U	0.5		Kaukauna	2018
Premium Solvent	Silver	180-77382-1	0.5	0.25	mg/L	U	0.5		Kaukauna	2018
Premium Solvent	Silver	180-77383-1	0.5	0.25	mg/L	U	0.5		Kaukauna	2018
Premium Solvent	Silver	180-77070-1	0.5	0.25	mg/L	U	0.5		Lackawanna	2018
Premium Solvent	Silver	180-80012-1	0.5	0.25	mg/L	U	0.5		Oklahoma City	2018
Premium Solvent	Silver	180-80014-1	0.5	0.25	mg/L	U	0.5		Oklahoma City	2018
Premium Solvent	Silver	180-80848-1	0.5	0.25	mg/L	U	0.5		Sacramento	2018
Premium Solvent	Silver	180-81823-1	0.5	0.25	mg/L	U	0.5		Salisbury	2018
Premium Solvent	Silver	180-76988-1	0.5	0.25	mg/L	U	0.5		Salt Lake City	2018
Premium Solvent	Silver	180-78677-1	0.5	0.25	mg/L	U	0.5		Santa Ana	2018
Premium Solvent	Silver	180-78463-1	0.5	0.25	mg/L	U	0.5		St Pauls	2018
Premium Solvent	Silver	180-76683-1	0.5	0.25	mg/L	U	0.5		Syracuse	2018
Premium Solvent	Silver	180-79370-1	0.5	0.25	mg/L	U	0.5		Tampa	2018
Premium Solvent	Silver	180-78689-1	0.5	0.25	mg/L	U	0.5		Vinton	2018
Premium Solvent	Silver	180-76265-1	0.5	0.25	mg/L	U	0.5		Waukesha	2018
Premium Solvent	Silver	180-76266-1	0.5	0.25	mg/L	U	0.5		Waukesha	2018
Premium Solvent	Silver	180-76267-1	0.5	0.25	mg/L	U	0.5		Waukesha	2018
Premium Solvent	Silver	180-76262-1	0.5	0.25	mg/L	U	0.5		Wichita	2018
Premium Solvent	Silver	180-72259-2	0.5	0.25	mg/L	U	0.5		Chester	2018
Premium Solvent	Silver	180-72871-1	0.5	0.25	mg/L	U	0.5		Sacramento	2018

Premium Solvent	Silver	180-71540-1	0.5	0.25	mg/L	U	0.5	Salisbury	2018
Premium Solvent	Silver	180-71594-1	0.5	0.25	mg/L	U	0.5	Santa Ana	2018
Premium Solvent	Silver	180-74277-1	0.5	0.25	mg/L	U	0.5	Tallahassee	2018
Premium Solvent	Specific Gravity	180-77391-1	0.74	0.74	No Unit		0.01	Chester	2018
Premium Solvent	Specific Gravity	180-77381-1	0.74	0.74	No Unit		0.01	Kaukauna	2018
Premium Solvent	Specific Gravity	180-77004-1	0.75	0.75	No Unit		0.01	Chandler	2018
Premium Solvent	Specific Gravity	180-77400-1	0.76	0.76	No Unit		0.01	Archdale	2018
Premium Solvent	Specific Gravity	180-77125-1	0.76	0.76	No Unit		0.01	Boise	2018
Premium Solvent	Specific Gravity	180-82330-1	0.76	0.76	No Unit		0.01	Clackamas	2018
Premium Solvent	Specific Gravity	180-77710-1	0.76	0.76	No Unit		0.01	Cohoes	2018
Premium Solvent	Specific Gravity	180-77382-1	0.76	0.76	No Unit		0.01	Kaukauna	2018
Premium Solvent	Specific Gravity	180-77383-1	0.76	0.76	No Unit		0.01	Kaukauna	2018
Premium Solvent	Specific Gravity	180-77070-1	0.76	0.76	No Unit		0.01	Lackawanna	2018
Premium Solvent	Specific Gravity	180-80012-1	0.76	0.76	No Unit		0.01	Oklahoma City	2018
Premium Solvent	Specific Gravity	180-76988-1	0.76	0.76	No Unit		0.01	Salt Lake City	2018
Premium Solvent	Specific Gravity	180-78677-1	0.76	0.76	No Unit		0.01	Santa Ana	2018
Premium Solvent	Specific Gravity	180-78463-1	0.76	0.76	No Unit		0.01	St Pauls	2018
Premium Solvent	Specific Gravity	180-76683-1	0.76	0.76	No Unit		0.01	Syracuse	2018
Premium Solvent	Specific Gravity	180-78689-1	0.76	0.76	No Unit		0.01	Vinton	2018
Premium Solvent	Specific Gravity	180-76265-1	0.76	0.76	No Unit		0.01	Waukesha	2018
Premium Solvent	Specific Gravity	180-76266-1	0.76	0.76	No Unit		0.01	Waukesha	2018
Premium Solvent	Specific Gravity	180-76262-1	0.76	0.76	No Unit		0.01	Wichita	2018
Premium Solvent	Specific Gravity	180-71540-1	0.76	0.76	No Unit		0.01	Salisbury	2018
Premium Solvent	Specific Gravity	180-81014-1	0.77	0.77	No Unit		0.01	Albuquerque	2018
Premium Solvent	Specific Gravity	180-80742-1	0.77	0.77	No Unit		0.01	Avon	2018
Premium Solvent	Specific Gravity	180-80014-1	0.77	0.77	No Unit		0.01	Oklahoma City	2018
Premium Solvent	Specific Gravity	180-80848-1	0.77	0.77	No Unit		0.01	Sacramento	2018
Premium Solvent	Specific Gravity	180-81823-1	0.77	0.77	No Unit		0.01	Salisbury	2018
Premium Solvent	Specific Gravity	180-79370-1	0.77	0.77	No Unit		0.01	Tampa	2018
Premium Solvent	Specific Gravity	180-76267-1	0.77	0.77	No Unit		0.01	Waukesha	2018
Premium Solvent	Specific Gravity	180-72871-1	0.77	0.77	No Unit		0.01	Sacramento	2018
Premium Solvent	Specific Gravity	180-81146-1	0.78	0.78	No Unit		0.01	Farmington	2018
Premium Solvent	Specific Gravity	180-72259-2	0.78	0.78	No Unit		0.01	Chester	2018
Premium Solvent	Specific Gravity	180-71594-1	0.78	0.78	No Unit		0.01	Santa Ana	2018

Premium Solvent	Specific Gravity	180-74277-1	0.78	0.78	No Unit		0.01	Tallahassee	2018
Premium Solvent	Specific Gravity	180-81163-1	0.79	0.79	No Unit		0.01	Barre	2018
Premium Solvent	Tetrachloroethene	180-58611-1	0.078	0.078	mg/L	J	0.23	Sacremento	2016
Premium Solvent	Tetrachloroethene	180-64796-1	0.1	0.1	mg/L	J	0.25	Wichita	2017
Premium Solvent	Tetrachloroethene	180-58744-1	0.25	0.125	mg/L	U	0.25	Albuquerque	2016
Premium Solvent	Tetrachloroethene	180-53494-1	0.25	0.125	mg/L	U	0.25	Chandler	2016
Premium Solvent	Tetrachloroethene	180-56685-1	0.25	0.125	mg/L	U	0.25	Farmington	2016
Premium Solvent	Tetrachloroethene	180-58732-1	0.25	0.125	mg/L	U	0.25	Tulsa	2016
Premium Solvent	Tetrachloroethene	180-65687-1	0.25	0.125	mg/L	U	0.25	Archdale	2017
Premium Solvent	Tetrachloroethene	180-64613-1	0.25	0.125	mg/L	U	0.25	Chandler	2017
Premium Solvent	Tetrachloroethene	180-69209-1	0.25	0.125	mg/L	U	0.25	Clackamas	2017
Premium Solvent	Tetrachloroethene	180-69242-1	0.25	0.125	mg/L	U	0.25	Oklahoma City	2017
Premium Solvent	Tetrachloroethene	180-65396-1	0.25	0.125	mg/L	U	0.25	Syracuse	2017
Premium Solvent	Tetrachloroethene	180-77004-1	0.25	0.125	mg/L	U	0.25	Chandler	2018
Premium Solvent	Tetrachloroethene	180-82330-1	0.25	0.125	mg/L	U	0.25	Clackamas	2018
Premium Solvent	Tetrachloroethene	180-80848-1	0.25	0.125	mg/L	U	0.25	Sacramento	2018
Premium Solvent	Tetrachloroethene	180-76683-1	0.25	0.125	mg/L	U	0.25	Syracuse	2018
Premium Solvent	Tetrachloroethene	180-76262-1	0.25	0.125	mg/L	U	0.25	Wichita	2018
Premium Solvent	Tetrachloroethene	180-72871-1	0.25	0.125	mg/L	U	0.25	Sacramento	2018
Premium Solvent	Tetrachloroethene	180-74277-1	0.25	0.125	mg/L	U	0.25	Tallahassee	2018
Premium Solvent	Tetrachloroethene	180-66650-1	0.18	0.18	mg/L	J	0.25	Albuquerque	2017
Premium Solvent	Tetrachloroethene	180-68919-1	0.18	0.18	mg/L	J	0.25	Waukesha	2017
Premium Solvent	Tetrachloroethene	180-58680-1	0.2	0.2	mg/L	J	0.25	Clackamas	2016
Premium Solvent	Tetrachloroethene	180-77391-1	0.2	0.2	mg/L	J	0.25	Chester	2018
Premium Solvent	Tetrachloroethene	180-80012-1	0.2	0.2	mg/L	J	0.25	Oklahoma City	2018
Premium Solvent	Tetrachloroethene	180-64751-1	0.22	0.22	mg/L	J	0.25	Kaukauna	2017
Premium Solvent	Tetrachloroethene	180-76267-1	0.22	0.22	mg/L	J	0.25	Waukesha	2018
Premium Solvent	Tetrachloroethene	180-65693-1	0.23	0.23	mg/L	J	0.25	Avon	2017
Premium Solvent	Tetrachloroethene	180-53961-1	0.24	0.24	mg/L	J	0.25	Kaukauna	2016
Premium Solvent	Tetrachloroethene	180-53962-1	0.5	0.25	mg/L	U	0.5	Kaukauna	2016
Premium Solvent	Tetrachloroethene	180-53963-1	0.29	0.29	mg/L		0.25	Kaukauna	2016
Premium Solvent	Tetrachloroethene	180-54672-1	0.31	0.31	mg/L		0.25	Waukesha	2016
Premium Solvent	Tetrachloroethene	180-64752-1	0.31	0.31	mg/L		0.25	Kaukauna	2017
Premium Solvent	Tetrachloroethene	180-77400-1	0.32	0.32	mg/L		0.25	Archdale	2018

Premium Solvent	Tetrachloroethene	180-77381-1	0.32	0.32	mg/L		0.25		Kaukauna	2018
Premium Solvent	Tetrachloroethene	180-76265-1	0.32	0.32	mg/L		0.25		Waukesha	2018
Premium Solvent	Tetrachloroethene	180-81823-1	0.35	0.35	mg/L		0.25		Salisbury	2018
Premium Solvent	Tetrachloroethene	180-77070-1	0.36	0.36	mg/L		0.25		Lackawanna	2018
Premium Solvent	Tetrachloroethene	180-71594-1	0.38	0.38	mg/L		0.25		Santa Ana	2018
Premium Solvent	Tetrachloroethene	180-77710-1	0.41	0.41	mg/L		0.25		Cohoes	2018
Premium Solvent	Tetrachloroethene	180-64753-1	0.43	0.43	mg/L		0.25		Kaukauna	2017
Premium Solvent	Tetrachloroethene	180-59840-1	0.43	0.43	mg/L		0.25		Cohoes	2017
Premium Solvent	Tetrachloroethene	180-54676-1	0.44	0.44	mg/L		0.25		Waukesha	2016
Premium Solvent	Tetrachloroethene	180-78677-1	0.44	0.44	mg/L		0.25		Santa Ana	2018
Premium Solvent	Tetrachloroethene	180-76266-1	0.44	0.44	mg/L		0.25		Waukesha	2018
Premium Solvent	Tetrachloroethene	180-60012-1	0.5	0.5	mg/L		0.25		Chesapeake	2017
Premium Solvent	Tetrachloroethene	180-80742-1	0.54	0.54	mg/L		0.25		Avon	2018
Premium Solvent	Tetrachloroethene	180-54675-1	0.86	0.86	mg/L		0.25		Waukesha	2016
Premium Solvent	Tetrachloroethene	180-77383-1	0.87	0.87	mg/L		0.25		Kaukauna	2018
Premium Solvent	Tetrachloroethene	180-81146-1	1.1	1.1	mg/L		0.25		Farmington	2018
Premium Solvent	Tetrachloroethene	180-55533-1	1.2	1.2	mg/L		0.5		Syracuse	2016
Premium Solvent	Tetrachloroethene	180-68924-1	1.2	1.2	mg/L		0.25		Waukesha	2017
Premium Solvent	Tetrachloroethene	180-81014-1	1.3	1.3	mg/L	H	0.25		Albuquerque	2018
Premium Solvent	Tetrachloroethene	180-76988-1	1.6	1.6	mg/L		0.25	52	Salt Lake City	2018
Premium Solvent	Tetrachloroethene	180-56003-1	2	2	mg/L		0.5		St. Pauls	2016
Premium Solvent	Tetrachloroethene	180-79370-1	2.3	2.3	mg/L		0.25		Tampa	2018
Premium Solvent	Tetrachloroethene	180-58394-1	3.1	3.1	mg/L		0.25		Charlotte	2016
Premium Solvent	Tetrachloroethene	180-70383-1	3.6	3.6	mg/L		0.25		Grand Island	2017
Premium Solvent	Tetrachloroethene	180-58138-1	3.8	3.8	mg/L		0.25		Tampa	2016
Premium Solvent	Tetrachloroethene	180-54680-1	3.9	3.9	mg/L		0.25		Waukesha	2016
Premium Solvent	Tetrachloroethene	180-54674-1	4	4	mg/L		0.25		Waukesha	2016
Premium Solvent	Tetrachloroethene	180-80014-1	4.2	4.2	mg/L		0.25		Oklahoma City	2018
Premium Solvent	Tetrachloroethene	180-54673-1	4.3	4.3	mg/L		0.25		Waukesha	2016
Premium Solvent	Tetrachloroethene	180-54678-1	4.6	4.6	mg/L		0.25		Waukesha	2016
Premium Solvent	Tetrachloroethene	180-59969-1	4.8	4.8	mg/L		0.25		Lackawanna	2017
Premium Solvent	Tetrachloroethene	180-54679-1	5.2	5.2	mg/L		0.25		Waukesha	2016
Premium Solvent	Tetrachloroethene	180-58266-1	5.5	5.5	mg/L		0.25		Vinton	2016
Premium Solvent	Tetrachloroethene	180-78463-1	8.9	8.9	mg/L		0.25		St Pauls	2018

Premium Solvent	Tetrachloroethene	180-68416-1	10	10	mg/L		0.25	Farmington	2017
Premium Solvent	Tetrachloroethene	180-60895-1	14	14	mg/L		0.25	Archdale	2017
Premium Solvent	Tetrachloroethene	180-70392-1	15	15	mg/L		0.25	Raleigh	2017
Premium Solvent	Tetrachloroethene	180-54677-1	19	19	mg/L		0.25	Waukesha	2016
Premium Solvent	Tetrachloroethene	180-68772-1	31	31	mg/L		0.25	St Pauls	2017
Premium Solvent	Tetrachloroethene	180-65928-1	32	32	mg/L		0.25	Cohoes	2017
Premium Solvent	Tetrachloroethene	180-66253-1	67	67	mg/L		2.5	Vinton	2017
Premium Solvent	Tetrachloroethene	180-69237-1	130	130	mg/L		5	Omaha	2017
Premium Solvent	Tetrachloroethene	180-60141-1	230	230	mg/L		5	Avon	2017
Premium Solvent	Tetrachloroethene	180-65696-1	350	350	mg/L		25	Lackawanna	2017
Premium Solvent	Tetrachloroethene	180-57964-1	510	510	mg/L		50	Omaha	2016
Premium Solvent	Tetrachloroethene	180-72259-2	670	670	mg/L		50	Chester	2018
Premium Solvent	Tetrachloroethene	180-68925-1	730	730	mg/L		25	Waukesha	2017
Premium Solvent	Tetrachloroethene	180-77125-1	730	730	mg/L		50	Boise	2018
Premium Solvent	Tetrachloroethene	180-77382-1	750	750	mg/L		50	Kaukauna	2018
Premium Solvent	Tetrachloroethene	180-70321-1	800	800	mg/L	E	0.25	Chesapeake	2017
Premium Solvent	Tetrachloroethene	180-78689-1	1400	1400	mg/L		100	Vinton	2018
Premium Solvent	Tetrachloroethene	180-52527-1	2300	2300	mg/L		100	Boise	2016
Premium Solvent	Tetrachloroethene	180-54771-1	3200	3200	mg/L		100	Chester	2016
Premium Solvent	Tetrachloroethene	180-71540-1	4500	4500	mg/L		100	Salisbury	2018
Premium Solvent	Tetrachloroethene	180-81163-1	5400	5400	mg/L		100	Barre	2018
Premium Solvent	Tetrachloroethene	180-60618-1	14000	14000	mg/L		100	Barre	2017
Premium Solvent	Trichloroethene	180-58611-1	0.23	0.115	mg/L	U	0.23	Sacremento	2016
Premium Solvent	Trichloroethene	180-58744-1	0.25	0.125	mg/L	U	0.25	Albuquerque	2016
Premium Solvent	Trichloroethene	180-52527-1	0.25	0.125	mg/L	U	0.25	Boise	2016
Premium Solvent	Trichloroethene	180-53494-1	0.25	0.125	mg/L	U	0.25	Chandler	2016
Premium Solvent	Trichloroethene	180-58394-1	0.25	0.125	mg/L	U	0.25	Charlotte	2016
Premium Solvent	Trichloroethene	180-58680-1	0.25	0.125	mg/L	U	0.25	Clackamas	2016
Premium Solvent	Trichloroethene	180-56685-1	0.25	0.125	mg/L	U	0.25	Farmington	2016
Premium Solvent	Trichloroethene	180-53963-1	0.25	0.125	mg/L	U	0.25	Kaukauna	2016
Premium Solvent	Trichloroethene	180-57964-1	0.25	0.125	mg/L	U	0.25	Omaha	2016
Premium Solvent	Trichloroethene	180-58138-1	0.25	0.125	mg/L	U	0.25	Tampa	2016
Premium Solvent	Trichloroethene	180-58732-1	0.25	0.125	mg/L	U	0.25	Tulsa	2016
Premium Solvent	Trichloroethene	180-58266-1	0.25	0.125	mg/L	U	0.25	Vinton	2016

Premium Solvent	Trichloroethene	180-54672-1	0.25	0.125	mg/L	U	0.25	Waukesha	2016
Premium Solvent	Trichloroethene	180-54673-1	0.25	0.125	mg/L	U	0.25	Waukesha	2016
Premium Solvent	Trichloroethene	180-54674-1	0.25	0.125	mg/L	U	0.25	Waukesha	2016
Premium Solvent	Trichloroethene	180-54675-1	0.25	0.125	mg/L	U	0.25	Waukesha	2016
Premium Solvent	Trichloroethene	180-54676-1	0.25	0.125	mg/L	U	0.25	Waukesha	2016
Premium Solvent	Trichloroethene	180-54677-1	0.25	0.125	mg/L	U	0.25	Waukesha	2016
Premium Solvent	Trichloroethene	180-54678-1	0.25	0.125	mg/L	U	0.25	Waukesha	2016
Premium Solvent	Trichloroethene	180-54679-1	0.25	0.125	mg/L	U	0.25	Waukesha	2016
Premium Solvent	Trichloroethene	180-54680-1	0.25	0.125	mg/L	U	0.25	Waukesha	2016
Premium Solvent	Trichloroethene	180-66650-1	0.25	0.125	mg/L	U	0.25	Albuquerque	2017
Premium Solvent	Trichloroethene	180-65687-1	0.25	0.125	mg/L	U	0.25	Archdale	2017
Premium Solvent	Trichloroethene	180-65693-1	0.25	0.125	mg/L	U	0.25	Avon	2017
Premium Solvent	Trichloroethene	180-64613-1	0.25	0.125	mg/L	U	0.25	Chandler	2017
Premium Solvent	Trichloroethene	180-70321-1	0.25	0.125	mg/L	U	0.25	Chesapeake	2017
Premium Solvent	Trichloroethene	180-69209-1	0.25	0.125	mg/L	U	0.25	Clackamas	2017
Premium Solvent	Trichloroethene	180-65928-1	0.25	0.125	mg/L	U	0.25	Cohoes	2017
Premium Solvent	Trichloroethene	180-68416-1	0.25	0.125	mg/L	U	0.25	Farmington	2017
Premium Solvent	Trichloroethene	180-70383-1	0.25	0.125	mg/L	U	0.25	Grand Island	2017
Premium Solvent	Trichloroethene	180-64751-1	0.25	0.125	mg/L	U	0.25	Kaukauna	2017
Premium Solvent	Trichloroethene	180-64752-1	0.25	0.125	mg/L	U	0.25	Kaukauna	2017
Premium Solvent	Trichloroethene	180-64753-1	0.25	0.125	mg/L	U	0.25	Kaukauna	2017
Premium Solvent	Trichloroethene	180-65696-1	0.25	0.125	mg/L	U	0.25	Lackawanna	2017
Premium Solvent	Trichloroethene	180-69242-1	0.25	0.125	mg/L	U	0.25	Oklahoma City	2017
Premium Solvent	Trichloroethene	180-69237-1	0.25	0.125	mg/L	U	0.25	Omaha	2017
Premium Solvent	Trichloroethene	180-68772-1	0.25	0.125	mg/L	U	0.25	St Pauls	2017
Premium Solvent	Trichloroethene	180-65396-1	0.25	0.125	mg/L	U	0.25	Syracuse	2017
Premium Solvent	Trichloroethene	180-66253-1	0.25	0.125	mg/L	U	0.25	Vinton	2017
Premium Solvent	Trichloroethene	180-68919-1	0.25	0.125	mg/L	U	0.25	Waukesha	2017
Premium Solvent	Trichloroethene	180-68924-1	0.25	0.125	mg/L	U	0.25	Waukesha	2017
Premium Solvent	Trichloroethene	180-68925-1	0.25	0.125	mg/L	U	0.25	Waukesha	2017
Premium Solvent	Trichloroethene	180-64796-1	0.25	0.125	mg/L	U	0.25	Wichita	2017
Premium Solvent	Trichloroethene	180-60141-1	0.25	0.125	mg/L	U	0.25	Avon	2017
Premium Solvent	Trichloroethene	180-60012-1	0.25	0.125	mg/L	U	0.25	Chesapeake	2017
Premium Solvent	Trichloroethene	180-59840-1	0.25	0.125	mg/L	U	0.25	Cohoes	2017

Premium Solvent	Trichloroethene	180-59969-1	0.25	0.125	mg/L	U	0.25		Lackawanna	2017
Premium Solvent	Trichloroethene	180-60895-1	0.25	0.125	mg/L	U	0.25		Archdale	2017
Premium Solvent	Trichloroethene	180-60618-1	0.25	0.125	mg/L	U	0.25		Barre	2017
Premium Solvent	Trichloroethene	180-81014-1	0.25	0.125	mg/L	U H	0.25		Albuquerque	2018
Premium Solvent	Trichloroethene	180-77400-1	0.25	0.125	mg/L	U	0.25		Archdale	2018
Premium Solvent	Trichloroethene	180-80742-1	0.25	0.125	mg/L	U	0.25	52	Avon	2018
Premium Solvent	Trichloroethene	180-81163-1	0.25	0.125	mg/L	U	0.25		Barre	2018
Premium Solvent	Trichloroethene	180-77125-1	0.25	0.125	mg/L	U	0.25		Boise	2018
Premium Solvent	Trichloroethene	180-77004-1	0.25	0.125	mg/L	U	0.25		Chandler	2018
Premium Solvent	Trichloroethene	180-77391-1	0.25	0.125	mg/L	U	0.25		Chester	2018
Premium Solvent	Trichloroethene	180-82330-1	0.25	0.125	mg/L	U	0.25		Clackamas	2018
Premium Solvent	Trichloroethene	180-77710-1	0.25	0.125	mg/L	U	0.25		Cohoes	2018
Premium Solvent	Trichloroethene	180-81146-1	0.25	0.125	mg/L	U	0.25		Farmington	2018
Premium Solvent	Trichloroethene	180-77381-1	0.25	0.125	mg/L	U	0.25		Kaukauna	2018
Premium Solvent	Trichloroethene	180-77383-1	0.25	0.125	mg/L	U	0.25		Kaukauna	2018
Premium Solvent	Trichloroethene	180-77070-1	0.25	0.125	mg/L	U	0.25		Lackawanna	2018
Premium Solvent	Trichloroethene	180-80012-1	0.25	0.125	mg/L	U	0.25		Oklahoma City	2018
Premium Solvent	Trichloroethene	180-80014-1	0.25	0.125	mg/L	U	0.25		Oklahoma City	2018
Premium Solvent	Trichloroethene	180-80848-1	0.25	0.125	mg/L	U	0.25		Sacramento	2018
Premium Solvent	Trichloroethene	180-81823-1	0.25	0.125	mg/L	U	0.25		Salisbury	2018
Premium Solvent	Trichloroethene	180-76988-1	0.25	0.125	mg/L	U	0.25		Salt Lake City	2018
Premium Solvent	Trichloroethene	180-78677-1	0.25	0.125	mg/L	U	0.25		Santa Ana	2018
Premium Solvent	Trichloroethene	180-78463-1	0.25	0.125	mg/L	U	0.25		St Pauls	2018
Premium Solvent	Trichloroethene	180-76683-1	0.25	0.125	mg/L	U	0.25		Syracuse	2018
Premium Solvent	Trichloroethene	180-79370-1	0.25	0.125	mg/L	U	0.25		Tampa	2018
Premium Solvent	Trichloroethene	180-78689-1	0.25	0.125	mg/L	U	0.25		Vinton	2018
Premium Solvent	Trichloroethene	180-76265-1	0.25	0.125	mg/L	U	0.25		Waukesha	2018
Premium Solvent	Trichloroethene	180-76266-1	0.25	0.125	mg/L	U	0.25		Waukesha	2018
Premium Solvent	Trichloroethene	180-76267-1	0.25	0.125	mg/L	U	0.25		Waukesha	2018
Premium Solvent	Trichloroethene	180-76262-1	0.25	0.125	mg/L	U	0.25		Wichita	2018
Premium Solvent	Trichloroethene	180-72259-2	0.25	0.125	mg/L	U	0.25		Chester	2018
Premium Solvent	Trichloroethene	180-72871-1	0.25	0.125	mg/L	U	0.25		Sacramento	2018
Premium Solvent	Trichloroethene	180-71540-1	0.25	0.125	mg/L	U	0.25		Salisbury	2018
Premium Solvent	Trichloroethene	180-71594-1	0.25	0.125	mg/L	U	0.25		Santa Ana	2018

Premium Solvent	Trichloroethene	180-74277-1	0.25	0.125	mg/L	U	0.25	Tallahassee	2018
Premium Solvent	Trichloroethene	180-70392-1	0.15	0.15	mg/L	J	0.25	Raleigh	2017
Premium Solvent	Trichloroethene	180-53962-1	0.5	0.25	mg/L	U	0.5	Kaukauna	2016
Premium Solvent	Trichloroethene	180-56003-1	0.5	0.25	mg/L	U	0.5	St. Pauls	2016
Premium Solvent	Trichloroethene	180-55533-1	0.5	0.25	mg/L	U	0.5	Syracuse	2016
Premium Solvent	Trichloroethene	180-53961-1	0.26	0.26	mg/L		0.25	Kaukauna	2016
Premium Solvent	Trichloroethene	180-77382-1	0.33	0.33	mg/L		0.25	Kaukauna	2018
Premium Solvent	Trichloroethene	180-54771-1	5.7	5.7	mg/L		0.25	Chester	2016
Premium Solvent	Vinyl Chloride	180-58744-1	0.1	0.05	mg/L	U	0.1	Albuquerque	2016
Premium Solvent	Vinyl Chloride	180-52527-1	0.1	0.05	mg/L	U	0.1	Boise	2016
Premium Solvent	Vinyl Chloride	180-53494-1	0.1	0.05	mg/L	U	0.1	Chandler	2016
Premium Solvent	Vinyl Chloride	180-58394-1	0.1	0.05	mg/L	U	0.1	Charlotte	2016
Premium Solvent	Vinyl Chloride	180-54771-1	0.1	0.05	mg/L	U	0.1	Chester	2016
Premium Solvent	Vinyl Chloride	180-58680-1	0.1	0.05	mg/L	U	0.1	Clackamas	2016
Premium Solvent	Vinyl Chloride	180-56685-1	0.1	0.05	mg/L	U	0.1	Farmington	2016
Premium Solvent	Vinyl Chloride	180-53961-1	0.1	0.05	mg/L	U	0.1	Kaukauna	2016
Premium Solvent	Vinyl Chloride	180-53963-1	0.1	0.05	mg/L	U	0.1	Kaukauna	2016
Premium Solvent	Vinyl Chloride	180-57964-1	0.1	0.05	mg/L	U	0.1	Omaha	2016
Premium Solvent	Vinyl Chloride	180-58138-1	0.1	0.05	mg/L	U	0.1	Tampa	2016
Premium Solvent	Vinyl Chloride	180-58732-1	0.1	0.05	mg/L	U	0.1	Tulsa	2016
Premium Solvent	Vinyl Chloride	180-58266-1	0.1	0.05	mg/L	U	0.1	Vinton	2016
Premium Solvent	Vinyl Chloride	180-54672-1	0.1	0.05	mg/L	U	0.1	Waukesha	2016
Premium Solvent	Vinyl Chloride	180-54673-1	0.1	0.05	mg/L	U	0.1	Waukesha	2016
Premium Solvent	Vinyl Chloride	180-54674-1	0.1	0.05	mg/L	U	0.1	Waukesha	2016
Premium Solvent	Vinyl Chloride	180-54675-1	0.1	0.05	mg/L	U	0.1	Waukesha	2016
Premium Solvent	Vinyl Chloride	180-54676-1	0.1	0.05	mg/L	U	0.1	Waukesha	2016
Premium Solvent	Vinyl Chloride	180-54677-1	0.1	0.05	mg/L	U	0.1	Waukesha	2016
Premium Solvent	Vinyl Chloride	180-54678-1	0.1	0.05	mg/L	U	0.1	Waukesha	2016
Premium Solvent	Vinyl Chloride	180-54679-1	0.1	0.05	mg/L	U	0.1	Waukesha	2016
Premium Solvent	Vinyl Chloride	180-54680-1	0.1	0.05	mg/L	U	0.1	Waukesha	2016
Premium Solvent	Vinyl chloride	180-66650-1	0.1	0.05	mg/L	U	0.1	Albuquerque	2017
Premium Solvent	Vinyl chloride	180-65687-1	0.1	0.05	mg/L	U	0.1	Archdale	2017
Premium Solvent	Vinyl chloride	180-65693-1	0.1	0.05	mg/L	U	0.1	Avon	2017
Premium Solvent	Vinyl chloride	180-64613-1	0.1	0.05	mg/L	U	0.1	Chandler	2017

Premium Solvent	Vinyl chloride	180-70321-1	0.1	0.05	mg/L	U	0.1		Chesapeake	2017
Premium Solvent	Vinyl chloride	180-69209-1	0.1	0.05	mg/L	U	0.1		Clackamas	2017
Premium Solvent	Vinyl chloride	180-65928-1	0.1	0.05	mg/L	U	0.1		Cohoes	2017
Premium Solvent	Vinyl chloride	180-68416-1	0.1	0.05	mg/L	U	0.1		Farmington	2017
Premium Solvent	Vinyl chloride	180-70383-1	0.1	0.05	mg/L	U	0.1		Grand Island	2017
Premium Solvent	Vinyl chloride	180-64751-1	0.1	0.05	mg/L	U	0.1		Kaukauna	2017
Premium Solvent	Vinyl chloride	180-64752-1	0.1	0.05	mg/L	U	0.1		Kaukauna	2017
Premium Solvent	Vinyl chloride	180-64753-1	0.1	0.05	mg/L	U	0.1		Kaukauna	2017
Premium Solvent	Vinyl chloride	180-65696-1	0.1	0.05	mg/L	U	0.1		Lackawanna	2017
Premium Solvent	Vinyl chloride	180-69242-1	0.1	0.05	mg/L	U	0.1		Oklahoma City	2017
Premium Solvent	Vinyl chloride	180-69237-1	0.1	0.05	mg/L	U	0.1		Omaha	2017
Premium Solvent	Vinyl chloride	180-70392-1	0.1	0.05	mg/L	U	0.1		Raleigh	2017
Premium Solvent	Vinyl chloride	180-68772-1	0.1	0.05	mg/L	U	0.1		St Pauls	2017
Premium Solvent	Vinyl chloride	180-65396-1	0.1	0.05	mg/L	U	0.1		Syracuse	2017
Premium Solvent	Vinyl chloride	180-66253-1	0.1	0.05	mg/L	U	0.1		Vinton	2017
Premium Solvent	Vinyl chloride	180-68919-1	0.1	0.05	mg/L	U	0.1		Waukesha	2017
Premium Solvent	Vinyl chloride	180-68924-1	0.1	0.05	mg/L	U	0.1		Waukesha	2017
Premium Solvent	Vinyl chloride	180-68925-1	0.1	0.05	mg/L	U	0.1		Waukesha	2017
Premium Solvent	Vinyl chloride	180-64796-1	0.1	0.05	mg/L	U	0.1		Wichita	2017
Premium Solvent	Vinyl chloride	180-60141-1	0.1	0.05	mg/L	U	0.1		Avon	2017
Premium Solvent	Vinyl chloride	180-60012-1	0.1	0.05	mg/L	U	0.1		Chesapeake	2017
Premium Solvent	Vinyl chloride	180-59840-1	0.1	0.05	mg/L	U	0.1		Cohoes	2017
Premium Solvent	Vinyl chloride	180-59969-1	0.1	0.05	mg/L	U	0.1		Lackawanna	2017
Premium Solvent	Vinyl chloride	180-60895-1	0.1	0.05	mg/L	U	0.1		Archdale	2017
Premium Solvent	Vinyl chloride	180-60618-1	0.1	0.05	mg/L	U	0.1		Barre	2017
Premium Solvent	Vinyl chloride	180-81014-1	0.1	0.05	mg/L	U H	0.1	52	Albuquerque	2018
Premium Solvent	Vinyl chloride	180-77400-1	0.1	0.05	mg/L	U	0.1		Archdale	2018
Premium Solvent	Vinyl chloride	180-80742-1	0.1	0.05	mg/L	U	0.1		Avon	2018
Premium Solvent	Vinyl chloride	180-81163-1	0.1	0.05	mg/L	U	0.1		Barre	2018
Premium Solvent	Vinyl chloride	180-77125-1	0.1	0.05	mg/L	U	0.1		Boise	2018
Premium Solvent	Vinyl chloride	180-77004-1	0.1	0.05	mg/L	U	0.1		Chandler	2018
Premium Solvent	Vinyl chloride	180-77391-1	0.1	0.05	mg/L	U	0.1		Chester	2018
Premium Solvent	Vinyl chloride	180-82330-1	0.1	0.05	mg/L	U	0.1		Clackamas	2018
Premium Solvent	Vinyl chloride	180-77710-1	0.1	0.05	mg/L	U	0.1		Cohoes	2018

Premium Solvent	Vinyl chloride	180-81146-1	0.1	0.05	mg/L	U	0.1	Farmington	2018
Premium Solvent	Vinyl chloride	180-77381-1	0.1	0.05	mg/L	U	0.1	Kaukauna	2018
Premium Solvent	Vinyl chloride	180-77382-1	0.1	0.05	mg/L	U	0.1	Kaukauna	2018
Premium Solvent	Vinyl chloride	180-77383-1	0.1	0.05	mg/L	U	0.1	Kaukauna	2018
Premium Solvent	Vinyl chloride	180-77070-1	0.1	0.05	mg/L	U	0.1	Lackawanna	2018
Premium Solvent	Vinyl chloride	180-80012-1	0.1	0.05	mg/L	U	0.1	Oklahoma City	2018
Premium Solvent	Vinyl chloride	180-80014-1	0.1	0.05	mg/L	U	0.1	Oklahoma City	2018
Premium Solvent	Vinyl chloride	180-80848-1	0.1	0.05	mg/L	U	0.1	Sacramento	2018
Premium Solvent	Vinyl chloride	180-81823-1	0.1	0.05	mg/L	U	0.1	Salisbury	2018
Premium Solvent	Vinyl chloride	180-76988-1	0.1	0.05	mg/L	U	0.1	Salt Lake City	2018
Premium Solvent	Vinyl chloride	180-78677-1	0.1	0.05	mg/L	U	0.1	Santa Ana	2018
Premium Solvent	Vinyl chloride	180-78463-1	0.1	0.05	mg/L	U	0.1	St Pauls	2018
Premium Solvent	Vinyl chloride	180-76683-1	0.1	0.05	mg/L	U	0.1	Syracuse	2018
Premium Solvent	Vinyl chloride	180-79370-1	0.1	0.05	mg/L	U	0.1	Tampa	2018
Premium Solvent	Vinyl chloride	180-78689-1	0.1	0.05	mg/L	U	0.1	Vinton	2018
Premium Solvent	Vinyl chloride	180-76265-1	0.1	0.05	mg/L	U	0.1	Waukesha	2018
Premium Solvent	Vinyl chloride	180-76266-1	0.1	0.05	mg/L	U	0.1	Waukesha	2018
Premium Solvent	Vinyl chloride	180-76267-1	0.1	0.05	mg/L	U	0.1	Waukesha	2018
Premium Solvent	Vinyl chloride	180-76262-1	0.1	0.05	mg/L	U	0.1	Wichita	2018
Premium Solvent	Vinyl chloride	180-72259-2	0.1	0.05	mg/L	U	0.1	Chester	2018
Premium Solvent	Vinyl chloride	180-72871-1	0.1	0.05	mg/L	U	0.1	Sacramento	2018
Premium Solvent	Vinyl chloride	180-71540-1	0.1	0.05	mg/L	U	0.1	Salisbury	2018
Premium Solvent	Vinyl chloride	180-71594-1	0.1	0.05	mg/L	U	0.1	Santa Ana	2018
Premium Solvent	Vinyl chloride	180-74277-1	0.1	0.05	mg/L	U	0.1	Tallahassee	2018
Premium Solvent	Vinyl Chloride	180-58611-1	0.15	0.075	mg/L	U	0.15	Sacremento	2016
Premium Solvent	Vinyl Chloride	180-53962-1	0.2	0.1	mg/L	U	0.2	Kaukauna	2016
Premium Solvent	Vinyl Chloride	180-56003-1	0.2	0.1	mg/L	U	0.2	St. Pauls	2016
Premium Solvent	Vinyl Chloride	180-55533-1	0.2	0.1	mg/L	U	0.2	Syracuse	2016

APPENDIX III-4.B

2019 AR Data Summary for Waste Aqueous Parts Washer (APW)

MATRIX	PARAMETER	LAB ID	RESULT	RANKED DATA	UNITS	QUALIFIER	REPORTING LIMIT	Uth VALUE	COUNT	FACILITY	YEAR
APW	1,1-Dichloroethene	180-1123-1	0.2	0.1	mg/L	U	0.2			Sacramento	2011
APW	1,1-Dichloroethene	180-1933-1	0.2	0.1	mg/L	U	0.2			Los Angeles	2011
APW	1,1-Dichloroethene	180-1862-1	0.2	0.1	mg/L	U	0.2			Santa Ana	2011
APW	1,1-Dichloroethene	180-1957-1	0.2	0.1	mg/L	U	0.2			Fresno	2011
APW	1,1-Dichloroethene	180-1961-1	0.2	0.1	mg/L	U	0.2			Highland	2011
APW Bulk	1,1-Dichloroethene	180-1968-1	0.2	0.1	mg/L	U	0.2			El Monte	2011
APW	1,1-Dichloroethene	180-12869-1	0.2	0.1	mg/L	U	0.2			Los Angeles	2012
APW	1,1-Dichloroethene	180-13030-1	0.2	0.1	mg/L	U	0.2			Highland	2012
APW	1,1-Dichloroethene	180-13997-1	0.2	0.1	mg/L	U	0.2			Highland	2012
APW	1,1-Dichloroethene	180-12870-1	0.2	0.1	mg/L	U	0.2			Fresno	2012
APW	1,1-Dichloroethene	180-11964-1	0.2	0.1	mg/L	U	0.2			Sacramento	2012
Aqueous IC	1,1-Dichloroethene	180-11264-1	0.2	0.1	mg/L	U	0.2			Santa Ana	2012
Aqueous IC	1,1-Dichloroethene	180-11971-1	0.2	0.1	mg/L	U	0.2			Sacramento	2012
APW	1,1-Dichloroethene	180-23542-1	0.2	0.1	mg/L	U	0.2			Fresno	2013
APW	1,1-Dichloroethene	180-23543-1	0.2	0.1	mg/L	U	0.2			Highland	2013
APW	1,1-Dichloroethene	180-23540-1	0.2	0.1	mg/L	U	0.2			Los Angeles	2013
APW	1,1-Dichloroethene	180-25501-1	0.2	0.1	mg/L	U	0.2			Sacramento	2013
APW Bulk Tank	1,1-Dichloroethene	180-35276-1	0.2	0.1	mg/L	U	0.2			Highland	2014
APW Bulk Tank	1,1-Dichloroethene	180-35141-1	0.2	0.1	mg/L	U	0.2			Los Angeles	2014
Aqueous IC	1,1-Dichloroethene	180-35277-1	0.2	0.1	mg/L	U	0.2			Los Angeles	2014
APW	1,1-Dichloroethene	180-35960-2	0.2	0.1	mg/L	U	0.2			Sacramento	2014
APW	1,1-Dichloroethene	180-38298-1	0.2	0.1	mg/L	U	0.2			Boise	2014
APW	1,1-Dichloroethene	180-39595-1	0.2	0.1	mg/L	U *	0.2			Fresno	2014
APW	1,1-Dichloroethene	180-42909-1	0.2	0.1	mg/L	U	0.2			Boise	2015
APW	1,1-Dichloroethene	180-49157-1	0.2	0.1	mg/L	U	0.2			Sacramento	2015
Aqueous IC	1,1-Dichloroethene	180-42424-1	0.2	0.1	mg/L	U *	0.2			Chandler	2015
Aqueous IC	1,1-Dichloroethene	180-46921-1	0.2	0.1	mg/L	U	0.2			Los Angeles	2015
APW Bulk	1,1-Dichloroethene	180-47817-1	0.2	0.1	mg/L	U	0.2			Highland	2015
APW Bulk	1,1-Dichloroethene	180-46604-1	0.2	0.1	mg/L	U	0.2			Los Angeles	2015
APW	1,1-Dichloroethene	180-52260-1	0.2	0.1	mg/L	U	0.2			Santa Ana	2015
APW Bulk Tank	1,1-Dichloroethene	180-49517-1	0.2	0.1	mg/L	U	0.2			Fresno	2015
APW	1,1-Dichloroethene	180-52525-1	0.2	0.1	mg/L	U	0.2			Boise	2016
APW	1,1-Dichloroethene	180-57948-2	0.2	0.1	mg/L	U	0.2			Los Angeles	2016

APW	1,1-Dichloroethene	180-58632-1	0.2	0.1	mg/L	U	0.2			Sacramento	2016
APW	1,1-Dichloroethene	180-58151-1	0.2	0.1	mg/L	U	0.2			Santa Ana	2016
Aqueous IC	1,1-Dichloroethene	180-57955-1	0.2	0.1	mg/L	U	0.2			Los Angeles	2016
Aqueous IC	1,1-Dichloroethene	180-58633-1	0.2	0.1	mg/L	U	0.2			Sacramento	2016
APW Bulk Tank	1,1-Dichloroethene	180-58407-1	0.2	0.1	mg/L	U	0.2			Fresno	2016
APW Bulk Tank	1,1-Dichloroethene	180-58654-1	0.2	0.1	mg/L	U	0.2			Highland	2016
APW Bulk Tank	1,1-Dichloroethene	180-57950-2	0.2	0.1	mg/L	U	0.2			Los Angeles	2016
APW Bulk Tank	1,1-Dichloroethene	180-58626-1	0.2	0.1	mg/L	U	0.2			Sacramento	2016
APW Bulk Tank	1,1-Dichloroethene	180-58156-1	0.2	0.1	mg/L	U	0.2			Santa Ana	2016
APW	1,1-Dichloroethene	180-66778-1	0.2	0.1	mg/L	U	0.2			Boise	2017
APW	1,1-Dichloroethene	180-64610-1	0.2	0.1	mg/L	U	0.2			Chandler	2017
APW	1,1-Dichloroethene	180-68411-1	0.2	0.1	mg/L	U	0.2			Los Angeles	2017
APW	1,1-Dichloroethene	180-70635-1	0.2	0.1	mg/L	U	0.2			Salisbury	2017
APW	1,1-Dichloroethene	180-67799-1	0.2	0.1	mg/L	U	0.2	47	78	Santa Ana	2017
APW	1,1-Dichloroethene	180-64793-1	0.2	0.1	mg/L	U	0.2			Wichita	2017
APW	1,1-Dichloroethene	180-70452-1	0.2	0.1	mg/L	U	0.2			Sacramento	2017
APW Bulk Tank	1,1-Dichloroethene	180-68412-1	0.2	0.1	mg/L	U	0.2			Los Angeles	2017
APW Bulk Tank	1,1-Dichloroethene	180-70449-1	0.2	0.1	mg/L	U	0.2			Sacramento	2017
Aqueous IC	1,1-Dichloroethene	180-67798-1	0.2	0.1	mg/L	U	0.2			Santa Ana	2017
APW	1,1-Dichloroethene	180-77402-1	0.2	0.1	mg/L	U	0.2			Boise	2018
APW	1,1-Dichloroethene	180-76916-1	0.2	0.1	mg/L	U	0.2			Chandler	2018
APW	1,1-Dichloroethene	180-82402-1	0.2	0.1	mg/L	U	0.2			Clackamas	2018
APW	1,1-Dichloroethene	180-79848-1	0.2	0.1	mg/L	U	0.2			Los Angeles	2018
APW	1,1-Dichloroethene	180-79774-1	0.2	0.1	mg/L	U	0.2			Oklahoma City	2018
APW	1,1-Dichloroethene	180-81361-1	0.2	0.1	mg/L	U F2 F1	0.2			Salisbury	2018
APW	1,1-Dichloroethene	180-76918-1	0.2	0.1	mg/L	U	0.2			Salt Lake City	2018
APW	1,1-Dichloroethene	180-78618-1	0.2	0.1	mg/L	U	0.2			Santa Ana	2018
APW	1,1-Dichloroethene	180-76205-1	0.2	0.1	mg/L	U	0.2			Wichita	2018
APW Bulk Tank	1,1-Dichloroethene	180-79850-2	0.2	0.1	mg/L	U	0.2			Los Angeles	2018
APW Bulk Tank	1,1-Dichloroethene	180-78615-1	0.2	0.1	mg/L	U	0.2			Santa Ana	2018
APW Bulk Tank	1,1-Dichloroethene	180-71593-1	0.2	0.1	mg/L	U	0.2			Santa Ana	2018
Aqueous IC	1,1-Dichloroethene	180-80856-1	0.2	0.1	mg/L	U	0.2			Sacramento	2018
Aqueous IC	1,1-Dichloroethene	180-82080-2	0.2	0.1	mg/L	U	0.2			Santa Ana	2018
Aqueous IC	1,1-Dichloroethene	180-23587-1	0.25	0.125	mg/L	U	0.25			Highland	2013

Aqueous IC	1,1-Dichloroethene	180-1133-2	0.5	0.25	mg/L	U	0.5	Sacramento	2011
Aqueous IC	1,1-Dichloroethene	180-1863-2	0.5	0.25	mg/L	U	0.5	Santa Ana	2011
Aqueous IC	1,1-Dichloroethene	180-1930-2	0.5	0.25	mg/L	U	0.5	Los Angeles	2011
Aqueous IC	1,1-Dichloroethene	180-1963-1	0.5	0.25	mg/L	U	0.5	Highland	2011
Aqueous IC	1,1-Dichloroethene	180-23567-1	0.5	0.25	mg/L	U	0.5	Los Angeles	2013
APW Bulk Tank	1,1-Dichloroethene	180-25297-1	0.5	0.25	mg/L	U	0.5	El Monte	2013
APW Bulk Tank	1,1-Dichloroethene	180-34895-1	0.5	0.25	mg/L	U	0.5	Santa Ana	2014
Aqueous IC	1,1-Dichloroethene	180-34938-2	0.5	0.25	mg/L	U	0.5	Santa Ana	2014
Aqueous IC	1,1-Dichloroethene	180-52258-1	0.5	0.25	mg/L	U	0.5	Santa Ana	2015
APW	1,1-Dichloroethene	180-80854-1	4	2	mg/L	U	4	Sacramento	2018
Aqueous IC	1,1-Dichloroethene	180-25755-1	40	20	mg/L	U	40	Santa Ana	2013
APW	1,2-Dichloroethane	180-1123-1	0.2	0.1	mg/L	U	0.2	Sacramento	2011
APW	1,2-Dichloroethane	180-1933-1	0.2	0.1	mg/L	U	0.2	Los Angeles	2011
APW	1,2-Dichloroethane	180-1862-1	0.2	0.1	mg/L	U	0.2	Santa Ana	2011
APW	1,2-Dichloroethane	180-1957-1	0.2	0.1	mg/L	U	0.2	Fresno	2011
APW	1,2-Dichloroethane	180-1961-1	0.2	0.1	mg/L	U	0.2	Highland	2011
APW Bulk	1,2-Dichloroethane	180-1968-1	0.2	0.1	mg/L	U	0.2	El Monte	2011
APW	1,2-Dichloroethane	180-12869-1	0.2	0.1	mg/L	U	0.2	Los Angeles	2012
APW	1,2-Dichloroethane	180-13030-1	0.2	0.1	mg/L	U	0.2	Highland	2012
APW	1,2-Dichloroethane	180-13997-1	0.2	0.1	mg/L	U	0.2	Highland	2012
APW	1,2-Dichloroethane	180-12870-1	0.2	0.1	mg/L	U	0.2	Fresno	2012
APW	1,2-Dichloroethane	180-11964-1	0.2	0.1	mg/L	U	0.2	Sacramento	2012
Aqueous IC	1,2-Dichloroethane	180-11264-1	0.2	0.1	mg/L	U	0.2	Santa Ana	2012
Aqueous IC	1,2-Dichloroethane	180-11971-1	0.2	0.1	mg/L	U	0.2	Sacramento	2012
APW	1,2-Dichloroethane	180-23542-1	0.2	0.1	mg/L	U	0.2	Fresno	2013
APW	1,2-Dichloroethane	180-23543-1	0.2	0.1	mg/L	U	0.2	Highland	2013
APW	1,2-Dichloroethane	180-23540-1	0.2	0.1	mg/L	U	0.2	Los Angeles	2013
APW	1,2-Dichloroethane	180-25501-1	0.2	0.1	mg/L	U	0.2	Sacramento	2013
APW Bulk Tank	1,2-Dichloroethane	180-35276-1	0.2	0.1	mg/L	U	0.2	Highland	2014
APW Bulk Tank	1,2-Dichloroethane	180-35141-1	0.2	0.1	mg/L	U	0.2	Los Angeles	2014
Aqueous IC	1,2-Dichloroethane	180-35277-1	0.2	0.1	mg/L	U	0.2	Los Angeles	2014
APW	1,2-Dichloroethane	180-35960-2	0.2	0.1	mg/L	U	0.2	Sacramento	2014
APW	1,2-Dichloroethane	180-38298-1	0.2	0.1	mg/L	U	0.2	Boise	2014
APW	1,2-Dichloroethane	180-39595-1	0.2	0.1	mg/L	U	0.2	Fresno	2014

APW	1,2-Dichloroethane	180-42909-1	0.2	0.1	mg/L	U	0.2			Boise	2015
APW	1,2-Dichloroethane	180-49157-1	0.2	0.1	mg/L	U	0.2			Sacramento	2015
Aqueous IC	1,2-Dichloroethane	180-42424-1	0.2	0.1	mg/L	U	0.2			Chandler	2015
Aqueous IC	1,2-Dichloroethane	180-46921-1	0.2	0.1	mg/L	U	0.2			Los Angeles	2015
APW Bulk	1,2-Dichloroethane	180-47817-1	0.2	0.1	mg/L	U	0.2			Highland	2015
APW Bulk	1,2-Dichloroethane	180-46604-1	0.2	0.1	mg/L	U	0.2			Los Angeles	2015
APW	1,2-Dichloroethane	180-52260-1	0.2	0.1	mg/L	U	0.2			Santa Ana	2015
APW Bulk Tank	1,2-Dichloroethane	180-49517-1	0.2	0.1	mg/L	U	0.2			Fresno	2015
APW	1,2-Dichloroethane	180-52525-1	0.2	0.1	mg/L	U	0.2			Boise	2016
APW	1,2-Dichloroethane	180-57948-2	0.2	0.1	mg/L	U	0.2			Los Angeles	2016
APW	1,2-Dichloroethane	180-58632-1	0.2	0.1	mg/L	U	0.2			Sacramento	2016
APW	1,2-Dichloroethane	180-58151-1	0.2	0.1	mg/L	U	0.2			Santa Ana	2016
Aqueous IC	1,2-Dichloroethane	180-57955-1	0.2	0.1	mg/L	U	0.2			Los Angeles	2016
Aqueous IC	1,2-Dichloroethane	180-58633-1	0.2	0.1	mg/L	U	0.2			Sacramento	2016
APW Bulk Tank	1,2-Dichloroethane	180-58407-1	0.2	0.1	mg/L	U	0.2			Fresno	2016
APW Bulk Tank	1,2-Dichloroethane	180-58654-1	0.2	0.1	mg/L	U	0.2			Highland	2016
APW Bulk Tank	1,2-Dichloroethane	180-57950-2	0.2	0.1	mg/L	U	0.2			Los Angeles	2016
APW Bulk Tank	1,2-Dichloroethane	180-58626-1	0.2	0.1	mg/L	U	0.2			Sacramento	2016
APW Bulk Tank	1,2-Dichloroethane	180-58156-1	0.2	0.1	mg/L	U	0.2			Santa Ana	2016
APW	1,2-Dichloroethane	180-66778-1	0.2	0.1	mg/L	U	0.2			Boise	2017
APW	1,2-Dichloroethane	180-68411-1	0.2	0.1	mg/L	U	0.2			Los Angeles	2017
APW	1,2-Dichloroethane	180-70635-1	0.2	0.1	mg/L	U	0.2			Salisbury	2017
APW	1,2-Dichloroethane	180-67799-1	0.2	0.1	mg/L	U	0.2			Santa Ana	2017
APW	1,2-Dichloroethane	180-64793-1	0.2	0.1	mg/L	U	0.2	47	78	Wichita	2017
APW	1,2-Dichloroethane	180-70452-1	0.2	0.1	mg/L	U	0.2			Sacramento	2017
APW Bulk Tank	1,2-Dichloroethane	180-68412-1	0.2	0.1	mg/L	U	0.2			Los Angeles	2017
APW Bulk Tank	1,2-Dichloroethane	180-70449-1	0.2	0.1	mg/L	U	0.2			Sacramento	2017
Aqueous IC	1,2-Dichloroethane	180-67798-1	0.2	0.1	mg/L	U	0.2			Santa Ana	2017
APW	1,2-Dichloroethane	180-77402-1	0.2	0.1	mg/L	U	0.2			Boise	2018
APW	1,2-Dichloroethane	180-76916-1	0.2	0.1	mg/L	U	0.2			Chandler	2018
APW	1,2-Dichloroethane	180-82402-1	0.2	0.1	mg/L	U	0.2			Clackamas	2018
APW	1,2-Dichloroethane	180-79848-1	0.2	0.1	mg/L	U	0.2			Los Angeles	2018
APW	1,2-Dichloroethane	180-79774-1	0.2	0.1	mg/L	U	0.2			Oklahoma City	2018
APW	1,2-Dichloroethane	180-81361-1	0.2	0.1	mg/L	U F2 F1	0.2			Salisbury	2018

APW	1,2-Dichloroethane	180-76918-1	0.2	0.1	mg/L	U	0.2	Salt Lake City	2018
APW	1,2-Dichloroethane	180-78618-1	0.2	0.1	mg/L	U	0.2	Santa Ana	2018
APW	1,2-Dichloroethane	180-76205-1	0.2	0.1	mg/L	U	0.2	Wichita	2018
APW Bulk Tank	1,2-Dichloroethane	180-79850-2	0.2	0.1	mg/L	U	0.2	Los Angeles	2018
APW Bulk Tank	1,2-Dichloroethane	180-78615-1	0.2	0.1	mg/L	U	0.2	Santa Ana	2018
APW Bulk Tank	1,2-Dichloroethane	180-71593-1	0.2	0.1	mg/L	U	0.2	Santa Ana	2018
Aqueous IC	1,2-Dichloroethane	180-80856-1	0.2	0.1	mg/L	U	0.2	Sacramento	2018
Aqueous IC	1,2-Dichloroethane	180-82080-2	0.2	0.1	mg/L	U	0.2	Santa Ana	2018
Aqueous IC	1,2-Dichloroethane	180-23587-1	0.25	0.125	mg/L	U	0.25	Highland	2013
APW	1,2-Dichloroethane	180-64610-1	0.13	0.1	mg/L	J	0.2	Chandler	2017
Aqueous IC	1,2-Dichloroethane	180-1133-2	0.5	0.25	mg/L	U	0.5	Sacramento	2011
Aqueous IC	1,2-Dichloroethane	180-1863-2	0.5	0.25	mg/L	U	0.5	Santa Ana	2011
Aqueous IC	1,2-Dichloroethane	180-1930-2	0.5	0.25	mg/L	U	0.5	Los Angeles	2011
Aqueous IC	1,2-Dichloroethane	180-1963-1	0.5	0.25	mg/L	U	0.5	Highland	2011
Aqueous IC	1,2-Dichloroethane	180-23567-1	0.5	0.25	mg/L	U	0.5	Los Angeles	2013
APW Bulk Tank	1,2-Dichloroethane	180-25297-1	0.5	0.25	mg/L	U	0.5	El Monte	2013
APW Bulk Tank	1,2-Dichloroethane	180-34895-1	0.5	0.25	mg/L	U	0.5	Santa Ana	2014
Aqueous IC	1,2-Dichloroethane	180-34938-2	0.5	0.25	mg/L	U	0.5	Santa Ana	2014
Aqueous IC	1,2-Dichloroethane	180-52258-1	0.5	0.25	mg/L	U	0.5	Santa Ana	2015
APW	1,2-Dichloroethane	180-80854-1	4	2	mg/L	U	4	Sacramento	2018
Aqueous IC	1,2-Dichloroethane	180-25755-1	40	20	mg/L	U	40	Santa Ana	2013
APW	1,4-Dichlorobenzene	180-1123-1	0.2	0.1	mg/L	U	0.2	Sacramento	2011
APW	1,4-Dichlorobenzene	180-1933-1	0.2	0.1	mg/L	U	0.2	Los Angeles	2011
APW	1,4-Dichlorobenzene	180-1862-1	0.2	0.1	mg/L	U	0.2	Santa Ana	2011
APW	1,4-Dichlorobenzene	180-1957-1	0.2	0.1	mg/L	U	0.2	Fresno	2011
APW	1,4-Dichlorobenzene	180-1961-1	0.2	0.1	mg/L	U	0.2	Highland	2011
APW Bulk	1,4-Dichlorobenzene	180-1968-1	0.2	0.1	mg/L	U	0.2	El Monte	2011
APW	1,4-Dichlorobenzene	180-23542-1	0.2	0.1	mg/L	U	0.2	Fresno	2013
APW	1,4-Dichlorobenzene	180-23543-1	0.2	0.1	mg/L	U	0.2	Highland	2013
APW	1,4-Dichlorobenzene	180-23540-1	0.2	0.1	mg/L	U	0.2	Los Angeles	2013
APW	1,4-Dichlorobenzene	180-25501-1	0.2	0.1	mg/L	U	0.2	Sacramento	2013
APW Bulk Tank	1,4-Dichlorobenzene	180-35276-1	0.2	0.1	mg/L	U	0.2	Highland	2014
APW Bulk Tank	1,4-Dichlorobenzene	180-35141-1	0.2	0.1	mg/L	U	0.2	Los Angeles	2014
Aqueous IC	1,4-Dichlorobenzene	180-35277-1	0.2	0.1	mg/L	U	0.2	Los Angeles	2014

APW	1,4-Dichlorobenzene	180-35960-2	0.2	0.1	mg/L	U	0.2			Sacramento	2014
APW	1,4-Dichlorobenzene	180-38298-1	0.2	0.1	mg/L	U	0.2			Boise	2014
APW	1,4-Dichlorobenzene	180-39595-1	0.2	0.1	mg/L	U	0.2			Fresno	2014
APW	1,4-Dichlorobenzene	180-42909-1	0.2	0.1	mg/L	U	0.2			Boise	2015
APW	1,4-Dichlorobenzene	180-49157-1	0.2	0.1	mg/L	U	0.2			Sacramento	2015
Aqueous IC	1,4-Dichlorobenzene	180-42424-1	0.2	0.1	mg/L	U	0.2			Chandler	2015
Aqueous IC	1,4-Dichlorobenzene	180-46921-1	0.2	0.1	mg/L	U	0.2			Los Angeles	2015
APW Bulk	1,4-Dichlorobenzene	180-47817-1	0.2	0.1	mg/L	U	0.2			Highland	2015
APW Bulk	1,4-Dichlorobenzene	180-46604-1	0.2	0.1	mg/L	U	0.2			Los Angeles	2015
APW	1,4-Dichlorobenzene	180-52260-1	0.2	0.1	mg/L	U	0.2			Santa Ana	2015
APW Bulk Tank	1,4-Dichlorobenzene	180-49517-1	0.2	0.1	mg/L	U	0.2			Fresno	2015
APW	1,4-Dichlorobenzene	180-52525-1	0.2	0.1	mg/L	U	0.2			Boise	2016
APW	1,4-Dichlorobenzene	180-57948-2	0.2	0.1	mg/L	U	0.2			Los Angeles	2016
APW	1,4-Dichlorobenzene	180-58632-1	0.2	0.1	mg/L	U	0.2			Sacramento	2016
APW	1,4-Dichlorobenzene	180-58151-1	0.2	0.1	mg/L	U	0.2			Santa Ana	2016
Aqueous IC	1,4-Dichlorobenzene	180-57955-1	0.2	0.1	mg/L	U	0.2			Los Angeles	2016
Aqueous IC	1,4-Dichlorobenzene	180-58633-1	0.2	0.1	mg/L	U	0.2			Sacramento	2016
APW Bulk Tank	1,4-Dichlorobenzene	180-58407-1	0.2	0.1	mg/L	U	0.2			Fresno	2016
APW Bulk Tank	1,4-Dichlorobenzene	180-58654-1	0.2	0.1	mg/L	U	0.2			Highland	2016
APW Bulk Tank	1,4-Dichlorobenzene	180-57950-2	0.2	0.1	mg/L	U	0.2			Los Angeles	2016
APW Bulk Tank	1,4-Dichlorobenzene	180-58626-1	0.2	0.1	mg/L	U	0.2			Sacramento	2016
APW Bulk Tank	1,4-Dichlorobenzene	180-58156-1	0.2	0.1	mg/L	U	0.2			Santa Ana	2016
APW	1,4-Dichlorobenzene	180-66778-1	0.2	0.1	mg/L	U	0.2			Boise	2017
APW	1,4-Dichlorobenzene	180-64610-1	0.2	0.1	mg/L	U	0.2			Chandler	2017
APW	1,4-Dichlorobenzene	180-68411-1	0.2	0.1	mg/L	U	0.2			Los Angeles	2017
APW	1,4-Dichlorobenzene	180-70635-1	0.2	0.1	mg/L	U	0.2			Salisbury	2017
APW	1,4-Dichlorobenzene	180-67799-1	0.2	0.1	mg/L	U	0.2			Santa Ana	2017
APW	1,4-Dichlorobenzene	180-64793-1	0.2	0.1	mg/L	U	0.2			Wichita	2017
APW	1,4-Dichlorobenzene	180-70452-1	0.2	0.1	mg/L	U	0.2			Sacramento	2017
APW Bulk Tank	1,4-Dichlorobenzene	180-68412-1	0.2	0.1	mg/L	U	0.2	43	71	Los Angeles	2017
APW Bulk Tank	1,4-Dichlorobenzene	180-70449-1	0.2	0.1	mg/L	U	0.2			Sacramento	2017
Aqueous IC	1,4-Dichlorobenzene	180-67798-1	0.2	0.1	mg/L	U	0.2			Santa Ana	2017
APW	1,4-Dichlorobenzene	180-77402-1	0.2	0.1	mg/L	U	0.2			Boise	2018
APW	1,4-Dichlorobenzene	180-76916-1	0.2	0.1	mg/L	U	0.2			Chandler	2018

APW	1,4-Dichlorobenzene	180-82402-1	0.2	0.1	mg/L	U	0.2	Clackamas	2018
APW	1,4-Dichlorobenzene	180-79848-1	0.2	0.1	mg/L	U	0.2	Los Angeles	2018
APW	1,4-Dichlorobenzene	180-79774-1	0.2	0.1	mg/L	U	0.2	Oklahoma City	2018
APW	1,4-Dichlorobenzene	180-81361-1	0.2	0.1	mg/L	U F2	0.2	Salisbury	2018
APW	1,4-Dichlorobenzene	180-76918-1	0.2	0.1	mg/L	U	0.2	Salt Lake City	2018
APW	1,4-Dichlorobenzene	180-78618-1	0.2	0.1	mg/L	U	0.2	Santa Ana	2018
APW	1,4-Dichlorobenzene	180-76205-1	0.2	0.1	mg/L	U	0.2	Wichita	2018
APW Bulk Tank	1,4-Dichlorobenzene	180-79850-2	0.2	0.1	mg/L	U	0.2	Los Angeles	2018
APW Bulk Tank	1,4-Dichlorobenzene	180-78615-1	0.2	0.1	mg/L	U	0.2	Santa Ana	2018
APW Bulk Tank	1,4-Dichlorobenzene	180-71593-1	0.2	0.1	mg/L	U	0.2	Santa Ana	2018
Aqueous IC	1,4-Dichlorobenzene	180-80856-1	0.2	0.1	mg/L	U	0.2	Sacramento	2018
Aqueous IC	1,4-Dichlorobenzene	180-82080-2	0.2	0.1	mg/L	U	0.2	Santa Ana	2018
Aqueous IC	1,4-Dichlorobenzene	180-23587-1	0.25	0.125	mg/L	U	0.25	Highland	2013
Aqueous IC	1,4-Dichlorobenzene	180-1133-2	0.5	0.25	mg/L	U	0.5	Sacramento	2011
Aqueous IC	1,4-Dichlorobenzene	180-1863-2	0.5	0.25	mg/L	U	0.5	Santa Ana	2011
Aqueous IC	1,4-Dichlorobenzene	180-1930-2	0.5	0.25	mg/L	U	0.5	Los Angeles	2011
Aqueous IC	1,4-Dichlorobenzene	180-1963-1	0.5	0.25	mg/L	U	0.5	Highland	2011
Aqueous IC	1,4-Dichlorobenzene	180-23567-1	0.5	0.25	mg/L	U	0.5	Los Angeles	2013
APW Bulk Tank	1,4-Dichlorobenzene	180-25297-1	0.5	0.25	mg/L	U	0.5	El Monte	2013
APW Bulk Tank	1,4-Dichlorobenzene	180-34895-1	0.5	0.25	mg/L	U	0.5	Santa Ana	2014
Aqueous IC	1,4-Dichlorobenzene	180-34938-2	0.5	0.25	mg/L	U	0.5	Santa Ana	2014
Aqueous IC	1,4-Dichlorobenzene	180-52258-1	0.5	0.25	mg/L	U	0.5	Santa Ana	2015
APW	1,4-Dichlorobenzene	180-80854-1	4	2	mg/L	U	4	Sacramento	2018
Aqueous IC	1,4-Dichlorobenzene	180-25755-1	40	20	mg/L	U	40	Santa Ana	2013
APW Bulk Tank	2,4,5-Trichlorophenol	180-35141-1	0.05	0.025	mg/L	U	0.05	Los Angeles	2014
APW	2,4,5-Trichlorophenol	180-35960-2	0.05	0.025	mg/L	U	0.05	Sacramento	2014
APW	2,4,5-Trichlorophenol	180-38298-1	0.05	0.025	mg/L	U	0.05	Boise	2014
APW	2,4,5-Trichlorophenol	180-39595-1	0.05	0.025	mg/L	U	0.05	Fresno	2014
APW	2,4,5-Trichlorophenol	180-49157-1	0.05	0.025	mg/L	U	0.05	Sacramento	2015
APW Bulk	2,4,5-Trichlorophenol	180-47817-1	0.05	0.025	mg/L	U	0.05	Highland	2015
APW	2,4,5-Trichlorophenol	180-52260-1	0.05	0.025	mg/L	U	0.05	Santa Ana	2015
APW Bulk Tank	2,4,5-Trichlorophenol	180-49517-1	0.05	0.025	mg/L	U	0.05	Fresno	2015
APW	2,4,5-Trichlorophenol	180-52525-1	0.05	0.025	mg/L	U	0.05	Boise	2016
APW	2,4,5-Trichlorophenol	180-57948-2	0.05	0.025	mg/L	U	0.05	Los Angeles	2016

APW	2,4,5-Trichlorophenol	180-58632-1	0.05	0.025	mg/L	U	0.05			Sacramento	2016
Aqueous IC	2,4,5-Trichlorophenol	180-57955-1	0.05	0.025	mg/L	U	0.05			Los Angeles	2016
Aqueous IC	2,4,5-Trichlorophenol	180-58633-1	0.05	0.025	mg/L	U	0.05			Sacramento	2016
APW Bulk Tank	2,4,5-Trichlorophenol	180-58407-1	0.05	0.025	mg/L	U	0.05			Fresno	2016
APW Bulk Tank	2,4,5-Trichlorophenol	180-58654-1	0.05	0.025	mg/L	U	0.05			Highland	2016
APW Bulk Tank	2,4,5-Trichlorophenol	180-57950-2	0.05	0.025	mg/L	U	0.05			Los Angeles	2016
APW Bulk Tank	2,4,5-Trichlorophenol	180-58626-1	0.05	0.025	mg/L	U	0.05			Sacramento	2016
APW Bulk Tank	2,4,5-Trichlorophenol	180-58156-1	0.05	0.025	mg/L	U	0.05			Santa Ana	2016
APW	2,4,5-Trichlorophenol	180-66778-1	0.05	0.025	mg/L	U	0.05			Boise	2017
APW	2,4,5-Trichlorophenol	180-64610-1	0.05	0.025	mg/L	U	0.05			Chandler	2017
APW	2,4,5-Trichlorophenol	180-68411-1	0.05	0.025	mg/L	U	0.05			Los Angeles	2017
APW	2,4,5-Trichlorophenol	180-70635-1	0.05	0.025	mg/L	U	0.05			Salisbury	2017
APW	2,4,5-Trichlorophenol	180-67799-1	0.05	0.025	mg/L	U	0.05			Santa Ana	2017
APW	2,4,5-Trichlorophenol	180-64793-1	0.05	0.025	mg/L	U *	0.05			Wichita	2017
APW	2,4,5-Trichlorophenol	180-70452-1	0.05	0.025	mg/L	U	0.05			Sacramento	2017
APW Bulk Tank	2,4,5-Trichlorophenol	180-68412-1	0.05	0.025	mg/L	U	0.05			Los Angeles	2017
APW Bulk Tank	2,4,5-Trichlorophenol	180-70449-1	0.05	0.025	mg/L	U	0.05			Sacramento	2017
Aqueous IC	2,4,5-Trichlorophenol	180-67798-1	0.05	0.025	mg/L	U	0.05			Santa Ana	2017
APW	2,4,5-Trichlorophenol	180-77402-1	0.05	0.025	mg/L	U	0.05			Boise	2018
APW	2,4,5-Trichlorophenol	180-76916-1	0.05	0.025	mg/L	U	0.05			Chandler	2018
APW	2,4,5-Trichlorophenol	180-82402-1	0.05	0.025	mg/L	U	0.05			Clackamas	2018
APW	2,4,5-Trichlorophenol	180-79848-1	0.05	0.025	mg/L	U	0.05			Los Angeles	2018
APW	2,4,5-Trichlorophenol	180-79774-1	0.05	0.025	mg/L	U	0.05	33	53	Oklahoma City	2018
APW	2,4,5-Trichlorophenol	180-80854-1	0.05	0.025	mg/L	U	0.05			Sacramento	2018
APW	2,4,5-Trichlorophenol	180-81361-1	0.05	0.025	mg/L	U	0.05			Salisbury	2018
APW	2,4,5-Trichlorophenol	180-78618-1	0.05	0.025	mg/L	U	0.05			Santa Ana	2018
APW	2,4,5-Trichlorophenol	180-76205-1	0.05	0.025	mg/L	U	0.05			Wichita	2018
APW Bulk Tank	2,4,5-Trichlorophenol	180-79850-2	0.05	0.025	mg/L	U	0.05			Los Angeles	2018
APW Bulk Tank	2,4,5-Trichlorophenol	180-78615-1	0.05	0.025	mg/L	U	0.05			Santa Ana	2018
APW Bulk Tank	2,4,5-Trichlorophenol	180-71593-1	0.05	0.025	mg/L	U	0.05			Santa Ana	2018
Aqueous IC	2,4,5-Trichlorophenol	180-80856-1	0.05	0.025	mg/L	U	0.05			Sacramento	2018
Aqueous IC	2,4,5-Trichlorophenol	180-82080-2	0.05	0.025	mg/L	U	0.05			Santa Ana	2018
APW Bulk Tank	2,4,5-Trichlorophenol	180-34895-1	0.13	0.065	mg/L	U	0.13			Santa Ana	2014
APW	2,4,5-Trichlorophenol	180-76918-1	0.2	0.1	mg/L	U	0.2			Salt Lake City	2018

Aqueous IC	2,4,5-Trichlorophenol	180-35277-1	0.25	0.125	mg/L	U	0.25	Los Angeles	2014
APW	2,4,5-Trichlorophenol	180-42909-1	0.25	0.125	mg/L	U *	0.25	Boise	2015
Aqueous IC	2,4,5-Trichlorophenol	180-42424-1	0.33	0.165	mg/L	U	0.33	Chandler	2015
APW Bulk Tank	2,4,5-Trichlorophenol	180-35276-1	0.5	0.25	mg/L	U	0.5	Highland	2014
Aqueous IC	2,4,5-Trichlorophenol	180-46921-1	0.5	0.25	mg/L	U	0.5	Los Angeles	2015
APW	2,4,5-Trichlorophenol	180-58151-1	1.3	0.65	mg/L	U	1.3	Santa Ana	2016
Aqueous IC	2,4,5-Trichlorophenol	180-34938-2	2	1	mg/L	U	2	Santa Ana	2014
Aqueous IC	2,4,5-Trichlorophenol	180-52258-1	2	1	mg/L	U	2	Santa Ana	2015
Aqueous IC	2,4,5-Trichlorophenol	180-1863-1	100	50	mg/L	U	100	Santa Ana	2011
APW Bulk Tank	2,4,6-Trichlorophenol	180-35141-1	0.05	0.025	mg/L	U	0.05	Los Angeles	2014
APW	2,4,6-Trichlorophenol	180-35960-2	0.05	0.025	mg/L	U	0.05	Sacramento	2014
APW	2,4,6-Trichlorophenol	180-38298-1	0.05	0.025	mg/L	U	0.05	Boise	2014
APW	2,4,6-Trichlorophenol	180-39595-1	0.05	0.025	mg/L	U	0.05	Fresno	2014
APW	2,4,6-Trichlorophenol	180-49157-1	0.05	0.025	mg/L	U	0.05	Sacramento	2015
APW Bulk	2,4,6-Trichlorophenol	180-47817-1	0.05	0.025	mg/L	U	0.05	Highland	2015
APW	2,4,6-Trichlorophenol	180-52260-1	0.05	0.025	mg/L	U	0.05	Santa Ana	2015
APW Bulk Tank	2,4,6-Trichlorophenol	180-49517-1	0.05	0.025	mg/L	U	0.05	Fresno	2015
APW	2,4,6-Trichlorophenol	180-52525-1	0.05	0.025	mg/L	U	0.05	Boise	2016
APW	2,4,6-Trichlorophenol	180-57948-2	0.05	0.025	mg/L	U	0.05	Los Angeles	2016
APW	2,4,6-Trichlorophenol	180-58632-1	0.05	0.025	mg/L	U	0.05	Sacramento	2016
Aqueous IC	2,4,6-Trichlorophenol	180-57955-1	0.05	0.025	mg/L	U	0.05	Los Angeles	2016
Aqueous IC	2,4,6-Trichlorophenol	180-58633-1	0.05	0.025	mg/L	U	0.05	Sacramento	2016
APW Bulk Tank	2,4,6-Trichlorophenol	180-58407-1	0.05	0.025	mg/L	U	0.05	Fresno	2016
APW Bulk Tank	2,4,6-Trichlorophenol	180-58654-1	0.05	0.025	mg/L	U	0.05	Highland	2016
APW Bulk Tank	2,4,6-Trichlorophenol	180-57950-2	0.05	0.025	mg/L	U	0.05	Los Angeles	2016
APW Bulk Tank	2,4,6-Trichlorophenol	180-58626-1	0.05	0.025	mg/L	U	0.05	Sacramento	2016
APW Bulk Tank	2,4,6-Trichlorophenol	180-58156-1	0.05	0.025	mg/L	U	0.05	Santa Ana	2016
APW	2,4,6-Trichlorophenol	180-66778-1	0.05	0.025	mg/L	U	0.05	Boise	2017
APW	2,4,6-Trichlorophenol	180-64610-1	0.05	0.025	mg/L	U	0.05	Chandler	2017
APW	2,4,6-Trichlorophenol	180-68411-1	0.05	0.025	mg/L	U	0.05	Los Angeles	2017
APW	2,4,6-Trichlorophenol	180-70635-1	0.05	0.025	mg/L	U	0.05	Salisbury	2017
APW	2,4,6-Trichlorophenol	180-67799-1	0.05	0.025	mg/L	U	0.05	Santa Ana	2017
APW	2,4,6-Trichlorophenol	180-64793-1	0.05	0.025	mg/L	U *	0.05	Wichita	2017
APW	2,4,6-Trichlorophenol	180-70452-1	0.05	0.025	mg/L	U	0.05	Sacramento	2017

APW Bulk Tank	2,4,6-Trichlorophenol	180-68412-1	0.05	0.025	mg/L	U	0.05			Los Angeles	2017
APW Bulk Tank	2,4,6-Trichlorophenol	180-70449-1	0.05	0.025	mg/L	U	0.05			Sacramento	2017
Aqueous IC	2,4,6-Trichlorophenol	180-67798-1	0.05	0.025	mg/L	U	0.05			Santa Ana	2017
APW	2,4,6-Trichlorophenol	180-77402-1	0.05	0.025	mg/L	U	0.05			Boise	2018
APW	2,4,6-Trichlorophenol	180-76916-1	0.05	0.025	mg/L	U	0.05			Chandler	2018
APW	2,4,6-Trichlorophenol	180-82402-1	0.05	0.025	mg/L	U	0.05			Clackamas	2018
APW	2,4,6-Trichlorophenol	180-79848-1	0.05	0.025	mg/L	U	0.05			Los Angeles	2018
APW	2,4,6-Trichlorophenol	180-79774-1	0.05	0.025	mg/L	U	0.05	33	53	Oklahoma City	2018
APW	2,4,6-Trichlorophenol	180-80854-1	0.05	0.025	mg/L	U	0.05			Sacramento	2018
APW	2,4,6-Trichlorophenol	180-81361-1	0.05	0.025	mg/L	U	0.05			Salisbury	2018
APW	2,4,6-Trichlorophenol	180-78618-1	0.05	0.025	mg/L	U	0.05			Santa Ana	2018
APW	2,4,6-Trichlorophenol	180-76205-1	0.05	0.025	mg/L	U	0.05			Wichita	2018
APW Bulk Tank	2,4,6-Trichlorophenol	180-79850-2	0.05	0.025	mg/L	U	0.05			Los Angeles	2018
APW Bulk Tank	2,4,6-Trichlorophenol	180-78615-1	0.05	0.025	mg/L	U	0.05			Santa Ana	2018
APW Bulk Tank	2,4,6-Trichlorophenol	180-71593-1	0.05	0.025	mg/L	U	0.05			Santa Ana	2018
Aqueous IC	2,4,6-Trichlorophenol	180-80856-1	0.05	0.025	mg/L	U	0.05			Sacramento	2018
Aqueous IC	2,4,6-Trichlorophenol	180-82080-2	0.05	0.025	mg/L	U	0.05			Santa Ana	2018
APW Bulk Tank	2,4,6-Trichlorophenol	180-34895-1	0.13	0.065	mg/L	U	0.13			Santa Ana	2014
APW	2,4,6-Trichlorophenol	180-76918-1	0.2	0.1	mg/L	U	0.2			Salt Lake City	2018
Aqueous IC	2,4,6-Trichlorophenol	180-35277-1	0.25	0.125	mg/L	U	0.25			Los Angeles	2014
APW	2,4,6-Trichlorophenol	180-42909-1	0.25	0.125	mg/L	U *	0.25			Boise	2015
Aqueous IC	2,4,6-Trichlorophenol	180-42424-1	0.33	0.165	mg/L	U	0.33			Chandler	2015
APW Bulk Tank	2,4,6-Trichlorophenol	180-35276-1	0.5	0.25	mg/L	U	0.5			Highland	2014
Aqueous IC	2,4,6-Trichlorophenol	180-46921-1	0.5	0.25	mg/L	U	0.5			Los Angeles	2015
APW	2,4,6-Trichlorophenol	180-58151-1	1.3	0.65	mg/L	U	1.3			Santa Ana	2016
Aqueous IC	2,4,6-Trichlorophenol	180-34938-2	2	1	mg/L	U	2			Santa Ana	2014
Aqueous IC	2,4,6-Trichlorophenol	180-52258-1	2	1	mg/L	U	2			Santa Ana	2015
Aqueous IC	2,4,6-Trichlorophenol	180-1863-1	100	50	mg/L	U	100			Santa Ana	2011
APW Bulk Tank	2,4-Dinitrotoluene	180-35141-1	0.05	0.025	mg/L	U	0.05			Los Angeles	2014
APW	2,4-Dinitrotoluene	180-35960-2	0.05	0.025	mg/L	U	0.05			Sacramento	2014
APW	2,4-Dinitrotoluene	180-38298-1	0.05	0.025	mg/L	U	0.05			Boise	2014
APW	2,4-Dinitrotoluene	180-39595-1	0.05	0.025	mg/L	U	0.05			Fresno	2014
APW	2,4-Dinitrotoluene	180-49157-1	0.05	0.025	mg/L	U	0.05			Sacramento	2015
APW Bulk	2,4-Dinitrotoluene	180-47817-1	0.05	0.025	mg/L	U	0.05			Highland	2015

APW	2,4-Dinitrotoluene	180-52260-1	0.05	0.025	mg/L	U	0.05			Santa Ana	2015
APW Bulk Tank	2,4-Dinitrotoluene	180-49517-1	0.05	0.025	mg/L	U	0.05			Fresno	2015
APW	2,4-Dinitrotoluene	180-52525-1	0.05	0.025	mg/L	U	0.05			Boise	2016
APW	2,4-Dinitrotoluene	180-57948-2	0.05	0.025	mg/L	U	0.05			Los Angeles	2016
APW	2,4-Dinitrotoluene	180-58632-1	0.05	0.025	mg/L	U	0.05			Sacramento	2016
Aqueous IC	2,4-Dinitrotoluene	180-57955-1	0.05	0.025	mg/L	U	0.05			Los Angeles	2016
Aqueous IC	2,4-Dinitrotoluene	180-58633-1	0.05	0.025	mg/L	U	0.05			Sacramento	2016
APW Bulk Tank	2,4-Dinitrotoluene	180-58407-1	0.05	0.025	mg/L	U	0.05			Fresno	2016
APW Bulk Tank	2,4-Dinitrotoluene	180-58654-1	0.05	0.025	mg/L	U	0.05			Highland	2016
APW Bulk Tank	2,4-Dinitrotoluene	180-57950-2	0.05	0.025	mg/L	U	0.05			Los Angeles	2016
APW Bulk Tank	2,4-Dinitrotoluene	180-58626-1	0.05	0.025	mg/L	U	0.05			Sacramento	2016
APW Bulk Tank	2,4-Dinitrotoluene	180-58156-1	0.05	0.025	mg/L	U	0.05			Santa Ana	2016
APW	2,4-Dinitrotoluene	180-66778-1	0.05	0.025	mg/L	U	0.05			Boise	2017
APW	2,4-Dinitrotoluene	180-64610-1	0.05	0.025	mg/L	U	0.05			Chandler	2017
APW	2,4-Dinitrotoluene	180-68411-1	0.05	0.025	mg/L	U	0.05			Los Angeles	2017
APW	2,4-Dinitrotoluene	180-70635-1	0.05	0.025	mg/L	U	0.05			Salisbury	2017
APW	2,4-Dinitrotoluene	180-67799-1	0.05	0.025	mg/L	U	0.05			Santa Ana	2017
APW	2,4-Dinitrotoluene	180-64793-1	0.05	0.025	mg/L	U *	0.05			Wichita	2017
APW	2,4-Dinitrotoluene	180-70452-1	0.05	0.025	mg/L	U	0.05			Sacramento	2017
APW Bulk Tank	2,4-Dinitrotoluene	180-68412-1	0.05	0.025	mg/L	U	0.05			Los Angeles	2017
APW Bulk Tank	2,4-Dinitrotoluene	180-70449-1	0.05	0.025	mg/L	U	0.05			Sacramento	2017
Aqueous IC	2,4-Dinitrotoluene	180-67798-1	0.05	0.025	mg/L	U	0.05			Santa Ana	2017
APW	2,4-Dinitrotoluene	180-77402-1	0.05	0.025	mg/L	U	0.05			Boise	2018
APW	2,4-Dinitrotoluene	180-76916-1	0.05	0.025	mg/L	U	0.05			Chandler	2018
APW	2,4-Dinitrotoluene	180-82402-1	0.05	0.025	mg/L	U	0.05			Clackamas	2018
APW	2,4-Dinitrotoluene	180-79848-1	0.05	0.025	mg/L	U	0.05			Los Angeles	2018
APW	2,4-Dinitrotoluene	180-79774-1	0.05	0.025	mg/L	U	0.05	33	53	Oklahoma City	2018
APW	2,4-Dinitrotoluene	180-80854-1	0.05	0.025	mg/L	U	0.05			Sacramento	2018
APW	2,4-Dinitrotoluene	180-81361-1	0.05	0.025	mg/L	U	0.05			Salisbury	2018
APW	2,4-Dinitrotoluene	180-78618-1	0.05	0.025	mg/L	U	0.05			Santa Ana	2018
APW	2,4-Dinitrotoluene	180-76205-1	0.05	0.025	mg/L	U	0.05			Wichita	2018
APW Bulk Tank	2,4-Dinitrotoluene	180-79850-2	0.05	0.025	mg/L	U	0.05			Los Angeles	2018
APW Bulk Tank	2,4-Dinitrotoluene	180-78615-1	0.05	0.025	mg/L	U	0.05			Santa Ana	2018
APW Bulk Tank	2,4-Dinitrotoluene	180-71593-1	0.05	0.025	mg/L	U	0.05			Santa Ana	2018

Aqueous IC	2,4-Dinitrotoluene	180-80856-1	0.05	0.025	mg/L	U	0.05	Sacramento	2018
Aqueous IC	2,4-Dinitrotoluene	180-82080-2	0.05	0.025	mg/L	U	0.05	Santa Ana	2018
APW Bulk Tank	2,4-Dinitrotoluene	180-34895-1	0.13	0.065	mg/L	U	0.13	Santa Ana	2014
APW	2,4-Dinitrotoluene	180-76918-1	0.2	0.1	mg/L	U	0.2	Salt Lake City	2018
Aqueous IC	2,4-Dinitrotoluene	180-35277-1	0.25	0.125	mg/L	U	0.25	Los Angeles	2014
APW	2,4-Dinitrotoluene	180-42909-1	0.25	0.125	mg/L	U *	0.25	Boise	2015
Aqueous IC	2,4-Dinitrotoluene	180-42424-1	0.33	0.165	mg/L	U	0.33	Chandler	2015
APW Bulk Tank	2,4-Dinitrotoluene	180-35276-1	0.5	0.25	mg/L	U	0.5	Highland	2014
Aqueous IC	2,4-Dinitrotoluene	180-46921-1	0.5	0.25	mg/L	U	0.5	Los Angeles	2015
APW	2,4-Dinitrotoluene	180-58151-1	1.3	0.65	mg/L	U	1.3	Santa Ana	2016
Aqueous IC	2,4-Dinitrotoluene	180-34938-2	2	1	mg/L	U	2	Santa Ana	2014
Aqueous IC	2,4-Dinitrotoluene	180-52258-1	2	1	mg/L	U	2	Santa Ana	2015
Aqueous IC	2,4-Dinitrotoluene	180-1863-1	100	50	mg/L	U	100	Santa Ana	2011
APW	2-Butanone (MEK)	180-1123-1	0.2	0.1	mg/L	U	0.2	Sacramento	2011
APW	2-Butanone (MEK)	180-1933-1	0.2	0.1	mg/L	U	0.2	Los Angeles	2011
APW	2-Butanone (MEK)	180-1862-1	0.2	0.1	mg/L	U	0.2	Santa Ana	2011
APW	2-Butanone (MEK)	180-1957-1	0.2	0.1	mg/L	U	0.2	Fresno	2011
APW	2-Butanone (MEK)	180-1961-1	0.2	0.1	mg/L	U	0.2	Highland	2011
APW Bulk	2-Butanone (MEK)	180-1968-1	0.2	0.1	mg/L	U	0.2	El Monte	2011
APW	2-Butanone (MEK)	180-12869-1	0.2	0.1	mg/L	U	0.2	Los Angeles	2012
APW	2-Butanone (MEK)	180-13030-1	0.2	0.1	mg/L	U	0.2	Highland	2012
APW	2-Butanone (MEK)	180-13997-1	0.2	0.1	mg/L	U	0.2	Highland	2012
APW	2-Butanone (MEK)	180-12870-1	0.2	0.1	mg/L	U	0.2	Fresno	2012
Aqueous IC	2-Butanone (MEK)	180-11264-1	0.2	0.1	mg/L	U	0.2	Santa Ana	2012
Aqueous IC	2-Butanone (MEK)	180-11971-1	0.2	0.1	mg/L	U	0.2	Sacramento	2012
APW	2-Butanone (MEK)	180-23542-1	0.2	0.1	mg/L	U	0.2	Fresno	2013
APW	2-Butanone (MEK)	180-23543-1	0.2	0.1	mg/L	U	0.2	Highland	2013
APW	2-Butanone (MEK)	180-23540-1	0.2	0.1	mg/L	U	0.2	Los Angeles	2013
APW	2-Butanone (MEK)	180-25501-1	0.2	0.1	mg/L	U	0.2	Sacramento	2013
APW	2-Butanone (MEK)	180-38298-1	0.2	0.1	mg/L	U	0.2	Boise	2014
APW	2-Butanone (MEK)	180-39595-1	0.2	0.1	mg/L	U	0.2	Fresno	2014
APW Bulk Tank	2-Butanone (MEK)	180-35276-1	0.2	0.1	mg/L	U	0.2	Highland	2014
Aqueous IC	2-Butanone (MEK)	180-35277-1	0.2	0.1	mg/L	U	0.2	Los Angeles	2014
APW	2-Butanone (MEK)	180-35960-2	0.2	0.1	mg/L	U	0.2	Sacramento	2014

APW	2-Butanone (MEK)	180-52260-1	0.2	0.1	mg/L	U	0.2			Santa Ana	2015
APW Bulk Tank	2-Butanone (MEK)	180-49517-1	0.2	0.1	mg/L	U	0.2			Fresno	2015
APW	2-Butanone (MEK)	180-42909-1	0.2	0.1	mg/L	U	0.2			Boise	2015
APW	2-Butanone (MEK)	180-49157-1	0.2	0.1	mg/L	U	0.2			Sacramento	2015
Aqueous IC	2-Butanone (MEK)	180-42424-1	0.2	0.1	mg/L	U	0.2			Chandler	2015
Aqueous IC	2-Butanone (MEK)	180-46921-1	0.2	0.1	mg/L	U	0.2			Los Angeles	2015
APW Bulk	2-Butanone (MEK)	180-47817-1	0.2	0.1	mg/L	U	0.2			Highland	2015
APW Bulk	2-Butanone (MEK)	180-46604-1	0.2	0.1	mg/L	U	0.2			Los Angeles	2015
APW	2-Butanone (MEK)	180-52525-1	0.2	0.1	mg/L	U	0.2			Boise	2016
APW	2-Butanone (MEK)	180-57948-2	0.2	0.1	mg/L	U	0.2			Los Angeles	2016
APW	2-Butanone (MEK)	180-58632-1	0.2	0.1	mg/L	U	0.2			Sacramento	2016
APW	2-Butanone (MEK)	180-58151-1	0.2	0.1	mg/L	U	0.2			Santa Ana	2016
Aqueous IC	2-Butanone (MEK)	180-57955-1	0.2	0.1	mg/L	U	0.2			Los Angeles	2016
Aqueous IC	2-Butanone (MEK)	180-58633-1	0.2	0.1	mg/L	U	0.2			Sacramento	2016
APW Bulk Tank	2-Butanone (MEK)	180-58407-1	0.2	0.1	mg/L	U	0.2			Fresno	2016
APW Bulk Tank	2-Butanone (MEK)	180-58654-1	0.2	0.1	mg/L	U	0.2			Highland	2016
APW Bulk Tank	2-Butanone (MEK)	180-57950-2	0.2	0.1	mg/L	U	0.2			Los Angeles	2016
APW Bulk Tank	2-Butanone (MEK)	180-58626-1	0.2	0.1	mg/L	U	0.2			Sacramento	2016
APW Bulk Tank	2-Butanone (MEK)	180-58156-1	0.2	0.1	mg/L	U	0.2			Santa Ana	2016
APW	2-Butanone (MEK)	180-66778-1	0.2	0.1	mg/L	U	0.2			Boise	2017
APW	2-Butanone (MEK)	180-68411-1	0.2	0.1	mg/L	U	0.2			Los Angeles	2017
APW	2-Butanone (MEK)	180-70635-1	0.2	0.1	mg/L	U	0.2			Salisbury	2017
APW	2-Butanone (MEK)	180-67799-1	0.2	0.1	mg/L	U	0.2			Santa Ana	2017
APW	2-Butanone (MEK)	180-64793-1	0.2	0.1	mg/L	U	0.2			Wichita	2017
APW	2-Butanone (MEK)	180-70452-1	0.2	0.1	mg/L	U	0.2			Sacramento	2017
APW Bulk Tank	2-Butanone (MEK)	180-68412-1	0.2	0.1	mg/L	U	0.2	47	78	Los Angeles	2017
Aqueous IC	2-Butanone (MEK)	180-67798-1	0.2	0.1	mg/L	U	0.2			Santa Ana	2017
APW	2-Butanone (MEK)	180-77402-1	0.2	0.1	mg/L	U	0.2			Boise	2018
APW	2-Butanone (MEK)	180-76916-1	0.2	0.1	mg/L	U	0.2			Chandler	2018
APW	2-Butanone (MEK)	180-82402-1	0.2	0.1	mg/L	U	0.2			Clackamas	2018
APW	2-Butanone (MEK)	180-79774-1	0.2	0.1	mg/L	U	0.2			Oklahoma City	2018
APW	2-Butanone (MEK)	180-81361-1	0.2	0.1	mg/L	U	0.2			Salisbury	2018
APW	2-Butanone (MEK)	180-76918-1	0.2	0.1	mg/L	U	0.2			Salt Lake City	2018
APW	2-Butanone (MEK)	180-78618-1	0.2	0.1	mg/L	U	0.2			Santa Ana	2018

APW	2-Butanone (MEK)	180-76205-1	0.2	0.1	mg/L	U	0.2	Wichita	2018
APW Bulk Tank	2-Butanone (MEK)	180-79850-2	0.2	0.1	mg/L	U	0.2	Los Angeles	2018
APW Bulk Tank	2-Butanone (MEK)	180-78615-1	0.2	0.1	mg/L	U	0.2	Santa Ana	2018
APW Bulk Tank	2-Butanone (MEK)	180-71593-1	0.2	0.1	mg/L	U	0.2	Santa Ana	2018
Aqueous IC	2-Butanone (MEK)	180-80856-1	0.2	0.1	mg/L	U	0.2	Sacramento	2018
Aqueous IC	2-Butanone (MEK)	180-82080-2	0.2	0.1	mg/L	U	0.2	Santa Ana	2018
Aqueous IC	2-Butanone (MEK)	180-23587-1	0.25	0.125	mg/L	U	0.25	Highland	2013
APW	2-Butanone (MEK)	180-11964-1	0.16	0.16	mg/L	J	0.2	Sacramento	2012
APW	2-Butanone (MEK)	180-79848-1	0.21	0.21	mg/L		0.2	Los Angeles	2018
APW Bulk Tank	2-Butanone (MEK)	180-70449-1	0.25	0.25	mg/L		0.2	Sacramento	2017
Aqueous IC	2-Butanone (MEK)	180-1133-2	0.5	0.25	mg/L	U	0.5	Sacramento	2011
Aqueous IC	2-Butanone (MEK)	180-1930-2	0.5	0.25	mg/L	U	0.5	Los Angeles	2011
Aqueous IC	2-Butanone (MEK)	180-1963-1	0.5	0.25	mg/L	U	0.5	Highland	2011
Aqueous IC	2-Butanone (MEK)	180-23567-1	0.5	0.25	mg/L	U	0.5	Los Angeles	2013
APW Bulk Tank	2-Butanone (MEK)	180-25297-1	0.5	0.25	mg/L	U	0.5	El Monte	2013
APW Bulk Tank	2-Butanone (MEK)	180-34895-1	0.5	0.25	mg/L	U	0.5	Santa Ana	2014
Aqueous IC	2-Butanone (MEK)	180-34938-2	0.5	0.25	mg/L	U	0.5	Santa Ana	2014
Aqueous IC	2-Butanone (MEK)	180-52258-1	0.5	0.25	mg/L	U	0.5	Santa Ana	2015
Aqueous IC	2-Butanone (MEK)	180-1863-2	0.71	0.71	mg/L		0.5	Santa Ana	2011
APW	2-Butanone (MEK)	180-64610-1	1.6	1.6	mg/L		0.2	Chandler	2017
APW Bulk Tank	2-Butanone (MEK)	180-35141-1	1.9	1.9	mg/L		0.2	Los Angeles	2014
APW	2-Butanone (MEK)	180-80854-1	4	2	mg/L	U	4	Sacramento	2018
Aqueous IC	2-Butanone (MEK)	180-25755-1	96	96	mg/L		40	Santa Ana	2013
APW Bulk Tank	2-Methylphenol	180-35141-1	0.05	0.025	mg/L	U	0.05	Los Angeles	2014
APW	2-Methylphenol	180-35960-2	0.05	0.025	mg/L	U	0.05	Sacramento	2014
APW	2-Methylphenol	180-38298-1	0.05	0.025	mg/L	U	0.05	Boise	2014
APW	2-Methylphenol	180-39595-1	0.05	0.025	mg/L	U	0.05	Fresno	2014
APW	2-Methylphenol	180-49157-1	0.05	0.025	mg/L	U	0.05	Sacramento	2015
APW Bulk	2-Methylphenol	180-47817-1	0.05	0.025	mg/L	U	0.05	Highland	2015
APW	2-Methylphenol	180-52260-1	0.05	0.025	mg/L	U	0.05	Santa Ana	2015
APW Bulk Tank	2-Methylphenol	180-49517-1	0.05	0.025	mg/L	U	0.05	Fresno	2015
APW	2-Methylphenol	180-52525-1	0.05	0.025	mg/L	U	0.05	Boise	2016
APW	2-Methylphenol	180-57948-2	0.05	0.025	mg/L	U	0.05	Los Angeles	2016
APW	2-Methylphenol	180-58632-1	0.05	0.025	mg/L	U	0.05	Sacramento	2016

Aqueous IC	2-Methylphenol	180-57955-1	0.05	0.025	mg/L	U *	0.05			Los Angeles	2016
Aqueous IC	2-Methylphenol	180-58633-1	0.05	0.025	mg/L	U	0.05			Sacramento	2016
APW Bulk Tank	2-Methylphenol	180-58407-1	0.05	0.025	mg/L	U	0.05			Fresno	2016
APW Bulk Tank	2-Methylphenol	180-58654-1	0.05	0.025	mg/L	U	0.05			Highland	2016
APW Bulk Tank	2-Methylphenol	180-57950-2	0.05	0.025	mg/L	U	0.05			Los Angeles	2016
APW Bulk Tank	2-Methylphenol	180-58626-1	0.05	0.025	mg/L	U	0.05			Sacramento	2016
APW Bulk Tank	2-Methylphenol	180-58156-1	0.05	0.025	mg/L	U	0.05			Santa Ana	2016
APW	2-Methylphenol	180-66778-1	0.05	0.025	mg/L	U	0.05			Boise	2017
APW	2-Methylphenol	180-64610-1	0.05	0.025	mg/L	U	0.05			Chandler	2017
APW	2-Methylphenol	180-68411-1	0.05	0.025	mg/L	U	0.05			Los Angeles	2017
APW	2-Methylphenol	180-70635-1	0.05	0.025	mg/L	U	0.05			Salisbury	2017
APW	2-Methylphenol	180-67799-1	0.05	0.025	mg/L	U	0.05			Santa Ana	2017
APW	2-Methylphenol	180-70452-1	0.05	0.025	mg/L	U	0.05			Sacramento	2017
APW Bulk Tank	2-Methylphenol	180-68412-1	0.05	0.025	mg/L	U	0.05			Los Angeles	2017
APW Bulk Tank	2-Methylphenol	180-70449-1	0.05	0.025	mg/L	U	0.05			Sacramento	2017
Aqueous IC	2-Methylphenol	180-67798-1	0.05	0.025	mg/L	U	0.05			Santa Ana	2017
APW	2-Methylphenol	180-77402-1	0.05	0.025	mg/L	U	0.05			Boise	2018
APW	2-Methylphenol	180-76916-1	0.05	0.025	mg/L	U	0.05			Chandler	2018
APW	2-Methylphenol	180-82402-1	0.05	0.025	mg/L	U	0.05			Clackamas	2018
APW	2-Methylphenol	180-79848-1	0.05	0.025	mg/L	U	0.05			Los Angeles	2018
APW	2-Methylphenol	180-79774-1	0.05	0.025	mg/L	U	0.05			Oklahoma City	2018
APW	2-Methylphenol	180-80854-1	0.05	0.025	mg/L	U	0.05	33	53	Sacramento	2018
APW	2-Methylphenol	180-81361-1	0.05	0.025	mg/L	U	0.05			Salisbury	2018
APW	2-Methylphenol	180-78618-1	0.05	0.025	mg/L	U	0.05			Santa Ana	2018
APW	2-Methylphenol	180-76205-1	0.05	0.025	mg/L	U	0.05			Wichita	2018
APW Bulk Tank	2-Methylphenol	180-79850-2	0.05	0.025	mg/L	U	0.05			Los Angeles	2018
APW Bulk Tank	2-Methylphenol	180-78615-1	0.05	0.025	mg/L	U	0.05			Santa Ana	2018
APW Bulk Tank	2-Methylphenol	180-71593-1	0.05	0.025	mg/L	U	0.05			Santa Ana	2018
Aqueous IC	2-Methylphenol	180-80856-1	0.05	0.025	mg/L	U	0.05			Sacramento	2018
Aqueous IC	2-Methylphenol	180-82080-2	0.05	0.025	mg/L	U	0.05			Santa Ana	2018
APW	2-Methylphenol	180-64793-1	0.058	0.058	mg/L		0.05			Wichita	2017
APW	2-Methylphenol	180-76918-1	0.2	0.1	mg/L	U	0.2			Salt Lake City	2018
Aqueous IC	2-Methylphenol	180-35277-1	0.25	0.125	mg/L	U	0.25			Los Angeles	2014
APW	2-Methylphenol	180-42909-1	0.25	0.125	mg/L	U	0.25			Boise	2015

Aqueous IC	2-Methylphenol	180-42424-1	0.33	0.165	mg/L	U	0.33	Chandler	2015
APW Bulk Tank	2-Methylphenol	180-35276-1	0.5	0.25	mg/L	U	0.5	Highland	2014
APW Bulk Tank	2-Methylphenol	180-34895-1	1	0.5	mg/L	U	1	Santa Ana	2014
APW	2-Methylphenol	180-58151-1	1.3	0.65	mg/L	U	1.3	Santa Ana	2016
Aqueous IC	2-Methylphenol	180-34938-2	2	1	mg/L	U	2	Santa Ana	2014
Aqueous IC	2-Methylphenol	180-52258-1	2	1	mg/L	U	2	Santa Ana	2015
Aqueous IC	2-Methylphenol	180-46921-1	2.4	2.4	mg/L		0.5	Los Angeles	2015
Aqueous IC	2-Methylphenol	180-1863-1	100	50	mg/L	U	100	Santa Ana	2011
Aqueous IC	Arsenic	180-42424-1	0.04	0.04	mg/L	J	0.1	Chandler	2015
APW Bulk Tank	Arsenic	180-49517-1	0.043	0.043	mg/L	J	0.5	Fresno	2015
APW	Arsenic	180-13030-1	0.046	0.046	mg/L	J	0.1	Highland	2012
Aqueous IC	Arsenic	180-82080-2	0.047	0.047	mg/L	J	0.1	Santa Ana	2018
APW	Arsenic	180-13997-1	0.049	0.049	mg/L	J B	0.1	Highland	2012
APW	Arsenic	180-58151-1	0.049	0.049	mg/L	J	0.1	Santa Ana	2016
APW Bulk Tank	Arsenic	180-68412-1	0.049	0.049	mg/L	J	0.1	Los Angeles	2017
APW	Arsenic	180-79848-1	0.049	0.049	mg/L	J	0.1	Los Angeles	2018
APW	Arsenic	180-1123-1	0.1	0.05	mg/L	U	0.1	Sacramento	2011
Aqueous IC	Arsenic	180-1133-1	0.1	0.05	mg/L	U	0.1	Sacramento	2011
APW	Arsenic	180-1862-1	0.1	0.05	mg/L	U	0.1	Santa Ana	2011
Aqueous IC	Arsenic	180-1863-1	0.1	0.05	mg/L	U	0.1	Santa Ana	2011
Aqueous IC	Arsenic	180-1930-1	0.1	0.05	mg/L	U	0.1	Los Angeles	2011
APW	Arsenic	180-1957-1	0.1	0.05	mg/L	U	0.1	Fresno	2011
APW	Arsenic	180-1961-1	0.1	0.05	mg/L	U	0.1	Highland	2011
Aqueous IC	Arsenic	180-1963-2	0.1	0.05	mg/L	U	0.1	Highland	2011
APW	Arsenic	180-12869-1	0.1	0.05	mg/L	U	0.1	Los Angeles	2012
APW	Arsenic	180-12870-1	0.1	0.05	mg/L	U	0.1	Fresno	2012
APW	Arsenic	180-11964-1	0.1	0.05	mg/L	U	0.1	Sacramento	2012
Aqueous IC	Arsenic	180-11264-1	0.1	0.05	mg/L	U	0.1	Santa Ana	2012
Aqueous IC	Arsenic	180-11971-1	0.1	0.05	mg/L	U	0.1	Sacramento	2012
APW	Arsenic	180-23542-1	0.1	0.05	mg/L	U	0.1	Fresno	2013
APW	Arsenic	180-23543-1	0.1	0.05	mg/L	U	0.1	Highland	2013
Aqueous IC	Arsenic	180-23567-2	0.1	0.05	mg/L	U	0.1	Los Angeles	2013
APW	Arsenic	180-25501-1	0.1	0.05	mg/L	U	0.1	Sacramento	2013
Aqueous IC	Arsenic	180-25755-1	0.1	0.05	mg/L	U	0.1	Santa Ana	2013

APW Bulk Tank	Arsenic	180-35276-1	0.1	0.05	mg/L	U	0.1			Highland	2014
APW	Arsenic	180-42909-1	0.1	0.05	mg/L	U	0.1			Boise	2015
APW	Arsenic	180-52260-1	0.1	0.05	mg/L	U	0.1			Santa Ana	2015
APW	Arsenic	180-52525-1	0.1	0.05	mg/L	U	0.1			Boise	2016
Aqueous IC	Arsenic	180-57955-1	0.1	0.05	mg/L	U	0.1			Los Angeles	2016
APW	Arsenic	180-67799-1	0.1	0.05	mg/L	U	0.1			Santa Ana	2017
APW	Arsenic	180-64793-1	0.1	0.05	mg/L	U	0.1			Wichita	2017
APW	Arsenic	180-78618-1	0.1	0.05	mg/L	U	0.1			Santa Ana	2018
APW	Arsenic	180-70635-1	0.055	0.055	mg/L	J	0.1			Salisbury	2017
APW	Arsenic	180-80854-1	0.055	0.055	mg/L	J	0.1			Sacramento	2018
Aqueous IC	Arsenic	180-80856-1	0.057	0.057	mg/L	J	0.1			Sacramento	2018
Aqueous IC	Arsenic	180-35277-1	0.058	0.058	mg/L	J	0.1			Los Angeles	2014
APW	Arsenic	180-64610-1	0.058	0.058	mg/L	J	0.1			Chandler	2017
APW	Arsenic	180-77402-1	0.06	0.06	mg/L	J	0.1			Boise	2018
APW Bulk Tank	Arsenic	180-78615-1	0.061	0.061	mg/L	J	0.1			Santa Ana	2018
APW	Arsenic	180-81361-1	0.063	0.063	mg/L	J	0.1			Salisbury	2018
APW	Arsenic	180-1933-1	0.064	0.064	mg/L	J	0.1			Los Angeles	2011
APW	Arsenic	180-76205-1	0.064	0.064	mg/L	J	0.1			Wichita	2018
APW	Arsenic	180-39595-1	0.066	0.066	mg/L	J	0.1			Fresno	2014
APW	Arsenic	180-76916-1	0.066	0.066	mg/L	J	0.1			Chandler	2018
APW Bulk Tank	Arsenic	180-79850-2	0.076	0.076	mg/L	J	0.1	47	78	Los Angeles	2018
APW	Arsenic	180-70452-1	0.085	0.085	mg/L	J	0.1			Sacramento	2017
APW	Arsenic	180-68411-1	0.092	0.092	mg/L	J	0.1			Los Angeles	2017
APW Bulk Tank	Arsenic	180-58156-1	0.099	0.099	mg/L	J	0.1			Santa Ana	2016
APW	Arsenic	180-35960-2	0.2	0.1	mg/L	U	0.2			Sacramento	2014
APW Bulk	Arsenic	180-46604-1	0.2	0.1	mg/L	U	0.2			Los Angeles	2015
Aqueous IC	Arsenic	180-52258-2	0.2	0.1	mg/L	U	0.2			Santa Ana	2015
APW Bulk Tank	Arsenic	180-70449-1	0.11	0.11	mg/L		0.1			Sacramento	2017
APW	Arsenic	180-82402-1	0.11	0.11	mg/L		0.1			Clackamas	2018
APW	Arsenic	180-79774-1	0.12	0.12	mg/L		0.1			Oklahoma City	2018
Aqueous IC	Arsenic	180-67798-1	0.15	0.15	mg/L		0.1			Santa Ana	2017
APW	Arsenic	180-23540-1	0.5	0.25	mg/L	U	0.5			Los Angeles	2013
APW	Arsenic	180-38298-1	0.5	0.25	mg/L	U	0.5			Boise	2014
APW	Arsenic	180-49157-1	0.5	0.25	mg/L	U	0.5			Sacramento	2015

Aqueous IC	Arsenic	180-46921-1	0.5	0.25	mg/L	U	0.5	Los Angeles	2015
APW Bulk	Arsenic	180-47817-1	0.5	0.25	mg/L	U	0.5	Highland	2015
APW	Arsenic	180-57948-2	0.5	0.25	mg/L	U	0.5	Los Angeles	2016
APW	Arsenic	180-58632-1	0.5	0.25	mg/L	U	0.5	Sacramento	2016
Aqueous IC	Arsenic	180-58633-1	0.5	0.25	mg/L	U	0.5	Sacramento	2016
APW Bulk Tank	Arsenic	180-58407-1	0.5	0.25	mg/L	U	0.5	Fresno	2016
APW Bulk Tank	Arsenic	180-58654-1	0.5	0.25	mg/L	U	0.5	Highland	2016
APW Bulk Tank	Arsenic	180-57950-2	0.5	0.25	mg/L	U	0.5	Los Angeles	2016
APW Bulk Tank	Arsenic	180-58626-1	0.5	0.25	mg/L	U	0.5	Sacramento	2016
APW	Arsenic	180-66778-1	0.5	0.25	mg/L	U	0.5	Boise	2017
APW Bulk Tank	Arsenic	180-71593-1	0.5	0.25	mg/L	U	0.5	Santa Ana	2018
APW	Arsenic	180-76918-1	0.27	0.27	mg/L		0.1	Salt Lake City	2018
APW Bulk Tank	Arsenic	180-35141-1	0.29	0.29	mg/L		0.2	Los Angeles	2014
APW Bulk	Arsenic	180-1968-1	0.47	0.47	mg/L		0.1	El Monte	2011
Aqueous IC	Arsenic	180-23587-1	0.97	0.485	mg/L	U	0.97	Highland	2013
APW Bulk Tank	Arsenic	180-25297-1	1	0.5	mg/L	U	1	El Monte	2013
APW Bulk Tank	Arsenic	180-34895-1	1	0.5	mg/L	U	1	Santa Ana	2014
Aqueous IC	Arsenic	180-34938-1	1	0.5	mg/L	U	1	Santa Ana	2014
Aqueous IC	Barium	180-1133-1	0.015	0.015	mg/L	J	2	Sacramento	2011
APW	Barium	180-76205-1	0.019	0.019	mg/L	J	2	Wichita	2018
APW	Barium	180-76916-1	0.021	0.021	mg/L	J	2	Chandler	2018
Aqueous IC	Barium	180-35277-1	0.03	0.03	mg/L	J	2	Los Angeles	2014
APW	Barium	180-42909-1	0.03	0.03	mg/L	J B	2	Boise	2015
Aqueous IC	Barium	180-82080-2	0.031	0.031	mg/L	J	2	Santa Ana	2018
Aqueous IC	Barium	180-42424-1	0.041	0.041	mg/L	J	2	Chandler	2015
APW	Barium	180-78618-1	0.041	0.041	mg/L	J	2	Santa Ana	2018
Aqueous IC	Barium	180-57955-1	0.042	0.042	mg/L	J	2	Los Angeles	2016
APW Bulk Tank	Barium	180-58407-1	0.051	0.051	mg/L	J	2	Fresno	2016
APW	Barium	180-23540-1	0.055	0.055	mg/L	J	2	Los Angeles	2013
Aqueous IC	Barium	180-52258-2	0.058	0.058	mg/L	J B	4	Santa Ana	2015
APW	Barium	180-12870-1	0.066	0.066	mg/L	J	2	Fresno	2012
APW	Barium	180-52525-1	0.068	0.068	mg/L	J	2	Boise	2016
APW	Barium	180-77402-1	0.079	0.079	mg/L	J	2	Boise	2018
APW	Barium	180-57948-2	0.08	0.08	mg/L	J	2	Los Angeles	2016

APW	Barium	180-38298-1	0.094	0.094	mg/L	J	10			Boise	2014
Aqueous IC	Barium	180-11264-1	0.1	0.1	mg/L	J	2			Santa Ana	2012
APW	Barium	180-76918-1	0.1	0.1	mg/L	J	2			Salt Lake City	2018
Aqueous IC	Barium	180-23567-2	0.11	0.11	mg/L	J	2			Los Angeles	2013
APW	Barium	180-79848-1	0.11	0.11	mg/L	J	2			Los Angeles	2018
Aqueous IC	Barium	180-80856-1	0.11	0.11	mg/L	J	2			Sacramento	2018
Aqueous IC	Barium	180-34938-1	0.12	0.12	mg/L	J	20			Santa Ana	2014
APW Bulk	Barium	180-47817-1	0.12	0.12	mg/L	J	2			Highland	2015
APW	Barium	180-64793-1	0.12	0.12	mg/L	J	2			Wichita	2017
APW	Barium	180-1862-1	0.13	0.13	mg/L	J	2000			Santa Ana	2011
APW Bulk Tank	Barium	180-34895-1	0.13	0.13	mg/L	J	20			Santa Ana	2014
APW	Barium	180-70635-1	0.14	0.14	mg/L	J	2			Salisbury	2017
APW	Barium	180-1123-1	0.15	0.15	mg/L	J	2			Sacramento	2011
APW	Barium	180-79774-1	0.15	0.15	mg/L	J	2			Oklahoma City	2018
Aqueous IC	Barium	180-1863-1	0.16	0.16	mg/L	J	2			Santa Ana	2011
APW	Barium	180-52260-1	0.17	0.17	mg/L	J B	2			Santa Ana	2015
APW Bulk Tank	Barium	180-58654-1	0.18	0.18	mg/L	J	2			Highland	2016
Aqueous IC	Barium	180-67798-1	0.18	0.18	mg/L	J	2			Santa Ana	2017
APW	Barium	180-80854-1	0.18	0.18	mg/L	J	2			Sacramento	2018
Aqueous IC	Barium	180-1930-1	0.19	0.19	mg/L	J	2			Los Angeles	2011
Aqueous IC	Barium	180-11971-1	0.19	0.19	mg/L	J	2			Sacramento	2012
Aqueous IC	Barium	180-25755-1	0.19	0.19	mg/L	J	2			Santa Ana	2013
APW	Barium	180-35960-2	0.19	0.19	mg/L	J	4			Sacramento	2014
APW Bulk	Barium	180-46604-1	0.21	0.21	mg/L	J	4			Los Angeles	2015
APW Bulk Tank	Barium	180-78615-1	0.22	0.22	mg/L	J	2			Santa Ana	2018
APW Bulk Tank	Barium	180-35276-1	0.23	0.23	mg/L	J	2			Highland	2014
APW Bulk Tank	Barium	180-35141-1	0.24	0.24	mg/L	J	4			Los Angeles	2014
APW Bulk Tank	Barium	180-68412-1	0.25	0.25	mg/L	J	2			Los Angeles	2017
APW	Barium	180-67799-1	0.3	0.3	mg/L	J	2			Santa Ana	2017
APW	Barium	180-39595-1	0.36	0.36	mg/L	J	2			Fresno	2014
Aqueous IC	Barium	180-46921-1	0.37	0.37	mg/L	J	10	47	78	Los Angeles	2015
APW	Barium	180-81361-1	0.38	0.38	mg/L	J	2			Salisbury	2018
APW	Barium	180-1961-1	0.39	0.39	mg/L	J	2000			Highland	2011
APW Bulk Tank	Barium	180-79850-2	0.4	0.4	mg/L	J	2			Los Angeles	2018

APW Bulk Tank	Barium	180-70449-1	0.42	0.42	mg/L	J	2	Sacramento	2017
Aqueous IC	Barium	180-1963-2	0.45	0.45	mg/L	J	2	Highland	2011
APW	Barium	180-13997-1	0.49	0.49	mg/L	J	2	Highland	2012
APW	Barium	180-12869-1	0.51	0.51	mg/L	J	2	Los Angeles	2012
APW	Barium	180-13030-1	0.54	0.54	mg/L	J	2	Highland	2012
APW	Barium	180-49157-1	0.54	0.54	mg/L	J	2	Sacramento	2015
APW	Barium	180-68411-1	0.58	0.58	mg/L	J	2	Los Angeles	2017
APW	Barium	180-23542-1	0.59	0.59	mg/L	J	2	Fresno	2013
APW Bulk Tank	Barium	180-58156-1	0.67	0.67	mg/L	J	2	Santa Ana	2016
APW Bulk Tank	Barium	180-25297-1	0.8	0.8	mg/L	J B	20	El Monte	2013
APW Bulk Tank	Barium	180-57950-2	0.81	0.81	mg/L	J	2	Los Angeles	2016
APW	Barium	180-25501-1	0.83	0.83	mg/L	J	2	Sacramento	2013
APW Bulk Tank	Barium	180-71593-1	0.87	0.87	mg/L	J	2	Santa Ana	2018
APW	Barium	180-23543-1	1	1	mg/L	J	2	Highland	2013
APW	Barium	180-64610-1	2	1	mg/L	U	2	Chandler	2017
APW	Barium	180-58151-1	1.1	1.1	mg/L	J	2	Santa Ana	2016
APW	Barium	180-70452-1	1.1	1.1	mg/L	J	2	Sacramento	2017
APW	Barium	180-82402-1	1.3	1.3	mg/L	J	2	Clackamas	2018
APW	Barium	180-11964-1	1.4	1.4	mg/L	J	2	Sacramento	2012
APW Bulk Tank	Barium	180-49517-1	1.6	1.6	mg/L	J B	2	Fresno	2015
APW Bulk Tank	Barium	180-58626-1	2.1	2.1	mg/L		2	Sacramento	2016
APW	Barium	180-1957-1	2.9	2.9	mg/L		2000	Fresno	2011
APW	Barium	180-58632-1	10	5	mg/L	U	10	Sacramento	2016
Aqueous IC	Barium	180-58633-1	10	5	mg/L	U	10	Sacramento	2016
APW	Barium	180-66778-1	10	5	mg/L	U	10	Boise	2017
APW	Barium	180-1933-1	8.9	8.9	mg/L		2000	Los Angeles	2011
Aqueous IC	Barium	180-23587-1	19	9.5	mg/L	U	19	Highland	2013
APW Bulk	Barium	180-1968-1	52	52	mg/L		2000	El Monte	2011
APW	Benzene	180-1123-1	0.2	0.1	mg/L	U	0.2	Sacramento	2011
APW	Benzene	180-1933-1	0.2	0.1	mg/L	U	0.2	Los Angeles	2011
APW	Benzene	180-1862-1	0.2	0.1	mg/L	U	0.2	Santa Ana	2011
APW	Benzene	180-1957-1	0.2	0.1	mg/L	U	0.2	Fresno	2011
APW	Benzene	180-1961-1	0.2	0.1	mg/L	U	0.2	Highland	2011
APW Bulk	Benzene	180-1968-1	0.2	0.1	mg/L	U	0.2	El Monte	2011

APW	Benzene	180-12869-1	0.2	0.1	mg/L	U	0.2	Los Angeles	2012
APW	Benzene	180-13030-1	0.2	0.1	mg/L	U	0.2	Highland	2012
APW	Benzene	180-13997-1	0.2	0.1	mg/L	U	0.2	Highland	2012
APW	Benzene	180-12870-1	0.2	0.1	mg/L	U	0.2	Fresno	2012
APW	Benzene	180-11964-1	0.2	0.1	mg/L	U	0.2	Sacramento	2012
Aqueous IC	Benzene	180-11264-1	0.2	0.1	mg/L	U	0.2	Santa Ana	2012
Aqueous IC	Benzene	180-11971-1	0.2	0.1	mg/L	U	0.2	Sacramento	2012
APW	Benzene	180-23542-1	0.2	0.1	mg/L	U	0.2	Fresno	2013
APW	Benzene	180-23543-1	0.2	0.1	mg/L	U	0.2	Highland	2013
APW	Benzene	180-23540-1	0.2	0.1	mg/L	U	0.2	Los Angeles	2013
APW	Benzene	180-25501-1	0.2	0.1	mg/L	U	0.2	Sacramento	2013
APW Bulk Tank	Benzene	180-35276-1	0.2	0.1	mg/L	U	0.2	Highland	2014
APW Bulk Tank	Benzene	180-35141-1	0.2	0.1	mg/L	U	0.2	Los Angeles	2014
Aqueous IC	Benzene	180-35277-1	0.2	0.1	mg/L	U	0.2	Los Angeles	2014
APW	Benzene	180-35960-2	0.2	0.1	mg/L	U	0.2	Sacramento	2014
APW	Benzene	180-38298-1	0.2	0.1	mg/L	U	0.2	Boise	2014
APW	Benzene	180-39595-1	0.2	0.1	mg/L	U	0.2	Fresno	2014
APW	Benzene	180-42909-1	0.2	0.1	mg/L	U	0.2	Boise	2015
APW	Benzene	180-49157-1	0.2	0.1	mg/L	U	0.2	Sacramento	2015
Aqueous IC	Benzene	180-42424-1	0.2	0.1	mg/L	U	0.2	Chandler	2015
APW Bulk	Benzene	180-47817-1	0.2	0.1	mg/L	U	0.2	Highland	2015
APW Bulk	Benzene	180-46604-1	0.2	0.1	mg/L	U	0.2	Los Angeles	2015
APW	Benzene	180-52260-1	0.2	0.1	mg/L	U	0.2	Santa Ana	2015
APW Bulk Tank	Benzene	180-49517-1	0.2	0.1	mg/L	U	0.2	Fresno	2015
APW	Benzene	180-52525-1	0.2	0.1	mg/L	U	0.2	Boise	2016
APW	Benzene	180-57948-2	0.2	0.1	mg/L	U	0.2	Los Angeles	2016
APW	Benzene	180-58632-1	0.2	0.1	mg/L	U	0.2	Sacramento	2016
APW	Benzene	180-58151-1	0.2	0.1	mg/L	U	0.2	Santa Ana	2016
Aqueous IC	Benzene	180-57955-1	0.2	0.1	mg/L	U	0.2	Los Angeles	2016
Aqueous IC	Benzene	180-58633-1	0.2	0.1	mg/L	U	0.2	Sacramento	2016
APW Bulk Tank	Benzene	180-58407-1	0.2	0.1	mg/L	U	0.2	Fresno	2016
APW Bulk Tank	Benzene	180-58654-1	0.2	0.1	mg/L	U	0.2	Highland	2016
APW Bulk Tank	Benzene	180-57950-2	0.2	0.1	mg/L	U	0.2	Los Angeles	2016
APW Bulk Tank	Benzene	180-58626-1	0.2	0.1	mg/L	U	0.2	Sacramento	2016

APW Bulk Tank	Benzene	180-58156-1	0.2	0.1	mg/L	U	0.2			Santa Ana	2016
APW	Benzene	180-66778-1	0.2	0.1	mg/L	U	0.2			Boise	2017
APW	Benzene	180-64610-1	0.2	0.1	mg/L	U	0.2			Chandler	2017
APW	Benzene	180-68411-1	0.2	0.1	mg/L	U	0.2			Los Angeles	2017
APW	Benzene	180-70635-1	0.2	0.1	mg/L	U	0.2			Salisbury	2017
APW	Benzene	180-67799-1	0.2	0.1	mg/L	U	0.2			Santa Ana	2017
APW	Benzene	180-64793-1	0.2	0.1	mg/L	U	0.2	47	78	Wichita	2017
APW	Benzene	180-70452-1	0.2	0.1	mg/L	U	0.2			Sacramento	2017
APW Bulk Tank	Benzene	180-68412-1	0.2	0.1	mg/L	U	0.2			Los Angeles	2017
APW Bulk Tank	Benzene	180-70449-1	0.2	0.1	mg/L	U	0.2			Sacramento	2017
Aqueous IC	Benzene	180-67798-1	0.2	0.1	mg/L	U	0.2			Santa Ana	2017
APW	Benzene	180-77402-1	0.2	0.1	mg/L	U	0.2			Boise	2018
APW	Benzene	180-76916-1	0.2	0.1	mg/L	U	0.2			Chandler	2018
APW	Benzene	180-82402-1	0.2	0.1	mg/L	U	0.2			Clackamas	2018
APW	Benzene	180-79848-1	0.2	0.1	mg/L	U	0.2			Los Angeles	2018
APW	Benzene	180-79774-1	0.2	0.1	mg/L	U	0.2			Oklahoma City	2018
APW	Benzene	180-81361-1	0.2	0.1	mg/L	U F2 F1	0.2			Salisbury	2018
APW	Benzene	180-76918-1	0.2	0.1	mg/L	U	0.2			Salt Lake City	2018
APW	Benzene	180-78618-1	0.2	0.1	mg/L	U	0.2			Santa Ana	2018
APW Bulk Tank	Benzene	180-79850-2	0.2	0.1	mg/L	U	0.2			Los Angeles	2018
APW Bulk Tank	Benzene	180-78615-1	0.2	0.1	mg/L	U	0.2			Santa Ana	2018
APW Bulk Tank	Benzene	180-71593-1	0.2	0.1	mg/L	U	0.2			Santa Ana	2018
Aqueous IC	Benzene	180-80856-1	0.2	0.1	mg/L	U	0.2			Sacramento	2018
Aqueous IC	Benzene	180-82080-2	0.2	0.1	mg/L	U	0.2			Santa Ana	2018
Aqueous IC	Benzene	180-23587-1	0.25	0.125	mg/L	U	0.25			Highland	2013
APW	Benzene	180-76205-1	0.16	0.16	mg/L	J	0.2			Wichita	2018
Aqueous IC	Benzene	180-1133-2	0.5	0.25	mg/L	U	0.5			Sacramento	2011
Aqueous IC	Benzene	180-1863-2	0.5	0.25	mg/L	U	0.5			Santa Ana	2011
Aqueous IC	Benzene	180-1930-2	0.5	0.25	mg/L	U	0.5			Los Angeles	2011
Aqueous IC	Benzene	180-1963-1	0.5	0.25	mg/L	U	0.5			Highland	2011
Aqueous IC	Benzene	180-23567-1	0.5	0.25	mg/L	U	0.5			Los Angeles	2013
APW Bulk Tank	Benzene	180-25297-1	0.5	0.25	mg/L	U	0.5			El Monte	2013
APW Bulk Tank	Benzene	180-34895-1	0.5	0.25	mg/L	U	0.5			Santa Ana	2014
Aqueous IC	Benzene	180-34938-2	0.5	0.25	mg/L	U	0.5			Santa Ana	2014

Aqueous IC	Benzene	180-52258-1	0.5	0.25	mg/L	U	0.5	Santa Ana	2015
APW	Benzene	180-80854-1	4	2	mg/L	U	4	Sacramento	2018
Aqueous IC	Benzene	180-46921-1	4.2	4.2	mg/L		0.2	Los Angeles	2015
Aqueous IC	Benzene	180-25755-1	40	20	mg/L	U	40	Santa Ana	2013
APW Bulk Tank	Bulk Density	180-71593-1	0.99	0.99	g/cc		0.01	Santa Ana	2018
Aqueous IC	Cadmium	180-23567-2	0.0015	0.0015	mg/L	J	0.05	Los Angeles	2013
APW	Cadmium	180-79774-1	0.0021	0.0021	mg/L	J	0.05	Oklahoma City	2018
Aqueous IC	Cadmium	180-42424-1	0.0023	0.0023	mg/L	J	0.05	Chandler	2015
APW	Cadmium	180-23543-1	0.0026	0.0026	mg/L	J	0.05	Highland	2013
APW	Cadmium	180-12870-1	0.0028	0.0028	mg/L	J	0.05	Fresno	2012
Aqueous IC	Cadmium	180-11264-1	0.0031	0.0031	mg/L	J	0.05	Santa Ana	2012
APW	Cadmium	180-39595-1	0.0031	0.0031	mg/L	J B	0.05	Fresno	2014
APW	Cadmium	180-1957-1	0.0035	0.0035	mg/L	J	0.05	Fresno	2011
APW Bulk Tank	Cadmium	180-58654-1	0.0037	0.0037	mg/L	J	0.5	Highland	2016
APW	Cadmium	180-77402-1	0.0037	0.0037	mg/L	J	0.05	Boise	2018
APW	Cadmium	180-81361-1	0.0037	0.0037	mg/L	J	0.05	Salisbury	2018
Aqueous IC	Cadmium	180-1930-1	0.0038	0.0038	mg/L	J	0.05	Los Angeles	2011
APW	Cadmium	180-64793-1	0.0039	0.0039	mg/L	J	0.05	Wichita	2017
APW	Cadmium	180-79848-1	0.004	0.004	mg/L	J	0.05	Los Angeles	2018
APW Bulk	Cadmium	180-47817-1	0.0044	0.0044	mg/L	J	0.5	Highland	2015
APW	Cadmium	180-78618-1	0.0045	0.0045	mg/L	J	0.05	Santa Ana	2018
APW	Cadmium	180-42909-1	0.0049	0.0049	mg/L	J	0.05	Boise	2015
Aqueous IC	Cadmium	180-1963-2	0.0051	0.0051	mg/L	J	0.05	Highland	2011
APW	Cadmium	180-57948-2	0.0051	0.0051	mg/L	J	0.5	Los Angeles	2016
Aqueous IC	Cadmium	180-82080-2	0.0057	0.0057	mg/L	J	0.05	Santa Ana	2018
APW	Cadmium	180-82402-1	0.006	0.006	mg/L	J	0.05	Clackamas	2018
APW	Cadmium	180-76918-1	0.0065	0.0065	mg/L	J	0.05	Salt Lake City	2018
APW	Cadmium	180-23540-1	0.0069	0.0069	mg/L	J	0.05	Los Angeles	2013
APW Bulk Tank	Cadmium	180-58407-1	0.0074	0.0074	mg/L	J	0.5	Fresno	2016
Aqueous IC	Cadmium	180-46921-1	0.0085	0.0085	mg/L	J	0.25	Los Angeles	2015
APW	Cadmium	180-25501-1	0.0089	0.0089	mg/L	J	0.05	Sacramento	2013
APW	Cadmium	180-13997-1	0.011	0.011	mg/L	J	0.05	Highland	2012
APW	Cadmium	180-1123-1	0.012	0.012	mg/L	J	0.05	Sacramento	2011
APW	Cadmium	180-12869-1	0.013	0.013	mg/L	J	0.05	Los Angeles	2012

Aqueous IC	Cadmium	180-67798-1	0.015	0.015	mg/L	J	0.05			Santa Ana	2017
APW	Cadmium	180-52525-1	0.017	0.017	mg/L	J	0.05			Boise	2016
APW	Cadmium	180-70635-1	0.018	0.018	mg/L	J	0.05			Salisbury	2017
APW Bulk Tank	Cadmium	180-34895-1	0.022	0.022	mg/L	J B	0.5			Santa Ana	2014
Aqueous IC	Cadmium	180-80856-1	0.022	0.022	mg/L	J	0.05			Sacramento	2018
APW	Cadmium	180-52260-1	0.024	0.024	mg/L	J	0.05			Santa Ana	2015
APW Bulk Tank	Cadmium	180-35276-1	0.025	0.025	mg/L	J	0.05			Highland	2014
Aqueous IC	Cadmium	180-1133-1	0.05	0.025	mg/L	U	0.05			Sacramento	2011
APW	Cadmium	180-1862-1	0.05	0.025	mg/L	U	0.05			Santa Ana	2011
Aqueous IC	Cadmium	180-1863-1	0.05	0.025	mg/L	U	0.05			Santa Ana	2011
APW	Cadmium	180-1961-1	0.05	0.025	mg/L	U	0.05			Highland	2011
APW	Cadmium	180-11964-1	0.05	0.025	mg/L	U	0.05			Sacramento	2012
Aqueous IC	Cadmium	180-25755-1	0.05	0.025	mg/L	U	0.05			Santa Ana	2013
Aqueous IC	Cadmium	180-35277-1	0.05	0.025	mg/L	U	0.05			Los Angeles	2014
APW	Cadmium	180-58151-1	0.05	0.025	mg/L	U	0.05			Santa Ana	2016
Aqueous IC	Cadmium	180-57955-1	0.05	0.025	mg/L	U	0.05			Los Angeles	2016
APW	Cadmium	180-64610-1	0.05	0.025	mg/L	U	0.05			Chandler	2017
APW Bulk Tank	Cadmium	180-71593-1	0.025	0.025	mg/L	J	0.5	47	78	Santa Ana	2018
APW	Cadmium	180-35960-2	0.027	0.027	mg/L	J	0.1			Sacramento	2014
APW	Cadmium	180-66778-1	0.027	0.027	mg/L	J	0.25			Boise	2017
APW	Cadmium	180-13030-1	0.033	0.033	mg/L	J	0.05			Highland	2012
APW Bulk Tank	Cadmium	180-68412-1	0.038	0.038	mg/L	J	0.05			Los Angeles	2017
APW	Cadmium	180-23542-1	0.04	0.04	mg/L	J	0.05			Fresno	2013
APW Bulk Tank	Cadmium	180-35141-1	0.04	0.04	mg/L	J	0.1			Los Angeles	2014
APW	Cadmium	180-49157-1	0.04	0.04	mg/L	J	0.05			Sacramento	2015
APW Bulk	Cadmium	180-46604-1	0.041	0.041	mg/L	J B	0.1			Los Angeles	2015
APW	Cadmium	180-76205-1	0.043	0.043	mg/L	J	0.05			Wichita	2018
APW Bulk Tank	Cadmium	180-70449-1	0.054	0.054	mg/L		0.05			Sacramento	2017
APW Bulk Tank	Cadmium	180-78615-1	0.055	0.055	mg/L		0.05			Santa Ana	2018
APW Bulk Tank	Cadmium	180-57950-2	0.056	0.056	mg/L	J	0.5			Los Angeles	2016
Aqueous IC	Cadmium	180-52258-2	0.057	0.057	mg/L	J	0.1			Santa Ana	2015
APW Bulk Tank	Cadmium	180-58626-1	0.061	0.061	mg/L	J	0.5			Sacramento	2016
APW	Cadmium	180-76916-1	0.064	0.064	mg/L		0.05			Chandler	2018
APW Bulk Tank	Cadmium	180-79850-2	0.07	0.07	mg/L		0.05			Los Angeles	2018

APW Bulk Tank	Cadmium	180-25297-1	0.076	0.076	mg/L	J	0.5	El Monte	2013
APW	Cadmium	180-68411-1	0.087	0.087	mg/L		0.05	Los Angeles	2017
APW	Cadmium	180-70452-1	0.1	0.1	mg/L		0.05	Sacramento	2017
APW	Cadmium	180-1933-1	0.12	0.12	mg/L		0.05	Los Angeles	2011
APW	Cadmium	180-58632-1	0.25	0.125	mg/L	U	0.25	Sacramento	2016
Aqueous IC	Cadmium	180-58633-1	0.25	0.125	mg/L	U	0.25	Sacramento	2016
Aqueous IC	Cadmium	180-11971-1	0.14	0.14	mg/L		0.05	Sacramento	2012
APW	Cadmium	180-38298-1	0.15	0.15	mg/L	J B	0.25	Boise	2014
APW Bulk Tank	Cadmium	180-58156-1	0.19	0.19	mg/L		0.05	Santa Ana	2016
APW	Cadmium	180-80854-1	0.19	0.19	mg/L		0.05	Sacramento	2018
Aqueous IC	Cadmium	180-23587-1	0.49	0.245	mg/L	U	0.49	Highland	2013
Aqueous IC	Cadmium	180-34938-1	0.5	0.25	mg/L	U	0.5	Santa Ana	2014
APW Bulk Tank	Cadmium	180-49517-1	0.37	0.37	mg/L	J	0.5	Fresno	2015
APW	Cadmium	180-67799-1	0.39	0.39	mg/L		0.05	Santa Ana	2017
APW Bulk	Cadmium	180-1968-1	2.4	2.4	mg/L		0.05	El Monte	2011
APW	Carbon Tetrachloride	180-1123-1	0.2	0.1	mg/L	U	0.2	Sacramento	2011
APW	Carbon Tetrachloride	180-1933-1	0.2	0.1	mg/L	U	0.2	Los Angeles	2011
APW	Carbon Tetrachloride	180-1862-1	0.2	0.1	mg/L	U	0.2	Santa Ana	2011
APW	Carbon Tetrachloride	180-1957-1	0.2	0.1	mg/L	U	0.2	Fresno	2011
APW	Carbon Tetrachloride	180-1961-1	0.2	0.1	mg/L	U	0.2	Highland	2011
APW Bulk	Carbon Tetrachloride	180-1968-1	0.2	0.1	mg/L	U	0.2	El Monte	2011
APW	Carbon Tetrachloride	180-12869-1	0.2	0.1	mg/L	U	0.2	Los Angeles	2012
APW	Carbon Tetrachloride	180-13030-1	0.2	0.1	mg/L	U	0.2	Highland	2012
APW	Carbon Tetrachloride	180-13997-1	0.2	0.1	mg/L	U	0.2	Highland	2012
APW	Carbon Tetrachloride	180-12870-1	0.2	0.1	mg/L	U	0.2	Fresno	2012
APW	Carbon Tetrachloride	180-11964-1	0.2	0.1	mg/L	U	0.2	Sacramento	2012
Aqueous IC	Carbon Tetrachloride	180-11264-1	0.2	0.1	mg/L	U	0.2	Santa Ana	2012
Aqueous IC	Carbon Tetrachloride	180-11971-1	0.2	0.1	mg/L	U	0.2	Sacramento	2012
APW	Carbon Tetrachloride	180-23542-1	0.2	0.1	mg/L	U	0.2	Fresno	2013
APW	Carbon Tetrachloride	180-23543-1	0.2	0.1	mg/L	U	0.2	Highland	2013
APW	Carbon Tetrachloride	180-23540-1	0.2	0.1	mg/L	U	0.2	Los Angeles	2013
APW	Carbon Tetrachloride	180-25501-1	0.2	0.1	mg/L	U	0.2	Sacramento	2013
APW Bulk Tank	Carbon Tetrachloride	180-35276-1	0.2	0.1	mg/L	U	0.2	Highland	2014
APW Bulk Tank	Carbon Tetrachloride	180-35141-1	0.2	0.1	mg/L	U	0.2	Los Angeles	2014

Aqueous IC	Carbon Tetrachloride	180-35277-1	0.2	0.1	mg/L	U	0.2			Los Angeles	2014
APW	Carbon Tetrachloride	180-35960-2	0.2	0.1	mg/L	U	0.2			Sacramento	2014
APW	Carbon Tetrachloride	180-38298-1	0.2	0.1	mg/L	U	0.2			Boise	2014
APW	Carbon Tetrachloride	180-39595-1	0.2	0.1	mg/L	U	0.2			Fresno	2014
APW	Carbon Tetrachloride	180-42909-1	0.2	0.1	mg/L	U	0.2			Boise	2015
APW	Carbon Tetrachloride	180-49157-1	0.2	0.1	mg/L	U	0.2			Sacramento	2015
Aqueous IC	Carbon Tetrachloride	180-42424-1	0.2	0.1	mg/L	U	0.2			Chandler	2015
Aqueous IC	Carbon Tetrachloride	180-46921-1	0.2	0.1	mg/L	U	0.2			Los Angeles	2015
APW Bulk	Carbon Tetrachloride	180-47817-1	0.2	0.1	mg/L	U	0.2			Highland	2015
APW Bulk	Carbon Tetrachloride	180-46604-1	0.2	0.1	mg/L	U	0.2			Los Angeles	2015
APW	Carbon Tetrachloride	180-52260-1	0.2	0.1	mg/L	U	0.2			Santa Ana	2015
APW Bulk Tank	Carbon Tetrachloride	180-49517-1	0.2	0.1	mg/L	U	0.2			Fresno	2015
APW	Carbon Tetrachloride	180-52525-1	0.2	0.1	mg/L	U	0.2			Boise	2016
APW	Carbon Tetrachloride	180-57948-2	0.2	0.1	mg/L	U	0.2			Los Angeles	2016
APW	Carbon Tetrachloride	180-58632-1	0.2	0.1	mg/L	U	0.2			Sacramento	2016
APW	Carbon Tetrachloride	180-58151-1	0.2	0.1	mg/L	U	0.2			Santa Ana	2016
Aqueous IC	Carbon Tetrachloride	180-57955-1	0.2	0.1	mg/L	U	0.2			Los Angeles	2016
Aqueous IC	Carbon Tetrachloride	180-58633-1	0.2	0.1	mg/L	U	0.2			Sacramento	2016
APW Bulk Tank	Carbon Tetrachloride	180-58407-1	0.2	0.1	mg/L	U	0.2			Fresno	2016
APW Bulk Tank	Carbon Tetrachloride	180-58654-1	0.2	0.1	mg/L	U	0.2			Highland	2016
APW Bulk Tank	Carbon Tetrachloride	180-57950-2	0.2	0.1	mg/L	U	0.2			Los Angeles	2016
APW Bulk Tank	Carbon Tetrachloride	180-58626-1	0.2	0.1	mg/L	U	0.2			Sacramento	2016
APW Bulk Tank	Carbon Tetrachloride	180-58156-1	0.2	0.1	mg/L	U	0.2			Santa Ana	2016
APW	Carbon tetrachloride	180-66778-1	0.2	0.1	mg/L	U	0.2			Boise	2017
APW	Carbon tetrachloride	180-64610-1	0.2	0.1	mg/L	U	0.2			Chandler	2017
APW	Carbon tetrachloride	180-68411-1	0.2	0.1	mg/L	U	0.2			Los Angeles	2017
APW	Carbon tetrachloride	180-70635-1	0.2	0.1	mg/L	U	0.2			Salisbury	2017
APW	Carbon tetrachloride	180-67799-1	0.2	0.1	mg/L	U	0.2	47	78	Santa Ana	2017
APW	Carbon tetrachloride	180-64793-1	0.2	0.1	mg/L	U	0.2			Wichita	2017
APW	Carbon tetrachloride	180-70452-1	0.2	0.1	mg/L	U	0.2			Sacramento	2017
APW Bulk Tank	Carbon tetrachloride	180-68412-1	0.2	0.1	mg/L	U	0.2			Los Angeles	2017
APW Bulk Tank	Carbon tetrachloride	180-70449-1	0.2	0.1	mg/L	U	0.2			Sacramento	2017
Aqueous IC	Carbon tetrachloride	180-67798-1	0.2	0.1	mg/L	U	0.2			Santa Ana	2017
APW	Carbon tetrachloride	180-77402-1	0.2	0.1	mg/L	U	0.2			Boise	2018

APW	Carbon tetrachloride	180-76916-1	0.2	0.1	mg/L	U	0.2	Chandler	2018
APW	Carbon tetrachloride	180-82402-1	0.2	0.1	mg/L	U	0.2	Clackamas	2018
APW	Carbon tetrachloride	180-79848-1	0.2	0.1	mg/L	U	0.2	Los Angeles	2018
APW	Carbon tetrachloride	180-79774-1	0.2	0.1	mg/L	U	0.2	Oklahoma City	2018
APW	Carbon tetrachloride	180-81361-1	0.2	0.1	mg/L	U F2	0.2	Salisbury	2018
APW	Carbon tetrachloride	180-76918-1	0.2	0.1	mg/L	U	0.2	Salt Lake City	2018
APW	Carbon tetrachloride	180-78618-1	0.2	0.1	mg/L	U	0.2	Santa Ana	2018
APW	Carbon tetrachloride	180-76205-1	0.2	0.1	mg/L	U	0.2	Wichita	2018
APW Bulk Tank	Carbon tetrachloride	180-79850-2	0.2	0.1	mg/L	U	0.2	Los Angeles	2018
APW Bulk Tank	Carbon tetrachloride	180-78615-1	0.2	0.1	mg/L	U	0.2	Santa Ana	2018
APW Bulk Tank	Carbon tetrachloride	180-71593-1	0.2	0.1	mg/L	U	0.2	Santa Ana	2018
Aqueous IC	Carbon tetrachloride	180-80856-1	0.2	0.1	mg/L	U	0.2	Sacramento	2018
Aqueous IC	Carbon tetrachloride	180-82080-2	0.2	0.1	mg/L	U	0.2	Santa Ana	2018
Aqueous IC	Carbon Tetrachloride	180-23587-1	0.25	0.125	mg/L	U	0.25	Highland	2013
Aqueous IC	Carbon Tetrachloride	180-1133-2	0.5	0.25	mg/L	U	0.5	Sacramento	2011
Aqueous IC	Carbon Tetrachloride	180-1863-2	0.5	0.25	mg/L	U	0.5	Santa Ana	2011
Aqueous IC	Carbon Tetrachloride	180-1930-2	0.5	0.25	mg/L	U	0.5	Los Angeles	2011
Aqueous IC	Carbon Tetrachloride	180-1963-1	0.5	0.25	mg/L	U	0.5	Highland	2011
Aqueous IC	Carbon Tetrachloride	180-23567-1	0.5	0.25	mg/L	U	0.5	Los Angeles	2013
APW Bulk Tank	Carbon Tetrachloride	180-25297-1	0.5	0.25	mg/L	U	0.5	El Monte	2013
APW Bulk Tank	Carbon Tetrachloride	180-34895-1	0.5	0.25	mg/L	U	0.5	Santa Ana	2014
Aqueous IC	Carbon Tetrachloride	180-34938-2	0.5	0.25	mg/L	U	0.5	Santa Ana	2014
Aqueous IC	Carbon Tetrachloride	180-52258-1	0.5	0.25	mg/L	U	0.5	Santa Ana	2015
APW	Carbon tetrachloride	180-80854-1	4	2	mg/L	U	4	Sacramento	2018
Aqueous IC	Carbon Tetrachloride	180-25755-1	40	20	mg/L	U	40	Santa Ana	2013
APW Bulk Tank	Chlorobenzene	180-49517-1	0.038	0.038	mg/L	J	0.2	Fresno	2015
APW	Chlorobenzene	180-1123-1	0.2	0.1	mg/L	U	0.2	Sacramento	2011
APW	Chlorobenzene	180-1933-1	0.2	0.1	mg/L	U	0.2	Los Angeles	2011
APW	Chlorobenzene	180-1862-1	0.2	0.1	mg/L	U	0.2	Santa Ana	2011
APW	Chlorobenzene	180-1957-1	0.2	0.1	mg/L	U	0.2	Fresno	2011
APW	Chlorobenzene	180-1961-1	0.2	0.1	mg/L	U	0.2	Highland	2011
APW Bulk	Chlorobenzene	180-1968-1	0.2	0.1	mg/L	U	0.2	El Monte	2011
APW	Chlorobenzene	180-12869-1	0.2	0.1	mg/L	U	0.2	Los Angeles	2012
APW	Chlorobenzene	180-13030-1	0.2	0.1	mg/L	U	0.2	Highland	2012

APW	Chlorobenzene	180-13997-1	0.2	0.1	mg/L	U	0.2	Highland	2012
APW	Chlorobenzene	180-12870-1	0.2	0.1	mg/L	U	0.2	Fresno	2012
APW	Chlorobenzene	180-11964-1	0.2	0.1	mg/L	U	0.2	Sacramento	2012
Aqueous IC	Chlorobenzene	180-11264-1	0.2	0.1	mg/L	U	0.2	Santa Ana	2012
Aqueous IC	Chlorobenzene	180-11971-1	0.2	0.1	mg/L	U	0.2	Sacramento	2012
APW	Chlorobenzene	180-23542-1	0.2	0.1	mg/L	U	0.2	Fresno	2013
APW	Chlorobenzene	180-23543-1	0.2	0.1	mg/L	U	0.2	Highland	2013
APW	Chlorobenzene	180-23540-1	0.2	0.1	mg/L	U	0.2	Los Angeles	2013
APW	Chlorobenzene	180-25501-1	0.2	0.1	mg/L	U	0.2	Sacramento	2013
APW Bulk Tank	Chlorobenzene	180-35276-1	0.2	0.1	mg/L	U	0.2	Highland	2014
APW Bulk Tank	Chlorobenzene	180-35141-1	0.2	0.1	mg/L	U	0.2	Los Angeles	2014
Aqueous IC	Chlorobenzene	180-35277-1	0.2	0.1	mg/L	U	0.2	Los Angeles	2014
APW	Chlorobenzene	180-35960-2	0.2	0.1	mg/L	U	0.2	Sacramento	2014
APW	Chlorobenzene	180-38298-1	0.2	0.1	mg/L	U	0.2	Boise	2014
APW	Chlorobenzene	180-39595-1	0.2	0.1	mg/L	U	0.2	Fresno	2014
APW	Chlorobenzene	180-42909-1	0.2	0.1	mg/L	U	0.2	Boise	2015
APW	Chlorobenzene	180-49157-1	0.2	0.1	mg/L	U	0.2	Sacramento	2015
Aqueous IC	Chlorobenzene	180-42424-1	0.2	0.1	mg/L	U	0.2	Chandler	2015
Aqueous IC	Chlorobenzene	180-46921-1	0.2	0.1	mg/L	U	0.2	Los Angeles	2015
APW Bulk	Chlorobenzene	180-47817-1	0.2	0.1	mg/L	U	0.2	Highland	2015
APW Bulk	Chlorobenzene	180-46604-1	0.2	0.1	mg/L	U	0.2	Los Angeles	2015
APW	Chlorobenzene	180-52260-1	0.2	0.1	mg/L	U	0.2	Santa Ana	2015
APW	Chlorobenzene	180-52525-1	0.2	0.1	mg/L	U	0.2	Boise	2016
APW	Chlorobenzene	180-57948-2	0.2	0.1	mg/L	U	0.2	Los Angeles	2016
APW	Chlorobenzene	180-58632-1	0.2	0.1	mg/L	U	0.2	Sacramento	2016
APW	Chlorobenzene	180-58151-1	0.2	0.1	mg/L	U	0.2	Santa Ana	2016
Aqueous IC	Chlorobenzene	180-57955-1	0.2	0.1	mg/L	U	0.2	Los Angeles	2016
Aqueous IC	Chlorobenzene	180-58633-1	0.2	0.1	mg/L	U	0.2	Sacramento	2016
APW Bulk Tank	Chlorobenzene	180-58407-1	0.2	0.1	mg/L	U	0.2	Fresno	2016
APW Bulk Tank	Chlorobenzene	180-58654-1	0.2	0.1	mg/L	U	0.2	Highland	2016
APW Bulk Tank	Chlorobenzene	180-57950-2	0.2	0.1	mg/L	U	0.2	Los Angeles	2016
APW Bulk Tank	Chlorobenzene	180-58626-1	0.2	0.1	mg/L	U	0.2	Sacramento	2016
APW Bulk Tank	Chlorobenzene	180-58156-1	0.2	0.1	mg/L	U	0.2	Santa Ana	2016
APW	Chlorobenzene	180-66778-1	0.2	0.1	mg/L	U	0.2	Boise	2017

APW	Chlorobenzene	180-64610-1	0.2	0.1	mg/L	U	0.2			Chandler	2017
APW	Chlorobenzene	180-68411-1	0.2	0.1	mg/L	U	0.2			Los Angeles	2017
APW	Chlorobenzene	180-70635-1	0.2	0.1	mg/L	U	0.2			Salisbury	2017
APW	Chlorobenzene	180-67799-1	0.2	0.1	mg/L	U	0.2	47	78	Santa Ana	2017
APW	Chlorobenzene	180-64793-1	0.2	0.1	mg/L	U	0.2			Wichita	2017
APW	Chlorobenzene	180-70452-1	0.2	0.1	mg/L	U	0.2			Sacramento	2017
APW Bulk Tank	Chlorobenzene	180-68412-1	0.2	0.1	mg/L	U	0.2			Los Angeles	2017
APW Bulk Tank	Chlorobenzene	180-70449-1	0.2	0.1	mg/L	U	0.2			Sacramento	2017
Aqueous IC	Chlorobenzene	180-67798-1	0.2	0.1	mg/L	U	0.2			Santa Ana	2017
APW	Chlorobenzene	180-77402-1	0.2	0.1	mg/L	U	0.2			Boise	2018
APW	Chlorobenzene	180-76916-1	0.2	0.1	mg/L	U	0.2			Chandler	2018
APW	Chlorobenzene	180-82402-1	0.2	0.1	mg/L	U	0.2			Clackamas	2018
APW	Chlorobenzene	180-79848-1	0.2	0.1	mg/L	U	0.2			Los Angeles	2018
APW	Chlorobenzene	180-79774-1	0.2	0.1	mg/L	U	0.2			Oklahoma City	2018
APW	Chlorobenzene	180-81361-1	0.2	0.1	mg/L	U	0.2			Salisbury	2018
APW	Chlorobenzene	180-76918-1	0.2	0.1	mg/L	U	0.2			Salt Lake City	2018
APW	Chlorobenzene	180-78618-1	0.2	0.1	mg/L	U	0.2			Santa Ana	2018
APW	Chlorobenzene	180-76205-1	0.2	0.1	mg/L	U	0.2			Wichita	2018
APW Bulk Tank	Chlorobenzene	180-79850-2	0.2	0.1	mg/L	U	0.2			Los Angeles	2018
APW Bulk Tank	Chlorobenzene	180-78615-1	0.2	0.1	mg/L	U	0.2			Santa Ana	2018
APW Bulk Tank	Chlorobenzene	180-71593-1	0.2	0.1	mg/L	U	0.2			Santa Ana	2018
Aqueous IC	Chlorobenzene	180-80856-1	0.2	0.1	mg/L	U	0.2			Sacramento	2018
Aqueous IC	Chlorobenzene	180-82080-2	0.2	0.1	mg/L	U	0.2			Santa Ana	2018
Aqueous IC	Chlorobenzene	180-23587-1	0.25	0.125	mg/L	U	0.25			Highland	2013
Aqueous IC	Chlorobenzene	180-1133-2	0.5	0.25	mg/L	U	0.5			Sacramento	2011
Aqueous IC	Chlorobenzene	180-1863-2	0.5	0.25	mg/L	U	0.5			Santa Ana	2011
Aqueous IC	Chlorobenzene	180-1930-2	0.5	0.25	mg/L	U	0.5			Los Angeles	2011
Aqueous IC	Chlorobenzene	180-1963-1	0.5	0.25	mg/L	U	0.5			Highland	2011
Aqueous IC	Chlorobenzene	180-23567-1	0.5	0.25	mg/L	U	0.5			Los Angeles	2013
APW Bulk Tank	Chlorobenzene	180-25297-1	0.5	0.25	mg/L	U	0.5			El Monte	2013
APW Bulk Tank	Chlorobenzene	180-34895-1	0.5	0.25	mg/L	U	0.5			Santa Ana	2014
Aqueous IC	Chlorobenzene	180-34938-2	0.5	0.25	mg/L	U	0.5			Santa Ana	2014
Aqueous IC	Chlorobenzene	180-52258-1	0.5	0.25	mg/L	U	0.5			Santa Ana	2015
APW	Chlorobenzene	180-80854-1	4	2	mg/L	U	4			Sacramento	2018

Aqueous IC	Chlorobenzene	180-25755-1	40	20	mg/L	U	40	Santa Ana	2013
APW	Chloroform	180-1123-1	0.2	0.1	mg/L	U	0.2	Sacramento	2011
APW	Chloroform	180-1933-1	0.2	0.1	mg/L	U	0.2	Los Angeles	2011
APW	Chloroform	180-1862-1	0.2	0.1	mg/L	U	0.2	Santa Ana	2011
APW	Chloroform	180-1957-1	0.2	0.1	mg/L	U	0.2	Fresno	2011
APW	Chloroform	180-1961-1	0.2	0.1	mg/L	U	0.2	Highland	2011
APW Bulk	Chloroform	180-1968-1	0.2	0.1	mg/L	U	0.2	El Monte	2011
APW	Chloroform	180-12869-1	0.2	0.1	mg/L	U	0.2	Los Angeles	2012
APW	Chloroform	180-13030-1	0.2	0.1	mg/L	U	0.2	Highland	2012
APW	Chloroform	180-13997-1	0.2	0.1	mg/L	U	0.2	Highland	2012
APW	Chloroform	180-12870-1	0.2	0.1	mg/L	U	0.2	Fresno	2012
APW	Chloroform	180-11964-1	0.2	0.1	mg/L	U	0.2	Sacramento	2012
Aqueous IC	Chloroform	180-11264-1	0.2	0.1	mg/L	U	0.2	Santa Ana	2012
Aqueous IC	Chloroform	180-11971-1	0.2	0.1	mg/L	U	0.2	Sacramento	2012
APW	Chloroform	180-23542-1	0.2	0.1	mg/L	U	0.2	Fresno	2013
APW	Chloroform	180-23543-1	0.2	0.1	mg/L	U	0.2	Highland	2013
APW	Chloroform	180-23540-1	0.2	0.1	mg/L	U	0.2	Los Angeles	2013
APW	Chloroform	180-25501-1	0.2	0.1	mg/L	U	0.2	Sacramento	2013
APW Bulk Tank	Chloroform	180-35276-1	0.2	0.1	mg/L	U	0.2	Highland	2014
APW Bulk Tank	Chloroform	180-35141-1	0.2	0.1	mg/L	U	0.2	Los Angeles	2014
Aqueous IC	Chloroform	180-35277-1	0.2	0.1	mg/L	U	0.2	Los Angeles	2014
APW	Chloroform	180-35960-2	0.2	0.1	mg/L	U	0.2	Sacramento	2014
APW	Chloroform	180-38298-1	0.2	0.1	mg/L	U	0.2	Boise	2014
APW	Chloroform	180-39595-1	0.2	0.1	mg/L	U	0.2	Fresno	2014
APW	Chloroform	180-42909-1	0.2	0.1	mg/L	U	0.2	Boise	2015
APW	Chloroform	180-49157-1	0.2	0.1	mg/L	U	0.2	Sacramento	2015
Aqueous IC	Chloroform	180-42424-1	0.2	0.1	mg/L	U	0.2	Chandler	2015
Aqueous IC	Chloroform	180-46921-1	0.2	0.1	mg/L	U	0.2	Los Angeles	2015
APW Bulk	Chloroform	180-47817-1	0.2	0.1	mg/L	U	0.2	Highland	2015
APW Bulk	Chloroform	180-46604-1	0.2	0.1	mg/L	U	0.2	Los Angeles	2015
APW	Chloroform	180-52260-1	0.2	0.1	mg/L	U	0.2	Santa Ana	2015
APW Bulk Tank	Chloroform	180-49517-1	0.2	0.1	mg/L	U	0.2	Fresno	2015
APW	Chloroform	180-52525-1	0.2	0.1	mg/L	U	0.2	Boise	2016
APW	Chloroform	180-57948-2	0.2	0.1	mg/L	U	0.2	Los Angeles	2016

APW	Chloroform	180-58632-1	0.2	0.1	mg/L	U	0.2			Sacramento	2016
APW	Chloroform	180-58151-1	0.2	0.1	mg/L	U	0.2			Santa Ana	2016
Aqueous IC	Chloroform	180-57955-1	0.2	0.1	mg/L	U	0.2			Los Angeles	2016
Aqueous IC	Chloroform	180-58633-1	0.2	0.1	mg/L	U	0.2			Sacramento	2016
APW Bulk Tank	Chloroform	180-58407-1	0.2	0.1	mg/L	U	0.2			Fresno	2016
APW Bulk Tank	Chloroform	180-58654-1	0.2	0.1	mg/L	U	0.2			Highland	2016
APW Bulk Tank	Chloroform	180-57950-2	0.2	0.1	mg/L	U	0.2			Los Angeles	2016
APW Bulk Tank	Chloroform	180-58626-1	0.2	0.1	mg/L	U	0.2			Sacramento	2016
APW Bulk Tank	Chloroform	180-58156-1	0.2	0.1	mg/L	U	0.2			Santa Ana	2016
APW	Chloroform	180-66778-1	0.2	0.1	mg/L	U	0.2			Boise	2017
APW	Chloroform	180-68411-1	0.2	0.1	mg/L	U	0.2			Los Angeles	2017
APW	Chloroform	180-70635-1	0.2	0.1	mg/L	U	0.2			Salisbury	2017
APW	Chloroform	180-67799-1	0.2	0.1	mg/L	U	0.2			Santa Ana	2017
APW	Chloroform	180-64793-1	0.2	0.1	mg/L	U	0.2	47	78	Wichita	2017
APW	Chloroform	180-70452-1	0.2	0.1	mg/L	U	0.2			Sacramento	2017
APW Bulk Tank	Chloroform	180-68412-1	0.2	0.1	mg/L	U	0.2			Los Angeles	2017
APW Bulk Tank	Chloroform	180-70449-1	0.2	0.1	mg/L	U	0.2			Sacramento	2017
Aqueous IC	Chloroform	180-67798-1	0.2	0.1	mg/L	U	0.2			Santa Ana	2017
APW	Chloroform	180-77402-1	0.2	0.1	mg/L	U	0.2			Boise	2018
APW	Chloroform	180-76916-1	0.2	0.1	mg/L	U	0.2			Chandler	2018
APW	Chloroform	180-82402-1	0.2	0.1	mg/L	U	0.2			Clackamas	2018
APW	Chloroform	180-79848-1	0.2	0.1	mg/L	U	0.2			Los Angeles	2018
APW	Chloroform	180-79774-1	0.2	0.1	mg/L	U	0.2			Oklahoma City	2018
APW	Chloroform	180-81361-1	0.2	0.1	mg/L	U F2 F1	0.2			Salisbury	2018
APW	Chloroform	180-76918-1	0.2	0.1	mg/L	U	0.2			Salt Lake City	2018
APW	Chloroform	180-78618-1	0.2	0.1	mg/L	U	0.2			Santa Ana	2018
APW	Chloroform	180-76205-1	0.2	0.1	mg/L	U	0.2			Wichita	2018
APW Bulk Tank	Chloroform	180-79850-2	0.2	0.1	mg/L	U	0.2			Los Angeles	2018
APW Bulk Tank	Chloroform	180-78615-1	0.2	0.1	mg/L	U	0.2			Santa Ana	2018
APW Bulk Tank	Chloroform	180-71593-1	0.2	0.1	mg/L	U	0.2			Santa Ana	2018
Aqueous IC	Chloroform	180-80856-1	0.2	0.1	mg/L	U	0.2			Sacramento	2018
Aqueous IC	Chloroform	180-82080-2	0.2	0.1	mg/L	U	0.2			Santa Ana	2018
APW	Chloroform	180-64610-1	0.15	0.15	mg/L	J	0.2			Chandler	2017
Aqueous IC	Chloroform	180-23587-1	1	0.5	mg/L	U	1			Highland	2013

Aqueous IC	Chloroform	180-1133-2	2	1	mg/L	U	2	Sacramento	2011
Aqueous IC	Chloroform	180-1863-2	2	1	mg/L	U	2	Santa Ana	2011
Aqueous IC	Chloroform	180-1930-2	2	1	mg/L	U	2	Los Angeles	2011
Aqueous IC	Chloroform	180-1963-1	2	1	mg/L	U	2	Highland	2011
Aqueous IC	Chloroform	180-23567-1	2	1	mg/L	U	2	Los Angeles	2013
APW Bulk Tank	Chloroform	180-25297-1	2	1	mg/L	U	2	El Monte	2013
APW Bulk Tank	Chloroform	180-34895-1	2	1	mg/L	U	2	Santa Ana	2014
Aqueous IC	Chloroform	180-34938-2	2	1	mg/L	U	2	Santa Ana	2014
Aqueous IC	Chloroform	180-52258-1	2	1	mg/L	U	2	Santa Ana	2015
APW	Chloroform	180-80854-1	4	2	mg/L	U	4	Sacramento	2018
Aqueous IC	Chloroform	180-25755-1	40	20	mg/L	U	40	Santa Ana	2013
APW	Chromium	180-57948-2	0.0066	0.0066	mg/L	J	0.5	Los Angeles	2016
APW Bulk Tank	Chromium	180-58654-1	0.0067	0.0067	mg/L	J	0.5	Highland	2016
Aqueous IC	Chromium	180-25755-1	0.0081	0.0081	mg/L	J	0.05	Santa Ana	2013
APW Bulk Tank	Chromium	180-71593-1	0.0086	0.0086	mg/L	J	0.5	Santa Ana	2018
Aqueous IC	Chromium	180-35277-1	0.011	0.011	mg/L	J	0.05	Los Angeles	2014
Aqueous IC	Chromium	180-57955-1	0.011	0.011	mg/L	J	0.05	Los Angeles	2016
APW	Chromium	180-64610-1	0.012	0.012	mg/L	J	0.05	Chandler	2017
APW Bulk Tank	Chromium	180-49517-1	0.013	0.013	mg/L	J	0.5	Fresno	2015
APW	Chromium	180-64793-1	0.013	0.013	mg/L	J	0.05	Wichita	2017
APW Bulk Tank	Chromium	180-57950-2	0.015	0.015	mg/L	J	0.5	Los Angeles	2016
APW	Chromium	180-49157-1	0.016	0.016	mg/L	J	0.05	Sacramento	2015
Aqueous IC	Chromium	180-11264-1	0.017	0.017	mg/L	J	0.05	Santa Ana	2012
APW	Chromium	180-42909-1	0.017	0.017	mg/L	J	0.05	Boise	2015
APW	Chromium	180-81361-1	0.017	0.017	mg/L	J	0.05	Salisbury	2018
APW	Chromium	180-23543-1	0.018	0.018	mg/L	J	0.05	Highland	2013
APW	Chromium	180-25501-1	0.018	0.018	mg/L	J	0.05	Sacramento	2013
APW	Chromium	180-11964-1	0.019	0.019	mg/L	J	0.05	Sacramento	2012
Aqueous IC	Chromium	180-80856-1	0.019	0.019	mg/L	J	0.05	Sacramento	2018
Aqueous IC	Chromium	180-1930-1	0.021	0.021	mg/L	J	0.05	Los Angeles	2011
APW	Chromium	180-12870-1	0.021	0.021	mg/L	J	0.05	Fresno	2012
APW	Chromium	180-70452-1	0.024	0.024	mg/L	J	0.05	Sacramento	2017
Aqueous IC	Chromium	180-1863-1	0.025	0.025	mg/L	J	0.05	Santa Ana	2011
Aqueous IC	Chromium	180-1133-1	0.05	0.025	mg/L	U	0.05	Sacramento	2011

Aqueous IC	Chromium	180-42424-1	0.05	0.025	mg/L	U	0.05			Chandler	2015
APW	Chromium	180-1862-1	0.026	0.026	mg/L	J	0.05			Santa Ana	2011
Aqueous IC	Chromium	180-23567-2	0.026	0.026	mg/L	J	0.05			Los Angeles	2013
APW	Chromium	180-1957-1	0.028	0.028	mg/L	J	0.05			Fresno	2011
APW Bulk Tank	Chromium	180-58407-1	0.028	0.028	mg/L	J	0.5			Fresno	2016
APW	Chromium	180-1123-1	0.029	0.029	mg/L	J	0.05			Sacramento	2011
APW	Chromium	180-80854-1	0.03	0.03	mg/L	J	0.05			Sacramento	2018
APW	Chromium	180-39595-1	0.031	0.031	mg/L	J	0.05			Fresno	2014
APW	Chromium	180-77402-1	0.031	0.031	mg/L	J B	0.05			Boise	2018
APW	Chromium	180-79848-1	0.031	0.031	mg/L	J	0.05			Los Angeles	2018
APW	Chromium	180-78618-1	0.031	0.031	mg/L	J	0.05			Santa Ana	2018
APW	Chromium	180-12869-1	0.033	0.033	mg/L	J	0.05			Los Angeles	2012
APW Bulk Tank	Chromium	180-68412-1	0.037	0.037	mg/L	J	0.05			Los Angeles	2017
APW	Chromium	180-35960-2	0.038	0.038	mg/L	J	0.1			Sacramento	2014
APW	Chromium	180-13030-1	0.04	0.04	mg/L	J	0.05			Highland	2012
APW	Chromium	180-23540-1	0.043	0.043	mg/L	J	0.05			Los Angeles	2013
APW	Chromium	180-58632-1	0.043	0.043	mg/L	J	0.25			Sacramento	2016
APW	Chromium	180-52260-1	0.044	0.044	mg/L	J	0.05			Santa Ana	2015
Aqueous IC	Chromium	180-52258-2	0.046	0.046	mg/L	J	0.1			Santa Ana	2015
APW	Chromium	180-76918-1	0.05	0.05	mg/L		0.05			Salt Lake City	2018
Aqueous IC	Chromium	180-11971-1	0.053	0.053	mg/L		0.05			Sacramento	2012
APW Bulk Tank	Chromium	180-35141-1	0.053	0.053	mg/L	J	0.1			Los Angeles	2014
Aqueous IC	Chromium	180-82080-2	0.053	0.053	mg/L		0.05			Santa Ana	2018
APW Bulk Tank	Chromium	180-58156-1	0.056	0.056	mg/L		0.05	47	78	Santa Ana	2016
APW Bulk Tank	Chromium	180-78615-1	0.057	0.057	mg/L		0.05			Santa Ana	2018
APW Bulk Tank	Chromium	180-79850-2	0.066	0.066	mg/L		0.05			Los Angeles	2018
APW	Chromium	180-52525-1	0.069	0.069	mg/L		0.05			Boise	2016
APW Bulk	Chromium	180-46604-1	0.079	0.079	mg/L	J	0.1			Los Angeles	2015
APW	Chromium	180-1961-1	0.08	0.08	mg/L		0.05			Highland	2011
APW	Chromium	180-76205-1	0.1	0.1	mg/L		0.05			Wichita	2018
APW	Chromium	180-13997-1	0.11	0.11	mg/L	B	0.05			Highland	2012
Aqueous IC	Chromium	180-23587-1	0.11	0.11	mg/L	J	0.49			Highland	2013
APW	Chromium	180-58151-1	0.11	0.11	mg/L		0.05			Santa Ana	2016
APW Bulk Tank	Chromium	180-70449-1	0.11	0.11	mg/L		0.05			Sacramento	2017

APW	Chromium	180-79774-1	0.11	0.11	mg/L		0.05	Oklahoma City	2018
Aqueous IC	Chromium	180-46921-1	0.25	0.125	mg/L	U	0.25	Los Angeles	2015
Aqueous IC	Chromium	180-1963-2	0.14	0.14	mg/L		0.05	Highland	2011
APW	Chromium	180-23542-1	0.14	0.14	mg/L		0.05	Fresno	2013
APW	Chromium	180-76916-1	0.14	0.14	mg/L		0.05	Chandler	2018
APW	Chromium	180-70635-1	0.15	0.15	mg/L		0.05	Salisbury	2017
APW	Chromium	180-82402-1	0.15	0.15	mg/L		0.05	Clackamas	2018
APW	Chromium	180-68411-1	0.25	0.25	mg/L		0.05	Los Angeles	2017
APW Bulk Tank	Chromium	180-25297-1	0.5	0.25	mg/L	U	0.5	El Monte	2013
APW Bulk Tank	Chromium	180-34895-1	0.5	0.25	mg/L	U	0.5	Santa Ana	2014
Aqueous IC	Chromium	180-34938-1	0.5	0.25	mg/L	U	0.5	Santa Ana	2014
APW Bulk	Chromium	180-47817-1	0.5	0.25	mg/L	U	0.5	Highland	2015
APW Bulk Tank	Chromium	180-58626-1	0.5	0.25	mg/L	U	0.5	Sacramento	2016
Aqueous IC	Chromium	180-58633-1	0.36	0.36	mg/L		0.25	Sacramento	2016
APW Bulk Tank	Chromium	180-35276-1	0.45	0.45	mg/L		0.05	Highland	2014
APW	Chromium	180-67799-1	0.56	0.56	mg/L		0.05	Santa Ana	2017
Aqueous IC	Chromium	180-67798-1	0.6	0.6	mg/L		0.05	Santa Ana	2017
APW	Chromium	180-1933-1	0.85	0.85	mg/L		0.05	Los Angeles	2011
APW Bulk	Chromium	180-1968-1	8.8	8.8	mg/L		0.05	El Monte	2011
APW	Chromium	180-66778-1	100	100	mg/L		0.25	Boise	2017
APW	Chromium	180-38298-1	540	540	mg/L		0.25	Boise	2014
APW	Flashpoint	180-1123-1	>200	>200	Degrees F			Sacramento	2011
Aqueous IC	Flashpoint	180-1133-1	>200	>200	Degrees F			Sacramento	2011
APW	Flashpoint	180-1933-1	>200	>200	Degrees F			Los Angeles	2011
APW	Flashpoint	180-1862-1	>200	>200	Degrees F			Santa Ana	2011
Aqueous IC	Flashpoint	180-1863-1	>200	>200	Degrees F			Santa Ana	2011
Aqueous IC	Flashpoint	180-1930-1	>200	>200	Degrees F			Los Angeles	2011
APW	Flashpoint	180-1957-1	>200	>200	Degrees F			Fresno	2011
APW	Flashpoint	180-1961-1	>200	>200	Degrees F			Highland	2011
Aqueous IC	Flashpoint	180-1963-2	>200	>200	Degrees F			Highland	2011
APW Bulk	Flashpoint	180-1968-1	>200	>200	Degrees F			El Monte	2011
APW	Flashpoint	180-12869-1	>200	>200	Degrees F			Los Angeles	2012
APW	Flashpoint	180-13997-1	>200	>200	Degrees F			Highland	2012
APW	Flashpoint	180-12870-1	>200	>200	Degrees F			Fresno	2012

APW	Flashpoint	180-11964-1	>200	>200	Degrees F				Sacramento	2012
Aqueous IC	Flashpoint	180-11264-1	>200	>200	Degrees F				Santa Ana	2012
Aqueous IC	Flashpoint	180-11971-1	>200	>200	Degrees F				Sacramento	2012
APW	Flashpoint	180-23542-1	>200	>200	Degrees F				Fresno	2013
APW	Flashpoint	180-23543-1	>200	>200	Degrees F				Highland	2013
Aqueous IC	Flashpoint	180-23587-1	>200	>200	Degrees F				Highland	2013
APW	Flashpoint	180-23540-1	>200	>200	Degrees F				Los Angeles	2013
Aqueous IC	Flashpoint	180-23567-2	>200	>200	Degrees F				Los Angeles	2013
APW	Flashpoint	180-25501-1	>200	>200	Degrees F				Sacramento	2013
Aqueous IC	Flashpoint	180-25755-1	>200	>200	Degrees F				Santa Ana	2013
APW Bulk Tank	Flashpoint	180-25297-1	>200	>200	Degrees F	1			El Monte	2013
APW Bulk Tank	Flashpoint	180-35276-1	>200	>200	Degrees F	1			Highland	2014
APW Bulk Tank	Flashpoint	180-35141-1	>200	>200	Degrees F	1			Los Angeles	2014
Aqueous IC	Flashpoint	180-35277-1	>200	>200	Degrees F	1			Los Angeles	2014
APW	Flashpoint	180-35960-2	>200	>200	Degrees F	1			Sacramento	2014
APW Bulk Tank	Flashpoint	180-34895-1	>200	>200	Degrees F	1			Santa Ana	2014
Aqueous IC	Flashpoint	180-34938-1	>200	>200	Degrees F	1			Santa Ana	2014
APW	Flashpoint	180-38298-1	>200	>200	Degrees F	1			Boise	2014
APW	Flashpoint	180-39595-1	>200	>200	Degrees F	1	47	77	Fresno	2014
APW	Flashpoint	180-49157-1	>200	>200	Degrees F	1			Sacramento	2015
APW	Flashpoint	180-52260-1	>200	>200	Degrees F	1			Santa Ana	2015
Aqueous IC	Flashpoint	180-52258-2	>200	>200	Degrees F	1			Santa Ana	2015
APW	Flashpoint	180-42909-1	>200	>200	Degrees F	1			Boise	2015
Aqueous IC	Flashpoint	180-42424-1	>200	>200	Degrees F	1			Chandler	2015
APW Bulk	Flashpoint	180-46604-1	>200	>200	Degrees F	1			Los Angeles	2015
APW	Flashpoint	180-52525-1	>200	>200	Degrees F	1			Boise	2016
APW	Flashpoint	180-58632-1	>200	>200	Degrees F	1			Sacramento	2016
APW	Flashpoint	180-58151-1	>200	>200	Degrees F	1			Santa Ana	2016
Aqueous IC	Flashpoint	180-57955-1	>200	>200	Degrees F	1			Los Angeles	2016
Aqueous IC	Flashpoint	180-58633-1	>200	>200	Degrees F	1			Sacramento	2016
APW Bulk Tank	Flashpoint	180-58156-1	>200	>200	Degrees F	1			Santa Ana	2016
APW	Flashpoint	180-67799-1	>200	>200	Degrees F	1			Santa Ana	2017
APW	Flashpoint	180-70452-1	>200	>200	Degrees F	1			Sacramento	2017
APW Bulk Tank	Flashpoint	180-70449-1	>200	>200	Degrees F	1			Sacramento	2017

Aqueous IC	Flashpoint	180-67798-1	>200	>200	Degrees F		1	Santa Ana	2017
APW	Flashpoint	180-77402-1	>200	>200	Degrees F		1	Boise	2018
APW	Flashpoint	180-76916-1	>200	>200	Degrees F		1	Chandler	2018
APW	Flashpoint	180-82402-1	>200	>200	Degrees F		1	Clackamas	2018
APW	Flashpoint	180-79848-1	>200	>200	Degrees F		1	Los Angeles	2018
APW	Flashpoint	180-79774-1	>200	>200	Degrees F		1	Oklahoma City	2018
APW	Flashpoint	180-80854-1	>200	>200	Degrees F		1	Sacramento	2018
APW	Flashpoint	180-81361-1	>200	>200	Degrees F		1	Salisbury	2018
APW	Flashpoint	180-76918-1	>200	>200	Degrees F		1	Salt Lake City	2018
APW	Flashpoint	180-78618-1	>200	>200	Degrees F		1	Santa Ana	2018
APW	Flashpoint	180-76205-1	>200	>200	Degrees F		1	Wichita	2018
APW Bulk Tank	Flashpoint	180-79850-2	>200	>200	Degrees F		1	Los Angeles	2018
APW Bulk Tank	Flashpoint	180-78615-1	>200	>200	Degrees F		1	Santa Ana	2018
Aqueous IC	Flashpoint	180-80856-1	>200	>200	Degrees F		1	Sacramento	2018
Aqueous IC	Flashpoint	180-82080-2	>200	>200	Degrees F		1	Santa Ana	2018
APW Bulk	Flashpoint	180-47817-1	>140	>140	Degrees F			Highland	2015
APW Bulk Tank	Flashpoint	180-49517-1	>140	>140	Degrees F			Fresno	2015
APW	Flashpoint	180-57948-2	>140	>140	Degrees F			Los Angeles	2016
APW Bulk Tank	Flashpoint	180-58407-1	>140	>140	Degrees F			Fresno	2016
APW Bulk Tank	Flashpoint	180-58654-1	>140	>140	Degrees F			Highland	2016
APW Bulk Tank	Flashpoint	180-57950-2	>140	>140	Degrees F			Los Angeles	2016
APW Bulk Tank	Flashpoint	180-58626-1	>140	>140	Degrees F			Sacramento	2016
APW	Flashpoint	180-66778-1	> 200	> 200	Degrees F		1	Boise	2017
APW	Flashpoint	180-64610-1	> 200	> 200	Degrees F		1	Chandler	2017
APW	Flashpoint	180-70635-1	> 200	> 200	Degrees F		1	Salisbury	2017
APW	Flashpoint	180-64793-1	> 200	> 200	Degrees F		1	Wichita	2017
APW Bulk Tank	Flashpoint	180-68412-1	> 200	> 200	Degrees F		1	Los Angeles	2017
APW	Flashpoint	180-68411-1	185	185	Degrees F		1	Los Angeles	2017
APW	Flashpoint	180-13030-2	141	141	Degrees F			Highland	2012
Aqueous IC	Flashpoint	180-46921-1	134	134	Degrees F		1	Los Angeles	2015
APW Bulk Tank	Hexachlorobenzene	180-35141-1	0.05	0.025	mg/L	U	0.05	Los Angeles	2014
APW	Hexachlorobenzene	180-35960-2	0.05	0.025	mg/L	U	0.05	Sacramento	2014
APW	Hexachlorobenzene	180-38298-1	0.05	0.025	mg/L	U	0.05	Boise	2014
APW	Hexachlorobenzene	180-39595-1	0.05	0.025	mg/L	U	0.05	Fresno	2014

APW	Hexachlorobenzene	180-49157-1	0.05	0.025	mg/L	U	0.05			Sacramento	2015
APW Bulk	Hexachlorobenzene	180-47817-1	0.05	0.025	mg/L	U	0.05			Highland	2015
APW	Hexachlorobenzene	180-52260-1	0.05	0.025	mg/L	U	0.05			Santa Ana	2015
APW Bulk Tank	Hexachlorobenzene	180-49517-1	0.05	0.025	mg/L	U	0.05			Fresno	2015
APW	Hexachlorobenzene	180-52525-1	0.05	0.025	mg/L	U	0.05			Boise	2016
APW	Hexachlorobenzene	180-57948-2	0.05	0.025	mg/L	U *	0.05			Los Angeles	2016
APW	Hexachlorobenzene	180-58632-1	0.05	0.025	mg/L	U	0.05			Sacramento	2016
Aqueous IC	Hexachlorobenzene	180-57955-1	0.05	0.025	mg/L	U	0.05			Los Angeles	2016
Aqueous IC	Hexachlorobenzene	180-58633-1	0.05	0.025	mg/L	U	0.05			Sacramento	2016
APW Bulk Tank	Hexachlorobenzene	180-58407-1	0.05	0.025	mg/L	U	0.05			Fresno	2016
APW Bulk Tank	Hexachlorobenzene	180-58654-1	0.05	0.025	mg/L	U	0.05			Highland	2016
APW Bulk Tank	Hexachlorobenzene	180-57950-2	0.05	0.025	mg/L	U *	0.05			Los Angeles	2016
APW Bulk Tank	Hexachlorobenzene	180-58626-1	0.05	0.025	mg/L	U	0.05			Sacramento	2016
APW Bulk Tank	Hexachlorobenzene	180-58156-1	0.05	0.025	mg/L	U	0.05			Santa Ana	2016
APW	Hexachlorobenzene	180-66778-1	0.05	0.025	mg/L	U	0.05			Boise	2017
APW	Hexachlorobenzene	180-64610-1	0.05	0.025	mg/L	U	0.05			Chandler	2017
APW	Hexachlorobenzene	180-68411-1	0.05	0.025	mg/L	U	0.05			Los Angeles	2017
APW	Hexachlorobenzene	180-70635-1	0.05	0.025	mg/L	U	0.05			Salisbury	2017
APW	Hexachlorobenzene	180-67799-1	0.05	0.025	mg/L	U	0.05			Santa Ana	2017
APW	Hexachlorobenzene	180-64793-1	0.05	0.025	mg/L	U *	0.05			Wichita	2017
APW	Hexachlorobenzene	180-70452-1	0.05	0.025	mg/L	U	0.05			Sacramento	2017
APW Bulk Tank	Hexachlorobenzene	180-68412-1	0.05	0.025	mg/L	U	0.05			Los Angeles	2017
APW Bulk Tank	Hexachlorobenzene	180-70449-1	0.05	0.025	mg/L	U	0.05			Sacramento	2017
Aqueous IC	Hexachlorobenzene	180-67798-1	0.05	0.025	mg/L	U	0.05			Santa Ana	2017
APW	Hexachlorobenzene	180-77402-1	0.05	0.025	mg/L	U	0.05			Boise	2018
APW	Hexachlorobenzene	180-76916-1	0.05	0.025	mg/L	U	0.05			Chandler	2018
APW	Hexachlorobenzene	180-82402-1	0.05	0.025	mg/L	U	0.05			Clackamas	2018
APW	Hexachlorobenzene	180-79848-1	0.05	0.025	mg/L	U	0.05			Los Angeles	2018
APW	Hexachlorobenzene	180-79774-1	0.05	0.025	mg/L	U	0.05	33	53	Oklahoma City	2018
APW	Hexachlorobenzene	180-80854-1	0.05	0.025	mg/L	U	0.05			Sacramento	2018
APW	Hexachlorobenzene	180-81361-1	0.05	0.025	mg/L	U	0.05			Salisbury	2018
APW	Hexachlorobenzene	180-78618-1	0.05	0.025	mg/L	U	0.05			Santa Ana	2018
APW	Hexachlorobenzene	180-76205-1	0.05	0.025	mg/L	U	0.05			Wichita	2018
APW Bulk Tank	Hexachlorobenzene	180-79850-2	0.05	0.025	mg/L	U	0.05			Los Angeles	2018

APW Bulk Tank	Hexachlorobenzene	180-78615-1	0.05	0.025	mg/L	U	0.05	Santa Ana	2018
APW Bulk Tank	Hexachlorobenzene	180-71593-1	0.05	0.025	mg/L	U	0.05	Santa Ana	2018
Aqueous IC	Hexachlorobenzene	180-80856-1	0.05	0.025	mg/L	U	0.05	Sacramento	2018
Aqueous IC	Hexachlorobenzene	180-82080-2	0.05	0.025	mg/L	U	0.05	Santa Ana	2018
APW Bulk Tank	Hexachlorobenzene	180-34895-1	0.13	0.065	mg/L	U	0.13	Santa Ana	2014
APW	Hexachlorobenzene	180-76918-1	0.2	0.1	mg/L	U	0.2	Salt Lake City	2018
Aqueous IC	Hexachlorobenzene	180-35277-1	0.25	0.125	mg/L	U	0.25	Los Angeles	2014
APW	Hexachlorobenzene	180-42909-1	0.25	0.125	mg/L	U *	0.25	Boise	2015
Aqueous IC	Hexachlorobenzene	180-42424-1	0.33	0.165	mg/L	U	0.33	Chandler	2015
APW Bulk Tank	Hexachlorobenzene	180-35276-1	0.5	0.25	mg/L	U	0.5	Highland	2014
Aqueous IC	Hexachlorobenzene	180-46921-1	0.5	0.25	mg/L	U	0.5	Los Angeles	2015
APW	Hexachlorobenzene	180-58151-1	1.3	0.65	mg/L	U	1.3	Santa Ana	2016
Aqueous IC	Hexachlorobenzene	180-34938-2	2	1	mg/L	U	2	Santa Ana	2014
Aqueous IC	Hexachlorobenzene	180-52258-1	2	1	mg/L	U	2	Santa Ana	2015
Aqueous IC	Hexachlorobenzene	180-1863-1	20	10	mg/L	U	20	Santa Ana	2011
APW Bulk Tank	Hexachlorobutadiene	180-35141-1	0.05	0.025	mg/L	U	0.05	Los Angeles	2014
APW	Hexachlorobutadiene	180-35960-2	0.05	0.025	mg/L	U	0.05	Sacramento	2014
APW	Hexachlorobutadiene	180-38298-1	0.05	0.025	mg/L	U *	0.05	Boise	2014
APW	Hexachlorobutadiene	180-39595-1	0.05	0.025	mg/L	U	0.05	Fresno	2014
APW	Hexachlorobutadiene	180-49157-1	0.05	0.025	mg/L	U	0.05	Sacramento	2015
APW Bulk	Hexachlorobutadiene	180-47817-1	0.05	0.025	mg/L	U	0.05	Highland	2015
APW	Hexachlorobutadiene	180-52260-1	0.05	0.025	mg/L	U	0.05	Santa Ana	2015
APW Bulk Tank	Hexachlorobutadiene	180-49517-1	0.05	0.025	mg/L	U	0.05	Fresno	2015
APW	Hexachlorobutadiene	180-52525-1	0.05	0.025	mg/L	U	0.05	Boise	2016
APW	Hexachlorobutadiene	180-57948-2	0.05	0.025	mg/L	U	0.05	Los Angeles	2016
APW	Hexachlorobutadiene	180-58632-1	0.05	0.025	mg/L	U	0.05	Sacramento	2016
Aqueous IC	Hexachlorobutadiene	180-57955-1	0.05	0.025	mg/L	U *	0.05	Los Angeles	2016
Aqueous IC	Hexachlorobutadiene	180-58633-1	0.05	0.025	mg/L	U	0.05	Sacramento	2016
APW Bulk Tank	Hexachlorobutadiene	180-58407-1	0.05	0.025	mg/L	U	0.05	Fresno	2016
APW Bulk Tank	Hexachlorobutadiene	180-58654-1	0.05	0.025	mg/L	U	0.05	Highland	2016
APW Bulk Tank	Hexachlorobutadiene	180-57950-2	0.05	0.025	mg/L	U	0.05	Los Angeles	2016
APW Bulk Tank	Hexachlorobutadiene	180-58626-1	0.05	0.025	mg/L	U	0.05	Sacramento	2016
APW Bulk Tank	Hexachlorobutadiene	180-58156-1	0.05	0.025	mg/L	U	0.05	Santa Ana	2016
APW	Hexachlorobutadiene	180-66778-1	0.05	0.025	mg/L	U	0.05	Boise	2017

APW	Hexachlorobutadiene	180-64610-1	0.05	0.025	mg/L	U	0.05			Chandler	2017
APW	Hexachlorobutadiene	180-68411-1	0.05	0.025	mg/L	U *	0.05			Los Angeles	2017
APW	Hexachlorobutadiene	180-70635-1	0.05	0.025	mg/L	U	0.05			Salisbury	2017
APW	Hexachlorobutadiene	180-67799-1	0.05	0.025	mg/L	U	0.05			Santa Ana	2017
APW	Hexachlorobutadiene	180-64793-1	0.05	0.025	mg/L	U *	0.05			Wichita	2017
APW	Hexachlorobutadiene	180-70452-1	0.05	0.025	mg/L	U	0.05			Sacramento	2017
APW Bulk Tank	Hexachlorobutadiene	180-68412-1	0.05	0.025	mg/L	U *	0.05			Los Angeles	2017
APW Bulk Tank	Hexachlorobutadiene	180-70449-1	0.05	0.025	mg/L	U	0.05			Sacramento	2017
Aqueous IC	Hexachlorobutadiene	180-67798-1	0.05	0.025	mg/L	U	0.05			Santa Ana	2017
APW	Hexachlorobutadiene	180-77402-1	0.05	0.025	mg/L	U	0.05			Boise	2018
APW	Hexachlorobutadiene	180-76916-1	0.05	0.025	mg/L	U	0.05			Chandler	2018
APW	Hexachlorobutadiene	180-82402-1	0.05	0.025	mg/L	U	0.05			Clackamas	2018
APW	Hexachlorobutadiene	180-79848-1	0.05	0.025	mg/L	U	0.05			Los Angeles	2018
APW	Hexachlorobutadiene	180-79774-1	0.05	0.025	mg/L	U	0.05	33	53	Oklahoma City	2018
APW	Hexachlorobutadiene	180-80854-1	0.05	0.025	mg/L	U	0.05			Sacramento	2018
APW	Hexachlorobutadiene	180-81361-1	0.05	0.025	mg/L	U	0.05			Salisbury	2018
APW	Hexachlorobutadiene	180-78618-1	0.05	0.025	mg/L	U	0.05			Santa Ana	2018
APW	Hexachlorobutadiene	180-76205-1	0.05	0.025	mg/L	U	0.05			Wichita	2018
APW Bulk Tank	Hexachlorobutadiene	180-79850-2	0.05	0.025	mg/L	U	0.05			Los Angeles	2018
APW Bulk Tank	Hexachlorobutadiene	180-78615-1	0.05	0.025	mg/L	U	0.05			Santa Ana	2018
APW Bulk Tank	Hexachlorobutadiene	180-71593-1	0.05	0.025	mg/L	U	0.05			Santa Ana	2018
Aqueous IC	Hexachlorobutadiene	180-80856-1	0.05	0.025	mg/L	U	0.05			Sacramento	2018
Aqueous IC	Hexachlorobutadiene	180-82080-2	0.05	0.025	mg/L	U *	0.05			Santa Ana	2018
APW Bulk Tank	Hexachlorobutadiene	180-34895-1	0.13	0.065	mg/L	U	0.13			Santa Ana	2014
APW	Hexachlorobutadiene	180-76918-1	0.2	0.1	mg/L	U	0.2			Salt Lake City	2018
Aqueous IC	Hexachlorobutadiene	180-35277-1	0.25	0.125	mg/L	U	0.25			Los Angeles	2014
APW	Hexachlorobutadiene	180-42909-1	0.25	0.125	mg/L	U *	0.25			Boise	2015
Aqueous IC	Hexachlorobutadiene	180-42424-1	0.33	0.165	mg/L	U	0.33			Chandler	2015
APW Bulk Tank	Hexachlorobutadiene	180-35276-1	0.5	0.25	mg/L	U	0.5			Highland	2014
Aqueous IC	Hexachlorobutadiene	180-46921-1	0.5	0.25	mg/L	U	0.5			Los Angeles	2015
APW	Hexachlorobutadiene	180-58151-1	1.3	0.65	mg/L	U	1.3			Santa Ana	2016
Aqueous IC	Hexachlorobutadiene	180-34938-2	2	1	mg/L	U	2			Santa Ana	2014
Aqueous IC	Hexachlorobutadiene	180-52258-1	2	1	mg/L	U	2			Santa Ana	2015
Aqueous IC	Hexachlorobutadiene	180-1863-1	20	10	mg/L	U	20			Santa Ana	2011

APW Bulk Tank	Hexachloroethane	180-35141-1	0.05	0.025	mg/L	U	0.05			Los Angeles	2014
APW	Hexachloroethane	180-35960-2	0.05	0.025	mg/L	U	0.05			Sacramento	2014
APW	Hexachloroethane	180-38298-1	0.05	0.025	mg/L	U	0.05			Boise	2014
APW	Hexachloroethane	180-39595-1	0.05	0.025	mg/L	U	0.05			Fresno	2014
APW	Hexachloroethane	180-49157-1	0.05	0.025	mg/L	U	0.05			Sacramento	2015
APW Bulk	Hexachloroethane	180-47817-1	0.05	0.025	mg/L	U	0.05			Highland	2015
APW	Hexachloroethane	180-52260-1	0.05	0.025	mg/L	U	0.05			Santa Ana	2015
APW Bulk Tank	Hexachloroethane	180-49517-1	0.05	0.025	mg/L	U	0.05			Fresno	2015
APW	Hexachloroethane	180-52525-1	0.05	0.025	mg/L	U	0.05			Boise	2016
APW	Hexachloroethane	180-57948-2	0.05	0.025	mg/L	U	0.05			Los Angeles	2016
APW	Hexachloroethane	180-58632-1	0.05	0.025	mg/L	U	0.05			Sacramento	2016
Aqueous IC	Hexachloroethane	180-57955-1	0.05	0.025	mg/L	U *	0.05			Los Angeles	2016
Aqueous IC	Hexachloroethane	180-58633-1	0.05	0.025	mg/L	U	0.05			Sacramento	2016
APW Bulk Tank	Hexachloroethane	180-58407-1	0.05	0.025	mg/L	U	0.05			Fresno	2016
APW Bulk Tank	Hexachloroethane	180-58654-1	0.05	0.025	mg/L	U	0.05			Highland	2016
APW Bulk Tank	Hexachloroethane	180-57950-2	0.05	0.025	mg/L	U	0.05			Los Angeles	2016
APW Bulk Tank	Hexachloroethane	180-58626-1	0.05	0.025	mg/L	U	0.05			Sacramento	2016
APW Bulk Tank	Hexachloroethane	180-58156-1	0.05	0.025	mg/L	U	0.05			Santa Ana	2016
APW	Hexachloroethane	180-66778-1	0.05	0.025	mg/L	U	0.05			Boise	2017
APW	Hexachloroethane	180-64610-1	0.05	0.025	mg/L	U	0.05			Chandler	2017
APW	Hexachloroethane	180-68411-1	0.05	0.025	mg/L	U	0.05			Los Angeles	2017
APW	Hexachloroethane	180-70635-1	0.05	0.025	mg/L	U	0.05			Salisbury	2017
APW	Hexachloroethane	180-67799-1	0.05	0.025	mg/L	U	0.05			Santa Ana	2017
APW	Hexachloroethane	180-64793-1	0.05	0.025	mg/L	U	0.05			Wichita	2017
APW	Hexachloroethane	180-70452-1	0.05	0.025	mg/L	U	0.05			Sacramento	2017
APW Bulk Tank	Hexachloroethane	180-68412-1	0.05	0.025	mg/L	U	0.05			Los Angeles	2017
APW Bulk Tank	Hexachloroethane	180-70449-1	0.05	0.025	mg/L	U	0.05			Sacramento	2017
Aqueous IC	Hexachloroethane	180-67798-1	0.05	0.025	mg/L	U	0.05			Santa Ana	2017
APW	Hexachloroethane	180-77402-1	0.05	0.025	mg/L	U	0.05			Boise	2018
APW	Hexachloroethane	180-76916-1	0.05	0.025	mg/L	U	0.05			Chandler	2018
APW	Hexachloroethane	180-82402-1	0.05	0.025	mg/L	U	0.05			Clackamas	2018
APW	Hexachloroethane	180-79848-1	0.05	0.025	mg/L	U	0.05			Los Angeles	2018
APW	Hexachloroethane	180-79774-1	0.05	0.025	mg/L	U	0.05	33	53	Oklahoma City	2018
APW	Hexachloroethane	180-80854-1	0.05	0.025	mg/L	U	0.05			Sacramento	2018

APW	Hexachloroethane	180-81361-1	0.05	0.025	mg/L	U	0.05	Salisbury	2018
APW	Hexachloroethane	180-78618-1	0.05	0.025	mg/L	U	0.05	Santa Ana	2018
APW	Hexachloroethane	180-76205-1	0.05	0.025	mg/L	U	0.05	Wichita	2018
APW Bulk Tank	Hexachloroethane	180-79850-2	0.05	0.025	mg/L	U	0.05	Los Angeles	2018
APW Bulk Tank	Hexachloroethane	180-78615-1	0.05	0.025	mg/L	U	0.05	Santa Ana	2018
APW Bulk Tank	Hexachloroethane	180-71593-1	0.05	0.025	mg/L	U	0.05	Santa Ana	2018
Aqueous IC	Hexachloroethane	180-80856-1	0.05	0.025	mg/L	U	0.05	Sacramento	2018
Aqueous IC	Hexachloroethane	180-82080-2	0.05	0.025	mg/L	U	0.05	Santa Ana	2018
APW Bulk Tank	Hexachloroethane	180-34895-1	0.13	0.065	mg/L	U	0.13	Santa Ana	2014
APW	Hexachloroethane	180-76918-1	0.2	0.1	mg/L	U	0.2	Salt Lake City	2018
Aqueous IC	Hexachloroethane	180-35277-1	0.25	0.125	mg/L	U	0.25	Los Angeles	2014
APW	Hexachloroethane	180-42909-1	0.25	0.125	mg/L	U	0.25	Boise	2015
Aqueous IC	Hexachloroethane	180-42424-1	0.33	0.165	mg/L	U	0.33	Chandler	2015
APW Bulk Tank	Hexachloroethane	180-35276-1	0.5	0.25	mg/L	U	0.5	Highland	2014
Aqueous IC	Hexachloroethane	180-46921-1	0.5	0.25	mg/L	U	0.5	Los Angeles	2015
APW	Hexachloroethane	180-58151-1	1.3	0.65	mg/L	U	1.3	Santa Ana	2016
Aqueous IC	Hexachloroethane	180-34938-2	2	1	mg/L	U	2	Santa Ana	2014
Aqueous IC	Hexachloroethane	180-52258-1	2	1	mg/L	U	2	Santa Ana	2015
Aqueous IC	Hexachloroethane	180-1863-1	100	50	mg/L	U	100	Santa Ana	2011
APW Bulk Tank	Ignitability	180-71593-1	>140	>140	Degrees F			Santa Ana	2018
APW	Lead	180-23543-1	0.013	0.013	mg/L	J	0.03	Highland	2013
Aqueous IC	Lead	180-23567-2	0.013	0.013	mg/L	J	0.03	Los Angeles	2013
Aqueous IC	Lead	180-42424-1	0.015	0.015	mg/L	J	0.1	Chandler	2015
Aqueous IC	Lead	180-1133-1	0.03	0.015	mg/L	U	0.03	Sacramento	2011
APW	Lead	180-1862-1	0.03	0.015	mg/L	U	0.03	Santa Ana	2011
APW	Lead	180-11964-1	0.03	0.015	mg/L	U	0.03	Sacramento	2012
APW	Lead	180-23540-1	0.033	0.033	mg/L		0.03	Los Angeles	2013
APW	Lead	180-58151-1	0.044	0.044	mg/L	J	0.1	Santa Ana	2016
APW	Lead	180-1957-1	0.048	0.048	mg/L		0.03	Fresno	2011
Aqueous IC	Lead	180-25755-1	0.1	0.05	mg/L	U	0.1	Santa Ana	2013
Aqueous IC	Lead	180-35277-1	0.1	0.05	mg/L	U	0.1	Los Angeles	2014
APW	Lead	180-39595-1	0.1	0.05	mg/L	U	0.1	Fresno	2014
APW	Lead	180-42909-1	0.1	0.05	mg/L	U	0.1	Boise	2015
APW	Lead	180-49157-1	0.1	0.05	mg/L	U	0.1	Sacramento	2015

Aqueous IC	Lead	180-57955-1	0.1	0.05	mg/L	U	0.1			Los Angeles	2016
APW	Lead	180-64610-1	0.1	0.05	mg/L	U	0.1			Chandler	2017
APW	Lead	180-64793-1	0.1	0.05	mg/L	U	0.1			Wichita	2017
APW	Lead	180-77402-1	0.05	0.05	mg/L	J	0.1			Boise	2018
APW	Lead	180-76916-1	0.1	0.05	mg/L	U	0.1			Chandler	2018
APW Bulk Tank	Lead	180-58626-1	0.052	0.052	mg/L	J	0.5			Sacramento	2016
APW	Lead	180-78618-1	0.052	0.052	mg/L	J	0.1			Santa Ana	2018
APW	Lead	180-70452-1	0.065	0.065	mg/L	J	0.1			Sacramento	2017
Aqueous IC	Lead	180-11264-1	0.069	0.069	mg/L		0.03			Santa Ana	2012
APW Bulk Tank	Lead	180-71593-1	0.071	0.071	mg/L	J	0.5			Santa Ana	2018
Aqueous IC	Lead	180-80856-1	0.078	0.078	mg/L	J	0.1			Sacramento	2018
Aqueous IC	Lead	180-1930-1	0.091	0.091	mg/L		0.03			Los Angeles	2011
APW	Lead	180-1961-1	0.094	0.094	mg/L		0.03			Highland	2011
APW	Lead	180-79774-1	0.097	0.097	mg/L	J	0.1			Oklahoma City	2018
APW Bulk Tank	Lead	180-70449-1	0.12	0.12	mg/L		0.1			Sacramento	2017
APW	Lead	180-82402-1	0.15	0.15	mg/L		0.1			Clackamas	2018
APW	Lead	180-25501-1	0.16	0.16	mg/L		0.03			Sacramento	2013
APW	Lead	180-52260-1	0.17	0.17	mg/L		0.1			Santa Ana	2015
APW	Lead	180-70635-1	0.17	0.17	mg/L		0.1			Salisbury	2017
APW	Lead	180-79848-1	0.17	0.17	mg/L		0.1			Los Angeles	2018
APW	Lead	180-13997-1	0.19	0.19	mg/L		0.03			Highland	2012
APW	Lead	180-12870-1	0.19	0.19	mg/L		0.03			Fresno	2012
APW	Lead	180-52525-1	0.19	0.19	mg/L		0.1			Boise	2016
APW	Lead	180-38298-1	0.2	0.2	mg/L	J	0.5			Boise	2014
Aqueous IC	Lead	180-67798-1	0.2	0.2	mg/L		0.1			Santa Ana	2017
APW	Lead	180-1123-1	0.21	0.21	mg/L		0.03			Sacramento	2011
APW Bulk Tank	Lead	180-35276-1	0.21	0.21	mg/L		0.1			Highland	2014
Aqueous IC	Lead	180-1963-2	0.22	0.22	mg/L		0.03			Highland	2011
APW	Lead	180-58632-1	0.22	0.22	mg/L	J	0.5			Sacramento	2016
APW	Lead	180-68411-1	0.23	0.23	mg/L		0.1			Los Angeles	2017
APW Bulk Tank	Lead	180-49517-1	0.25	0.25	mg/L	J	0.5			Fresno	2015
APW Bulk	Lead	180-47817-1	0.5	0.25	mg/L	U	0.5			Highland	2015
APW	Lead	180-57948-2	0.5	0.25	mg/L	U	0.5	47	78	Los Angeles	2016
Aqueous IC	Lead	180-58633-1	0.5	0.25	mg/L	U	0.5			Sacramento	2016

APW Bulk Tank	Lead	180-58407-1	0.5	0.25	mg/L	U	0.5	Fresno	2016
APW Bulk Tank	Lead	180-58654-1	0.5	0.25	mg/L	U	0.5	Highland	2016
APW	Lead	180-66778-1	0.5	0.25	mg/L	U	0.5	Boise	2017
APW	Lead	180-67799-1	0.28	0.28	mg/L		0.1	Santa Ana	2017
APW	Lead	180-76205-1	0.29	0.29	mg/L		0.1	Wichita	2018
Aqueous IC	Lead	180-52258-2	0.3	0.3	mg/L		0.2	Santa Ana	2015
Aqueous IC	Lead	180-23587-1	0.31	0.31	mg/L		0.29	Highland	2013
APW Bulk Tank	Lead	180-68412-1	0.34	0.34	mg/L		0.1	Los Angeles	2017
Aqueous IC	Lead	180-82080-2	0.35	0.35	mg/L		0.1	Santa Ana	2018
Aqueous IC	Lead	180-46921-1	0.37	0.37	mg/L	J	0.5	Los Angeles	2015
APW	Lead	180-23542-1	0.41	0.41	mg/L		0.03	Fresno	2013
APW	Lead	180-13030-1	0.44	0.44	mg/L		0.03	Highland	2012
APW Bulk Tank	Lead	180-57950-2	0.44	0.44	mg/L	J	0.5	Los Angeles	2016
APW Bulk	Lead	180-46604-1	0.45	0.45	mg/L		0.2	Los Angeles	2015
Aqueous IC	Lead	180-34938-1	1	0.5	mg/L	U	1	Santa Ana	2014
APW Bulk Tank	Lead	180-78615-1	0.64	0.64	mg/L		0.1	Santa Ana	2018
APW Bulk Tank	Lead	180-25297-1	0.73	0.73	mg/L		0.3	El Monte	2013
APW	Lead	180-35960-2	0.76	0.76	mg/L		0.2	Sacramento	2014
APW Bulk Tank	Lead	180-35141-1	0.79	0.79	mg/L		0.2	Los Angeles	2014
APW	Lead	180-81361-1	0.8	0.8	mg/L		0.1	Salisbury	2018
APW	Lead	180-12869-1	0.84	0.84	mg/L		0.03	Los Angeles	2012
Aqueous IC	Lead	180-1863-1	0.97	0.97	mg/L		0.03	Santa Ana	2011
APW Bulk Tank	Lead	180-58156-1	1.1	1.1	mg/L		0.1	Santa Ana	2016
APW Bulk Tank	Lead	180-34895-1	1.2	1.2	mg/L		1	Santa Ana	2014
APW	Lead	180-80854-1	1.2	1.2	mg/L		0.1	Sacramento	2018
APW Bulk Tank	Lead	180-79850-2	1.5	1.5	mg/L		0.1	Los Angeles	2018
Aqueous IC	Lead	180-11971-1	1.6	1.6	mg/L		0.03	Sacramento	2012
APW	Lead	180-1933-1	6	6	mg/L		0.03	Los Angeles	2011
APW	Lead	180-76918-1	20	20	mg/L		0.1	Salt Lake City	2018
APW Bulk	Lead	180-1968-1	44	44	mg/L		0.03	El Monte	2011
APW	Mercury	180-70635-1	0.000075	0.000075	mg/L	J	0.0002	Salisbury	2017
APW Bulk	Mercury	180-47817-1	0.0002	0.0001	mg/L	U	0.0002	Highland	2015
APW Bulk Tank	Mercury	180-49517-1	0.0002	0.0001	mg/L	U	0.0002	Fresno	2015
APW	Mercury	180-57948-2	0.0002	0.0001	mg/L	U	0.0002	Los Angeles	2016

APW Bulk Tank	Mercury	180-58407-1	0.0002	0.0001	mg/L	U	0.0002	Fresno	2016
APW Bulk Tank	Mercury	180-58654-1	0.0002	0.0001	mg/L	U	0.0002	Highland	2016
APW Bulk Tank	Mercury	180-57950-2	0.0002	0.0001	mg/L	U	0.0002	Los Angeles	2016
APW Bulk Tank	Mercury	180-58626-1	0.0002	0.0001	mg/L	U	0.0002	Sacramento	2016
APW	Mercury	180-79774-1	0.0002	0.0001	mg/L	U	0.0002	Oklahoma City	2018
APW Bulk Tank	Mercury	180-71593-1	0.0002	0.0001	mg/L	U	0.0002	Santa Ana	2018
APW Bulk Tank	Mercury	180-58156-1	0.00052	0.00052	mg/L	J	0.002	Santa Ana	2016
APW	Mercury	180-23542-1	0.00074	0.00074	mg/L	J B	0.002	Fresno	2013
APW Bulk	Mercury	180-46604-1	0.00078	0.00078	mg/L	J	0.002	Los Angeles	2015
Aqueous IC	Mercury	180-1133-1	0.002	0.001	mg/L	U	0.002	Sacramento	2011
APW	Mercury	180-1933-1	0.002	0.001	mg/L	U	0.002	Los Angeles	2011
APW	Mercury	180-1862-1	0.002	0.001	mg/L	U	0.002	Santa Ana	2011
Aqueous IC	Mercury	180-1863-1	0.002	0.001	mg/L	U	0.002	Santa Ana	2011
Aqueous IC	Mercury	180-1930-1	0.002	0.001	mg/L	U	0.002	Los Angeles	2011
APW	Mercury	180-1957-1	0.002	0.001	mg/L	U	0.002	Fresno	2011
APW	Mercury	180-1961-1	0.002	0.001	mg/L	U	0.002	Highland	2011
Aqueous IC	Mercury	180-1963-2	0.002	0.001	mg/L	U	0.002	Highland	2011
APW	Mercury	180-12869-1	0.002	0.001	mg/L	U	0.002	Los Angeles	2012
APW	Mercury	180-13030-1	0.002	0.001	mg/L	U	0.002	Highland	2012
APW	Mercury	180-13997-1	0.002	0.001	mg/L	U	0.002	Highland	2012
APW	Mercury	180-12870-1	0.002	0.001	mg/L	U	0.002	Fresno	2012
APW	Mercury	180-11964-1	0.002	0.001	mg/L	U	0.002	Sacramento	2012
Aqueous IC	Mercury	180-11264-1	0.002	0.001	mg/L	U	0.002	Santa Ana	2012
Aqueous IC	Mercury	180-11971-1	0.002	0.001	mg/L	U	0.002	Sacramento	2012
APW	Mercury	180-23543-1	0.002	0.001	mg/L	U	0.002	Highland	2013
APW	Mercury	180-23540-1	0.002	0.001	mg/L	U	0.002	Los Angeles	2013
Aqueous IC	Mercury	180-23567-2	0.002	0.001	mg/L	U	0.002	Los Angeles	2013
APW	Mercury	180-25501-1	0.002	0.001	mg/L	U	0.002	Sacramento	2013
Aqueous IC	Mercury	180-25755-1	0.002	0.001	mg/L	U	0.002	Santa Ana	2013
APW Bulk Tank	Mercury	180-35276-1	0.002	0.001	mg/L	U	0.002	Highland	2014
APW Bulk Tank	Mercury	180-35141-1	0.002	0.001	mg/L	U	0.002	Los Angeles	2014
Aqueous IC	Mercury	180-35277-1	0.002	0.001	mg/L	U	0.002	Los Angeles	2014
APW	Mercury	180-35960-2	0.002	0.001	mg/L	U	0.002	Sacramento	2014
Aqueous IC	Mercury	180-34938-1	0.002	0.001	mg/L	U	0.002	Santa Ana	2014

APW	Mercury	180-38298-1	0.002	0.001	mg/L	U	0.002			Boise	2014
APW	Mercury	180-39595-1	0.002	0.001	mg/L	U	0.002			Fresno	2014
APW	Mercury	180-42909-1	0.002	0.001	mg/L	U	0.002			Boise	2015
APW	Mercury	180-49157-1	0.002	0.001	mg/L	U	0.002			Sacramento	2015
Aqueous IC	Mercury	180-42424-1	0.002	0.001	mg/L	U	0.002			Chandler	2015
Aqueous IC	Mercury	180-46921-1	0.002	0.001	mg/L	U	0.002			Los Angeles	2015
APW	Mercury	180-52260-1	0.002	0.001	mg/L	U	0.002			Santa Ana	2015
Aqueous IC	Mercury	180-52258-2	0.002	0.001	mg/L	U	0.002			Santa Ana	2015
APW	Mercury	180-52525-1	0.002	0.001	mg/L	U	0.002	47	78	Boise	2016
APW	Mercury	180-58632-1	0.002	0.001	mg/L	U	0.002			Sacramento	2016
APW	Mercury	180-58151-1	0.002	0.001	mg/L	U	0.002			Santa Ana	2016
Aqueous IC	Mercury	180-57955-1	0.002	0.001	mg/L	U	0.002			Los Angeles	2016
Aqueous IC	Mercury	180-58633-1	0.002	0.001	mg/L	U	0.002			Sacramento	2016
APW	Mercury	180-66778-1	0.002	0.001	mg/L	U	0.002			Boise	2017
APW	Mercury	180-64610-1	0.002	0.001	mg/L	U	0.002			Chandler	2017
APW	Mercury	180-68411-1	0.002	0.001	mg/L	U	0.002			Los Angeles	2017
APW	Mercury	180-67799-1	0.002	0.001	mg/L	U	0.002			Santa Ana	2017
APW	Mercury	180-64793-1	0.002	0.001	mg/L	U	0.002			Wichita	2017
APW	Mercury	180-70452-1	0.002	0.001	mg/L	U	0.002			Sacramento	2017
APW Bulk Tank	Mercury	180-68412-1	0.002	0.001	mg/L	U	0.002			Los Angeles	2017
APW Bulk Tank	Mercury	180-70449-1	0.002	0.001	mg/L	U	0.002			Sacramento	2017
Aqueous IC	Mercury	180-67798-1	0.002	0.001	mg/L	U	0.002			Santa Ana	2017
APW	Mercury	180-77402-1	0.002	0.001	mg/L	U	0.002			Boise	2018
APW	Mercury	180-76916-1	0.002	0.001	mg/L	U	0.002			Chandler	2018
APW	Mercury	180-82402-1	0.002	0.001	mg/L	U	0.002			Clackamas	2018
APW	Mercury	180-79848-1	0.002	0.001	mg/L	U	0.002			Los Angeles	2018
APW	Mercury	180-80854-1	0.002	0.001	mg/L	U	0.002			Sacramento	2018
APW	Mercury	180-81361-1	0.002	0.001	mg/L	U	0.002			Salisbury	2018
APW	Mercury	180-76918-1	0.002	0.001	mg/L	U	0.002			Salt Lake City	2018
APW	Mercury	180-78618-1	0.002	0.001	mg/L	U	0.002			Santa Ana	2018
APW	Mercury	180-76205-1	0.002	0.001	mg/L	U	0.002			Wichita	2018
APW Bulk Tank	Mercury	180-79850-2	0.002	0.001	mg/L	U	0.002			Los Angeles	2018
APW Bulk Tank	Mercury	180-78615-1	0.002	0.001	mg/L	U	0.002			Santa Ana	2018
Aqueous IC	Mercury	180-80856-1	0.002	0.001	mg/L	U	0.002			Sacramento	2018

Aqueous IC	Mercury	180-82080-2	0.002	0.001	mg/L	U	0.002	Santa Ana	2018
APW Bulk	Mercury	180-1968-1	0.0078	0.0078	mg/L		0.002	El Monte	2011
APW	Mercury	180-1123-1	0.02	0.01	mg/L	U	0.02	Sacramento	2011
Aqueous IC	Mercury	180-23587-1	0.033	0.0165	mg/Kg	U	0.033	Highland	2013
APW Bulk Tank	Mercury	180-25297-1	0.033	0.0165	mg/L	U	0.033	El Monte	2013
APW Bulk Tank	Mercury	180-34895-1	0.033	0.0165	mg/L	U	0.033	Santa Ana	2014
APW Bulk Tank	Methylphenol, 3 & 4	180-35141-1	0.05	0.025	mg/L	U	0.05	Los Angeles	2014
APW	Methylphenol, 3 & 4	180-35960-2	0.05	0.025	mg/L	U	0.05	Sacramento	2014
APW	Methylphenol, 3 & 4	180-39595-1	0.05	0.025	mg/L	U	0.05	Fresno	2014
APW	Methylphenol, 3 & 4	180-49157-1	0.05	0.025	mg/L	U	0.05	Sacramento	2015
APW Bulk	Methylphenol, 3 & 4	180-47817-1	0.05	0.025	mg/L	U	0.05	Highland	2015
APW	Methylphenol, 3 & 4	180-52260-1	0.05	0.025	mg/L	U	0.05	Santa Ana	2015
APW	Methylphenol, 3 & 4	180-52525-1	0.05	0.025	mg/L	U	0.05	Boise	2016
APW	Methylphenol, 3 & 4	180-57948-2	0.05	0.025	mg/L	U	0.05	Los Angeles	2016
APW	Methylphenol, 3 & 4	180-58632-1	0.05	0.025	mg/L	U	0.05	Sacramento	2016
Aqueous IC	Methylphenol, 3 & 4	180-57955-1	0.05	0.025	mg/L	U *	0.05	Los Angeles	2016
Aqueous IC	Methylphenol, 3 & 4	180-58633-1	0.05	0.025	mg/L	U	0.05	Sacramento	2016
APW Bulk Tank	Methylphenol, 3 & 4	180-58654-1	0.05	0.025	mg/L	U	0.05	Highland	2016
APW Bulk Tank	Methylphenol, 3 & 4	180-58626-1	0.05	0.025	mg/L	U	0.05	Sacramento	2016
APW Bulk Tank	Methylphenol, 3 & 4	180-58156-1	0.05	0.025	mg/L	U	0.05	Santa Ana	2016
APW	Methylphenol, 3 & 4	180-66778-1	0.05	0.025	mg/L	U	0.05	Boise	2017
APW	Methylphenol, 3 & 4	180-64610-1	0.05	0.025	mg/L	U	0.05	Chandler	2017
APW	Methylphenol, 3 & 4	180-68411-1	0.05	0.025	mg/L	U	0.05	Los Angeles	2017
APW	Methylphenol, 3 & 4	180-70635-1	0.05	0.025	mg/L	U	0.05	Salisbury	2017
APW	Methylphenol, 3 & 4	180-67799-1	0.05	0.025	mg/L	U	0.05	Santa Ana	2017
APW	Methylphenol, 3 & 4	180-64793-1	0.05	0.025	mg/L	U	0.05	Wichita	2017
APW	Methylphenol, 3 & 4	180-70452-1	0.05	0.025	mg/L	U	0.05	Sacramento	2017
APW Bulk Tank	Methylphenol, 3 & 4	180-68412-1	0.05	0.025	mg/L	U	0.05	Los Angeles	2017
APW Bulk Tank	Methylphenol, 3 & 4	180-70449-1	0.05	0.025	mg/L	U	0.05	Sacramento	2017
Aqueous IC	Methylphenol, 3 & 4	180-67798-1	0.05	0.025	mg/L	U	0.05	Santa Ana	2017
APW	Methylphenol, 3 & 4	180-77402-1	0.05	0.025	mg/L	U	0.05	Boise	2018
APW	Methylphenol, 3 & 4	180-76916-1	0.025	0.025	mg/L	J	0.05	Chandler	2018
APW	Methylphenol, 3 & 4	180-82402-1	0.05	0.025	mg/L	U	0.05	Clackamas	2018
APW	Methylphenol, 3 & 4	180-79848-1	0.05	0.025	mg/L	U	0.05	Los Angeles	2018

APW	Methylphenol, 3 & 4	180-79774-1	0.05	0.025	mg/L	U	0.05			Oklahoma City	2018
APW	Methylphenol, 3 & 4	180-80854-1	0.05	0.025	mg/L	U	0.05			Sacramento	2018
APW	Methylphenol, 3 & 4	180-81361-1	0.05	0.025	mg/L	U	0.05			Salisbury	2018
APW	Methylphenol, 3 & 4	180-78618-1	0.05	0.025	mg/L	U	0.05			Santa Ana	2018
APW	Methylphenol, 3 & 4	180-76205-1	0.05	0.025	mg/L	U	0.05	33	53	Wichita	2018
APW Bulk Tank	Methylphenol, 3 & 4	180-79850-2	0.05	0.025	mg/L	U	0.05			Los Angeles	2018
APW Bulk Tank	Methylphenol, 3 & 4	180-78615-1	0.05	0.025	mg/L	U	0.05			Santa Ana	2018
APW Bulk Tank	Methylphenol, 3 & 4	180-71593-1	0.05	0.025	mg/L	U	0.05			Santa Ana	2018
Aqueous IC	Methylphenol, 3 & 4	180-80856-1	0.05	0.025	mg/L	U	0.05			Sacramento	2018
Aqueous IC	Methylphenol, 3 & 4	180-82080-2	0.05	0.025	mg/L	U	0.05			Santa Ana	2018
APW Bulk Tank	Methylphenol, 3 & 4	180-49517-1	0.044	0.044	mg/L	J	0.05			Fresno	2015
APW Bulk Tank	Methylphenol, 3 & 4	180-57950-2	0.058	0.058	mg/L		0.05			Los Angeles	2016
APW	Methylphenol, 3 & 4	180-76918-1	0.2	0.1	mg/L	U	0.2			Salt Lake City	2018
Aqueous IC	Methylphenol, 3 & 4	180-35277-1	0.25	0.125	mg/L	U	0.25			Los Angeles	2014
APW	Methylphenol, 3 & 4	180-42909-1	0.25	0.125	mg/L	U	0.25			Boise	2015
APW	Methylphenol, 3 & 4	180-38298-1	0.16	0.16	mg/L		0.05			Boise	2014
Aqueous IC	Methylphenol, 3 & 4	180-42424-1	0.33	0.165	mg/L	U	0.33			Chandler	2015
Aqueous IC	Methylphenol, 3 & 4	180-46921-1	0.5	0.25	mg/L	U	0.5			Los Angeles	2015
APW Bulk Tank	Methylphenol, 3 & 4	180-58407-1	0.32	0.32	mg/L		0.05			Fresno	2016
APW Bulk Tank	Methylphenol, 3 & 4	180-34895-1	1	0.5	mg/L	U	1			Santa Ana	2014
APW	Methylphenol, 3 & 4	180-58151-1	1.3	0.65	mg/L	U	1.3			Santa Ana	2016
APW Bulk Tank	Methylphenol, 3 & 4	180-35276-1	0.95	0.95	mg/L		0.5			Highland	2014
Aqueous IC	Methylphenol, 3 & 4	180-34938-2	2	1	mg/L	U	2			Santa Ana	2014
Aqueous IC	Methylphenol, 3 & 4	180-52258-1	2	1	mg/L	U	2			Santa Ana	2015
Aqueous IC	Methylphenol, 3 & 4	180-1863-1	100	50	mg/L	U	100000			Santa Ana	2011
APW Bulk Tank	Nitrobenzene	180-35141-1	0.05	0.025	mg/L	U	0.05			Los Angeles	2014
APW	Nitrobenzene	180-35960-2	0.05	0.025	mg/L	U	0.05			Sacramento	2014
APW	Nitrobenzene	180-38298-1	0.05	0.025	mg/L	U *	0.05			Boise	2014
APW	Nitrobenzene	180-39595-1	0.05	0.025	mg/L	U	0.05			Fresno	2014
APW	Nitrobenzene	180-49157-1	0.05	0.025	mg/L	U	0.05			Sacramento	2015
APW Bulk	Nitrobenzene	180-47817-1	0.05	0.025	mg/L	U	0.05			Highland	2015
APW	Nitrobenzene	180-52260-1	0.05	0.025	mg/L	U	0.05			Santa Ana	2015
APW Bulk Tank	Nitrobenzene	180-49517-1	0.05	0.025	mg/L	U	0.05			Fresno	2015
APW	Nitrobenzene	180-52525-1	0.05	0.025	mg/L	U	0.05			Boise	2016

APW	Nitrobenzene	180-57948-2	0.05	0.025	mg/L	U	0.05			Los Angeles	2016
APW	Nitrobenzene	180-58632-1	0.05	0.025	mg/L	U	0.05			Sacramento	2016
Aqueous IC	Nitrobenzene	180-57955-1	0.05	0.025	mg/L	U *	0.05			Los Angeles	2016
Aqueous IC	Nitrobenzene	180-58633-1	0.05	0.025	mg/L	U	0.05			Sacramento	2016
APW Bulk Tank	Nitrobenzene	180-58407-1	0.05	0.025	mg/L	U	0.05			Fresno	2016
APW Bulk Tank	Nitrobenzene	180-58654-1	0.05	0.025	mg/L	U	0.05			Highland	2016
APW Bulk Tank	Nitrobenzene	180-57950-2	0.05	0.025	mg/L	U	0.05			Los Angeles	2016
APW Bulk Tank	Nitrobenzene	180-58626-1	0.05	0.025	mg/L	U	0.05			Sacramento	2016
APW Bulk Tank	Nitrobenzene	180-58156-1	0.05	0.025	mg/L	U	0.05			Santa Ana	2016
APW	Nitrobenzene	180-66778-1	0.05	0.025	mg/L	U	0.05			Boise	2017
APW	Nitrobenzene	180-64610-1	0.05	0.025	mg/L	U	0.05			Chandler	2017
APW	Nitrobenzene	180-68411-1	0.05	0.025	mg/L	U *	0.05			Los Angeles	2017
APW	Nitrobenzene	180-70635-1	0.05	0.025	mg/L	U	0.05			Salisbury	2017
APW	Nitrobenzene	180-67799-1	0.05	0.025	mg/L	U	0.05			Santa Ana	2017
APW	Nitrobenzene	180-64793-1	0.05	0.025	mg/L	U *	0.05			Wichita	2017
APW	Nitrobenzene	180-70452-1	0.05	0.025	mg/L	U	0.05			Sacramento	2017
APW Bulk Tank	Nitrobenzene	180-68412-1	0.05	0.025	mg/L	U *	0.05			Los Angeles	2017
APW Bulk Tank	Nitrobenzene	180-70449-1	0.05	0.025	mg/L	U	0.05			Sacramento	2017
Aqueous IC	Nitrobenzene	180-67798-1	0.05	0.025	mg/L	U	0.05			Santa Ana	2017
APW	Nitrobenzene	180-77402-1	0.05	0.025	mg/L	U	0.05			Boise	2018
APW	Nitrobenzene	180-76916-1	0.05	0.025	mg/L	U	0.05			Chandler	2018
APW	Nitrobenzene	180-82402-1	0.05	0.025	mg/L	U	0.05			Clackamas	2018
APW	Nitrobenzene	180-79848-1	0.05	0.025	mg/L	U	0.05			Los Angeles	2018
APW	Nitrobenzene	180-79774-1	0.05	0.025	mg/L	U *	0.05	33	53	Oklahoma City	2018
APW	Nitrobenzene	180-80854-1	0.05	0.025	mg/L	U	0.05			Sacramento	2018
APW	Nitrobenzene	180-81361-1	0.05	0.025	mg/L	U	0.05			Salisbury	2018
APW	Nitrobenzene	180-78618-1	0.05	0.025	mg/L	U	0.05			Santa Ana	2018
APW	Nitrobenzene	180-76205-1	0.05	0.025	mg/L	U	0.05			Wichita	2018
APW Bulk Tank	Nitrobenzene	180-79850-2	0.05	0.025	mg/L	U	0.05			Los Angeles	2018
APW Bulk Tank	Nitrobenzene	180-78615-1	0.05	0.025	mg/L	U	0.05			Santa Ana	2018
APW Bulk Tank	Nitrobenzene	180-71593-1	0.05	0.025	mg/L	U	0.05			Santa Ana	2018
Aqueous IC	Nitrobenzene	180-80856-1	0.05	0.025	mg/L	U	0.05			Sacramento	2018
Aqueous IC	Nitrobenzene	180-82080-2	0.05	0.025	mg/L	U	0.05			Santa Ana	2018
APW	Nitrobenzene	180-76918-1	0.2	0.1	mg/L	U	0.2			Salt Lake City	2018

Aqueous IC	Nitrobenzene	180-35277-1	0.25	0.125	mg/L	U	0.25	Los Angeles	2014
APW	Nitrobenzene	180-42909-1	0.25	0.125	mg/L	U *	0.25	Boise	2015
Aqueous IC	Nitrobenzene	180-42424-1	0.33	0.165	mg/L	U	0.33	Chandler	2015
APW Bulk Tank	Nitrobenzene	180-35276-1	0.5	0.25	mg/L	U	0.5	Highland	2014
Aqueous IC	Nitrobenzene	180-46921-1	0.5	0.25	mg/L	U	0.5	Los Angeles	2015
APW Bulk Tank	Nitrobenzene	180-34895-1	1	0.5	mg/L	U	1	Santa Ana	2014
APW	Nitrobenzene	180-58151-1	1.3	0.65	mg/L	U	1.3	Santa Ana	2016
Aqueous IC	Nitrobenzene	180-34938-2	2	1	mg/L	U	2	Santa Ana	2014
Aqueous IC	Nitrobenzene	180-52258-1	2	1	mg/L	U	2	Santa Ana	2015
Aqueous IC	Nitrobenzene	180-1863-1	200	100	mg/L	U	200	Santa Ana	2011
APW Bulk Tank	Pentachlorophenol	180-34895-1	0.13	0.065	mg/L	U	0.13	Santa Ana	2014
APW Bulk Tank	Pentachlorophenol	180-35141-1	0.25	0.125	mg/L	U	0.25	Los Angeles	2014
APW	Pentachlorophenol	180-35960-2	0.25	0.125	mg/L	U	0.25	Sacramento	2014
APW	Pentachlorophenol	180-38298-1	0.25	0.125	mg/L	U	0.25	Boise	2014
APW	Pentachlorophenol	180-39595-1	0.25	0.125	mg/L	U	0.25	Fresno	2014
APW	Pentachlorophenol	180-49157-1	0.25	0.125	mg/L	U	0.25	Sacramento	2015
APW Bulk	Pentachlorophenol	180-47817-1	0.25	0.125	mg/L	U	0.25	Highland	2015
APW	Pentachlorophenol	180-52260-1	0.25	0.125	mg/L	U	0.25	Santa Ana	2015
APW Bulk Tank	Pentachlorophenol	180-49517-1	0.25	0.125	mg/L	U	0.25	Fresno	2015
APW	Pentachlorophenol	180-52525-1	0.25	0.125	mg/L	U	0.25	Boise	2016
APW	Pentachlorophenol	180-57948-2	0.25	0.125	mg/L	U	0.25	Los Angeles	2016
APW	Pentachlorophenol	180-58632-1	0.25	0.125	mg/L	U	0.25	Sacramento	2016
Aqueous IC	Pentachlorophenol	180-57955-1	0.25	0.125	mg/L	U	0.25	Los Angeles	2016
Aqueous IC	Pentachlorophenol	180-58633-1	0.25	0.125	mg/L	U	0.25	Sacramento	2016
APW Bulk Tank	Pentachlorophenol	180-58407-1	0.25	0.125	mg/L	U	0.25	Fresno	2016
APW Bulk Tank	Pentachlorophenol	180-58654-1	0.25	0.125	mg/L	U	0.25	Highland	2016
APW Bulk Tank	Pentachlorophenol	180-57950-2	0.25	0.125	mg/L	U	0.25	Los Angeles	2016
APW Bulk Tank	Pentachlorophenol	180-58626-1	0.25	0.125	mg/L	U	0.25	Sacramento	2016
APW Bulk Tank	Pentachlorophenol	180-58156-1	0.25	0.125	mg/L	U	0.25	Santa Ana	2016
APW	Pentachlorophenol	180-66778-1	0.25	0.125	mg/L	U	0.25	Boise	2017
APW	Pentachlorophenol	180-64610-1	0.25	0.125	mg/L	U	0.25	Chandler	2017
APW	Pentachlorophenol	180-68411-1	0.25	0.125	mg/L	U *	0.25	Los Angeles	2017
APW	Pentachlorophenol	180-70635-1	0.25	0.125	mg/L	U	0.25	Salisbury	2017
APW	Pentachlorophenol	180-67799-1	0.25	0.125	mg/L	U	0.25	Santa Ana	2017

APW	Pentachlorophenol	180-64793-1	0.25	0.125	mg/L	U *	0.25			Wichita	2017
APW	Pentachlorophenol	180-70452-1	0.25	0.125	mg/L	U	0.25			Sacramento	2017
APW Bulk Tank	Pentachlorophenol	180-68412-1	0.25	0.125	mg/L	U *	0.25			Los Angeles	2017
APW Bulk Tank	Pentachlorophenol	180-70449-1	0.25	0.125	mg/L	U	0.25			Sacramento	2017
Aqueous IC	Pentachlorophenol	180-67798-1	0.25	0.125	mg/L	U	0.25			Santa Ana	2017
APW	Pentachlorophenol	180-77402-1	0.25	0.125	mg/L	U	0.25			Boise	2018
APW	Pentachlorophenol	180-76916-1	0.25	0.125	mg/L	U	0.25			Chandler	2018
APW	Pentachlorophenol	180-82402-1	0.25	0.125	mg/L	U	0.25			Clackamas	2018
APW	Pentachlorophenol	180-79848-1	0.25	0.125	mg/L	U	0.25	33	53	Los Angeles	2018
APW	Pentachlorophenol	180-79774-1	0.25	0.125	mg/L	U	0.25			Oklahoma City	2018
APW	Pentachlorophenol	180-80854-1	0.25	0.125	mg/L	U	0.25			Sacramento	2018
APW	Pentachlorophenol	180-81361-1	0.25	0.125	mg/L	U	0.25			Salisbury	2018
APW	Pentachlorophenol	180-78618-1	0.25	0.125	mg/L	U	0.25			Santa Ana	2018
APW	Pentachlorophenol	180-76205-1	0.25	0.125	mg/L	U	0.25			Wichita	2018
APW Bulk Tank	Pentachlorophenol	180-79850-2	0.25	0.125	mg/L	U	0.25			Los Angeles	2018
APW Bulk Tank	Pentachlorophenol	180-78615-1	0.25	0.125	mg/L	U	0.25			Santa Ana	2018
APW Bulk Tank	Pentachlorophenol	180-71593-1	0.25	0.125	mg/L	U	0.25			Santa Ana	2018
Aqueous IC	Pentachlorophenol	180-80856-1	0.25	0.125	mg/L	U	0.25			Sacramento	2018
Aqueous IC	Pentachlorophenol	180-82080-2	0.25	0.125	mg/L	U	0.25			Santa Ana	2018
APW	Pentachlorophenol	180-76918-1	1	0.5	mg/L	U	1			Salt Lake City	2018
Aqueous IC	Pentachlorophenol	180-35277-1	1.3	0.65	mg/L	U	1.3			Los Angeles	2014
APW	Pentachlorophenol	180-42909-1	1.3	0.65	mg/L	U *	1.3			Boise	2015
Aqueous IC	Pentachlorophenol	180-42424-1	1.6	0.8	mg/L	U	1.6			Chandler	2015
APW Bulk Tank	Pentachlorophenol	180-35276-1	2.5	1.25	mg/L	U	2.5			Highland	2014
Aqueous IC	Pentachlorophenol	180-46921-1	2.5	1.25	mg/L	U	2.5			Los Angeles	2015
APW	Pentachlorophenol	180-58151-1	6.5	3.25	mg/L	U	6.5			Santa Ana	2016
Aqueous IC	Pentachlorophenol	180-34938-2	10	5	mg/L	U	10			Santa Ana	2014
Aqueous IC	Pentachlorophenol	180-52258-1	10	5	mg/L	U	10			Santa Ana	2015
Aqueous IC	Pentachlorophenol	180-1863-1	100	50	mg/L	U	100			Santa Ana	2011
APW	pH	180-76205-1	7.3	7.3	SU	HF	0.1			Wichita	2018
APW Bulk Tank	pH	180-49517-1	7.68	7.68	SU		0.1			Fresno	2015
APW	pH	180-49157-1	8.26	8.26	SU	HF	0.1			Sacramento	2015
APW	pH	180-76916-1	8.4	8.4	SU	HF	0.1			Chandler	2018
APW Bulk Tank	pH	180-35276-1	8.41	8.41	No Units	HF	0.1			Highland	2014

APW Bulk Tank	pH	180-34895-1	8.68	8.68	No Units		0.1	Santa Ana	2014
APW	pH	180-68411-1	8.7	8.7	SU	HF	0.1	Los Angeles	2017
Aqueous IC	pH	180-57955-1	8.8	8.8	SU	HF	0.1	Los Angeles	2016
APW	pH	180-80854-1	8.8	8.8	SU	HF	0.1	Sacramento	2018
APW	pH	180-11964-1	8.82	8.82	No Units	HF	0.1	Sacramento	2012
APW	pH	180-64793-1	8.9	8.9	SU	HF	0.1	Wichita	2017
APW	pH	180-13997-1	9	9	No Units	H	0.1	Highland	2012
APW Bulk Tank	pH	180-58654-1	9	9	SU	HF	0.1	Highland	2016
APW Bulk	pH	180-46604-1	9.09	9.09	SU	HF	0.1	Los Angeles	2015
APW Bulk Tank	pH	180-57950-2	9.3	9.3	SU	HF	0.1	Los Angeles	2016
APW Bulk Tank	pH	180-68412-1	9.3	9.3	SU	HF	0.1	Los Angeles	2017
APW	pH	180-52260-1	9.36	9.36	SU	HF	0.1	Santa Ana	2015
APW Bulk Tank	pH	180-58156-1	9.4	9.4	SU	HF	0.1	Santa Ana	2016
APW	pH	180-66778-1	9.4	9.4	SU	HF	0.1	Boise	2017
APW	pH	180-78618-1	9.4	9.4	SU	HF	0.1	Santa Ana	2018
APW Bulk Tank	pH	180-79850-2	9.4	9.4	SU	HF	0.1	Los Angeles	2018
APW Bulk Tank	pH	180-71593-1	9.4	9.4	SU	HF	0.1	Santa Ana	2018
APW	pH	180-23540-1	9.48	9.48	No Units	HF	0.1	Los Angeles	2013
APW	pH	180-38298-1	9.51	9.51	SU	HF	0.1	Boise	2014
APW	pH	180-52525-1	9.51	9.51	SU	HF	0.1	Boise	2016
APW Bulk Tank	pH	180-25297-1	9.6	9.6	No Units		0.1	El Monte	2013
APW	pH	180-79848-1	9.6	9.6	SU	HF	0.1	Los Angeles	2018
APW Bulk Tank	pH	180-78615-1	9.6	9.6	SU	HF	0.1	Santa Ana	2018
Aqueous IC	pH	180-80856-1	9.6	9.6	SU	HF	0.1	Sacramento	2018
APW Bulk Tank	pH	180-35141-1	9.63	9.63	No Units	HF	0.1	Los Angeles	2014
APW	pH	180-42909-1	9.63	9.63	SU	HF	0.1	Boise	2015
Aqueous IC	pH	180-35277-1	9.65	9.65	No Units	HF	0.1	Los Angeles	2014
APW	pH	180-23542-1	9.68	9.68	No Units	HF	0.1	Fresno	2013
APW	pH	180-13030-1	9.75	9.75	No Units	H	0.1	Highland	2012
APW	pH	180-39595-1	9.77	9.77	SU	H	0.1	Fresno	2014
APW	pH	180-58151-1	9.8	9.8	SU	HF	0.1	Santa Ana	2016
APW	pH	180-77402-1	9.8	9.8	SU	HF	0.1	Boise	2018
APW Bulk	pH	180-47817-1	9.82	9.82	SU	H	0.1	Highland	2015
APW	pH	180-82402-1	9.9	9.9	SU	HF	0.1	Clackamas	2018

APW	pH	180-76918-1	9.9	9.9	SU	HF	0.1			Salt Lake City	2018
Aqueous IC	pH	180-82080-2	9.9	9.9	SU	HF	0.1			Santa Ana	2018
Aqueous IC	pH	180-25755-1	9.96	9.96	No Units	HF	0.1			Santa Ana	2013
APW	pH	180-12869-1	9.98	9.98	No Units	HF	0.1			Los Angeles	2012
APW	pH	180-1933-1	10	10	No Units	HF	0.1			Los Angeles	2011
APW	pH	180-1957-1	10	10	No Units	HF	0.1			Fresno	2011
Aqueous IC	pH	180-1963-2	10	10	No Units	HF	0.1			Highland	2011
APW Bulk	pH	180-1968-1	10	10	No Units	HF	0.1	47	78	El Monte	2011
APW	pH	180-23543-1	10	10	No Units	HF	0.1			Highland	2013
Aqueous IC	pH	180-23587-1	10	10	No Units		0.1			Highland	2013
Aqueous IC	pH	180-34938-1	10	10	No Units	HF	0.1			Santa Ana	2014
APW Bulk Tank	pH	180-58407-1	10	10	SU	HF	0.1			Fresno	2016
APW	pH	180-81361-1	10.1	10.1	SU	HF	0.1			Salisbury	2018
APW	pH	180-12870-1	10.2	10.2	No Units	HF	0.1			Fresno	2012
Aqueous IC	pH	180-42424-1	10.2	10.2	SU	H	0.1			Chandler	2015
APW	pH	180-57948-2	10.2	10.2	SU	HF	0.1			Los Angeles	2016
APW Bulk Tank	pH	180-58626-1	10.2	10.2	SU	HF	0.1			Sacramento	2016
Aqueous IC	pH	180-11971-1	10.3	10.3	No Units	HF	0.1			Sacramento	2012
APW	pH	180-35960-2	10.3	10.3	No Units	HF	0.1			Sacramento	2014
APW	pH	180-70635-1	10.3	10.3	SU	HF	0.1			Salisbury	2017
Aqueous IC	pH	180-52258-2	10.4	10.4	SU	HF	0.1			Santa Ana	2015
APW	pH	180-70452-1	10.4	10.4	SU	HF	0.1			Sacramento	2017
Aqueous IC	pH	180-67798-1	10.4	10.4	SU	HF	0.1			Santa Ana	2017
APW	pH	180-25501-1	10.5	10.5	No Units	HF	0.1			Sacramento	2013
APW	pH	180-58632-1	10.5	10.5	SU	HF	0.1			Sacramento	2016
Aqueous IC	pH	180-46921-1	10.6	10.6	SU	HF	0.1			Los Angeles	2015
APW Bulk Tank	pH	180-70449-1	10.6	10.6	SU	HF	0.1			Sacramento	2017
APW	pH	180-79774-1	10.6	10.6	SU	HF	0.1			Oklahoma City	2018
Aqueous IC	pH	180-23567-2	10.7	10.7	No Units	HF	0.1			Los Angeles	2013
Aqueous IC	pH	180-58633-1	10.7	10.7	SU	HF	0.1			Sacramento	2016
Aqueous IC	pH	180-11264-1	10.8	10.8	No Units	HF	0.1			Santa Ana	2012
APW	pH	180-64610-1	10.8	10.8	SU	HF	0.1			Chandler	2017
APW	pH	180-1123-1	11	11	No Units	HF	0.1			Sacramento	2011
Aqueous IC	pH	180-1133-1	11	11	No Units	HF	0.1			Sacramento	2011

APW	pH	180-1862-1	11	11	No Units	HF	0.1	Santa Ana	2011
Aqueous IC	pH	180-1863-1	11	11	No Units	HF	0.1	Santa Ana	2011
Aqueous IC	pH	180-1930-1	11	11	No Units	HF	0.1	Los Angeles	2011
APW	pH	180-1961-1	11	11	No Units	HF	0.1	Highland	2011
APW	pH	180-67799-1	11.2	11.2	SU	HF	0.1	Santa Ana	2017
APW Bulk Tank	Pyridine	180-35141-1	0.1	0.05	mg/L	U	0.1	Los Angeles	2014
APW	Pyridine	180-35960-2	0.1	0.05	mg/L	U	0.1	Sacramento	2014
APW	Pyridine	180-38298-1	0.1	0.05	mg/L	U	0.1	Boise	2014
APW	Pyridine	180-39595-1	0.1	0.05	mg/L	U	0.1	Fresno	2014
APW	Pyridine	180-49157-1	0.1	0.05	mg/L	U	0.1	Sacramento	2015
APW Bulk	Pyridine	180-47817-1	0.1	0.05	mg/L	U	0.1	Highland	2015
APW	Pyridine	180-52260-1	0.1	0.05	mg/L	U *	0.1	Santa Ana	2015
APW Bulk Tank	Pyridine	180-49517-1	0.1	0.05	mg/L	U	0.1	Fresno	2015
APW	Pyridine	180-52525-1	0.1	0.05	mg/L	U	0.1	Boise	2016
APW	Pyridine	180-57948-2	0.1	0.05	mg/L	U	0.1	Los Angeles	2016
APW	Pyridine	180-58632-1	0.1	0.05	mg/L	U	0.1	Sacramento	2016
Aqueous IC	Pyridine	180-57955-1	0.1	0.05	mg/L	U *	0.1	Los Angeles	2016
Aqueous IC	Pyridine	180-58633-1	0.1	0.05	mg/L	U	0.1	Sacramento	2016
APW Bulk Tank	Pyridine	180-58407-1	0.1	0.05	mg/L	U	0.1	Fresno	2016
APW Bulk Tank	Pyridine	180-58654-1	0.1	0.05	mg/L	U	0.1	Highland	2016
APW Bulk Tank	Pyridine	180-57950-2	0.1	0.05	mg/L	U	0.1	Los Angeles	2016
APW Bulk Tank	Pyridine	180-58626-1	0.1	0.05	mg/L	U	0.1	Sacramento	2016
APW Bulk Tank	Pyridine	180-58156-1	0.1	0.05	mg/L	U	0.1	Santa Ana	2016
APW	Pyridine	180-66778-1	0.1	0.05	mg/L	U	0.1	Boise	2017
APW	Pyridine	180-64610-1	0.1	0.05	mg/L	U	0.1	Chandler	2017
APW	Pyridine	180-68411-1	0.1	0.05	mg/L	U	0.1	Los Angeles	2017
APW	Pyridine	180-70635-1	0.1	0.05	mg/L	U	0.1	Salisbury	2017
APW	Pyridine	180-67799-1	0.1	0.05	mg/L	U	0.1	Santa Ana	2017
APW	Pyridine	180-64793-1	0.1	0.05	mg/L	U	0.1	Wichita	2017
APW	Pyridine	180-70452-1	0.1	0.05	mg/L	U	0.1	Sacramento	2017
APW Bulk Tank	Pyridine	180-68412-1	0.1	0.05	mg/L	U	0.1	Los Angeles	2017
APW Bulk Tank	Pyridine	180-70449-1	0.1	0.05	mg/L	U	0.1	Sacramento	2017
Aqueous IC	Pyridine	180-67798-1	0.1	0.05	mg/L	U	0.1	Santa Ana	2017
APW	Pyridine	180-77402-1	0.1	0.05	mg/L	U	0.1	Boise	2018

APW	Pyridine	180-76916-1	0.1	0.05	mg/L	U	0.1			Chandler	2018
APW	Pyridine	180-82402-1	0.1	0.05	mg/L	U	0.1			Clackamas	2018
APW	Pyridine	180-79848-1	0.1	0.05	mg/L	U	0.1			Los Angeles	2018
APW	Pyridine	180-79774-1	0.1	0.05	mg/L	U	0.1	33	53	Oklahoma City	2018
APW	Pyridine	180-80854-1	0.1	0.05	mg/L	U	0.1			Sacramento	2018
APW	Pyridine	180-81361-1	0.1	0.05	mg/L	U	0.1			Salisbury	2018
APW	Pyridine	180-78618-1	0.1	0.05	mg/L	U	0.1			Santa Ana	2018
APW	Pyridine	180-76205-1	0.1	0.05	mg/L	U	0.1			Wichita	2018
APW Bulk Tank	Pyridine	180-79850-2	0.1	0.05	mg/L	U	0.1			Los Angeles	2018
APW Bulk Tank	Pyridine	180-78615-1	0.1	0.05	mg/L	U	0.1			Santa Ana	2018
APW Bulk Tank	Pyridine	180-71593-1	0.1	0.05	mg/L	U	0.1			Santa Ana	2018
Aqueous IC	Pyridine	180-80856-1	0.1	0.05	mg/L	U	0.1			Sacramento	2018
Aqueous IC	Pyridine	180-82080-2	0.1	0.05	mg/L	U *	0.1			Santa Ana	2018
APW	Pyridine	180-76918-1	0.4	0.2	mg/L	U	0.4			Salt Lake City	2018
Aqueous IC	Pyridine	180-35277-1	0.5	0.25	mg/L	U	0.5			Los Angeles	2014
APW	Pyridine	180-42909-1	0.5	0.25	mg/L	U	0.5			Boise	2015
Aqueous IC	Pyridine	180-42424-1	0.65	0.325	mg/L	U	0.65			Chandler	2015
APW Bulk Tank	Pyridine	180-35276-1	1	0.5	mg/L	U	1			Highland	2014
Aqueous IC	Pyridine	180-46921-1	1	0.5	mg/L	U *	1			Los Angeles	2015
APW	Pyridine	180-58151-1	2.6	1.3	mg/L	U	2.6			Santa Ana	2016
APW Bulk Tank	Pyridine	180-34895-1	5	2.5	mg/L	U	5			Santa Ana	2014
Aqueous IC	Pyridine	180-34938-2	10	5	mg/L	U	10			Santa Ana	2014
Aqueous IC	Pyridine	180-52258-1	10	5	mg/L	U *	10			Santa Ana	2015
Aqueous IC	Pyridine	180-1863-1	100	50	mg/L	U	100			Santa Ana	2011
APW	Selenium	180-12869-1	0.05	0.025	mg/L	U	0.05			Los Angeles	2012
APW	Selenium	180-13030-1	0.05	0.025	mg/L	U	0.05			Highland	2012
APW	Selenium	180-23543-1	0.05	0.025	mg/L	U	0.05			Highland	2013
APW	Selenium	180-42909-1	0.03	0.03	mg/L	J	0.1			Boise	2015
APW	Selenium	180-12870-1	0.032	0.032	mg/L	J	0.05			Fresno	2012
APW Bulk	Selenium	180-47817-1	0.034	0.034	mg/L	J B	0.5			Highland	2015
Aqueous IC	Selenium	180-1133-1	0.038	0.038	mg/L	J	0.05			Sacramento	2011
APW	Selenium	180-23542-1	0.038	0.038	mg/L	J	0.05			Fresno	2013
APW	Selenium	180-1123-1	0.039	0.039	mg/L	J	0.05			Sacramento	2011
Aqueous IC	Selenium	180-23567-2	0.041	0.041	mg/L	J	0.05			Los Angeles	2013

APW Bulk Tank	Selenium	180-35276-1	0.042	0.042	mg/L	J	0.1	Highland	2014
APW	Selenium	180-13997-1	0.044	0.044	mg/L	J	0.05	Highland	2012
APW	Selenium	180-67799-1	0.044	0.044	mg/L	J	0.1	Santa Ana	2017
Aqueous IC	Selenium	180-80856-1	0.046	0.046	mg/L	J	0.1	Sacramento	2018
APW Bulk Tank	Selenium	180-49517-1	0.047	0.047	mg/L	J	0.5	Fresno	2015
Aqueous IC	Selenium	180-67798-1	0.047	0.047	mg/L	J	0.1	Santa Ana	2017
Aqueous IC	Selenium	180-11264-1	0.049	0.049	mg/L	J	0.05	Santa Ana	2012
APW	Selenium	180-23540-1	0.049	0.049	mg/L	J	0.05	Los Angeles	2013
APW Bulk Tank	Selenium	180-35141-1	0.049	0.049	mg/L	J	0.2	Los Angeles	2014
APW	Selenium	180-52260-1	0.049	0.049	mg/L	J	0.1	Santa Ana	2015
APW	Selenium	180-70635-1	0.049	0.049	mg/L	J	0.1	Salisbury	2017
APW	Selenium	180-11964-1	0.05	0.05	mg/L		0.05	Sacramento	2012
Aqueous IC	Selenium	180-57955-1	0.1	0.05	mg/L	U	0.1	Los Angeles	2016
APW	Selenium	180-64610-1	0.1	0.05	mg/L	U	0.1	Chandler	2017
APW	Selenium	180-68411-1	0.1	0.05	mg/L	U	0.1	Los Angeles	2017
APW Bulk Tank	Selenium	180-68412-1	0.1	0.05	mg/L	U	0.1	Los Angeles	2017
APW	Selenium	180-78618-1	0.1	0.05	mg/L	U	0.1	Santa Ana	2018
APW	Selenium	180-76205-1	0.1	0.05	mg/L	U	0.1	Wichita	2018
APW Bulk Tank	Selenium	180-78615-1	0.1	0.05	mg/L	U	0.1	Santa Ana	2018
Aqueous IC	Selenium	180-82080-2	0.051	0.051	mg/L	J	0.1	Santa Ana	2018
APW	Selenium	180-80854-1	0.052	0.052	mg/L	J	0.1	Sacramento	2018
APW	Selenium	180-25501-1	0.054	0.054	mg/L		0.05	Sacramento	2013
APW	Selenium	180-64793-1	0.054	0.054	mg/L	J	0.1	Wichita	2017
APW	Selenium	180-70452-1	0.054	0.054	mg/L	J	0.1	Sacramento	2017
Aqueous IC	Selenium	180-11971-1	0.055	0.055	mg/L		0.05	Sacramento	2012
APW	Selenium	180-1957-1	0.057	0.057	mg/L		0.05	Fresno	2011
Aqueous IC	Selenium	180-1863-1	0.059	0.059	mg/L		0.05	Santa Ana	2011
APW	Selenium	180-1862-1	0.062	0.062	mg/L		0.05	Santa Ana	2011
APW	Selenium	180-76916-1	0.062	0.062	mg/L	J	0.1	Chandler	2018
Aqueous IC	Selenium	180-1963-2	0.064	0.064	mg/L		0.05	Highland	2011
Aqueous IC	Selenium	180-35277-1	0.074	0.074	mg/L	J	0.1	Los Angeles	2014
APW	Selenium	180-1933-1	0.075	0.075	mg/L		0.05	Los Angeles	2011
APW	Selenium	180-1961-1	0.077	0.077	mg/L		0.05	Highland	2011
APW	Selenium	180-79848-1	0.086	0.086	mg/L	J	0.1	Los Angeles	2018

APW Bulk Tank	Selenium	180-58156-1	0.09	0.09	mg/L	J	0.1			Santa Ana	2016
APW	Selenium	180-58151-1	0.091	0.091	mg/L	J	0.1			Santa Ana	2016
Aqueous IC	Selenium	180-1930-1	0.092	0.092	mg/L		0.05	47	78	Los Angeles	2011
Aqueous IC	Selenium	180-42424-1	0.092	0.092	mg/L	J	0.1			Chandler	2015
Aqueous IC	Selenium	180-52258-2	0.099	0.099	mg/L	J	0.2			Santa Ana	2015
APW Bulk Tank	Selenium	180-70449-1	0.1	0.1	mg/L		0.1			Sacramento	2017
APW	Selenium	180-35960-2	0.2	0.1	mg/L	U	0.2			Sacramento	2014
APW Bulk	Selenium	180-46604-1	0.2	0.1	mg/L	U	0.2			Los Angeles	2015
APW	Selenium	180-39595-1	0.11	0.11	mg/L		0.1			Fresno	2014
Aqueous IC	Selenium	180-46921-1	0.11	0.11	mg/L	J B	0.5			Los Angeles	2015
APW	Selenium	180-52525-1	0.11	0.11	mg/L	B	0.1			Boise	2016
APW	Selenium	180-82402-1	0.11	0.11	mg/L		0.1			Clackamas	2018
APW	Selenium	180-79774-1	0.11	0.11	mg/L		0.1			Oklahoma City	2018
APW	Selenium	180-81361-1	0.11	0.11	mg/L		0.1			Salisbury	2018
Aqueous IC	Selenium	180-25755-1	0.12	0.12	mg/L		0.1			Santa Ana	2013
APW	Selenium	180-77402-1	0.12	0.12	mg/L		0.1			Boise	2018
APW Bulk Tank	Selenium	180-79850-2	0.14	0.14	mg/L		0.1			Los Angeles	2018
APW	Selenium	180-66778-1	0.23	0.23	mg/L	J	0.5			Boise	2017
APW	Selenium	180-49157-1	0.24	0.24	mg/L		0.1			Sacramento	2015
Aqueous IC	Selenium	180-23587-1	0.49	0.245	mg/L	U	0.49			Highland	2013
Aqueous IC	Selenium	180-34938-1	0.25	0.25	mg/L	J B	1			Santa Ana	2014
APW Bulk Tank	Selenium	180-25297-1	0.5	0.25	mg/L	U	0.5			El Monte	2013
APW	Selenium	180-57948-2	0.5	0.25	mg/L	U	0.5			Los Angeles	2016
APW	Selenium	180-58632-1	0.5	0.25	mg/L	U	0.5			Sacramento	2016
Aqueous IC	Selenium	180-58633-1	0.5	0.25	mg/L	U	0.5			Sacramento	2016
APW Bulk Tank	Selenium	180-58407-1	0.5	0.25	mg/L	U	0.5			Fresno	2016
APW Bulk Tank	Selenium	180-58654-1	0.5	0.25	mg/L	U	0.5			Highland	2016
APW Bulk Tank	Selenium	180-57950-2	0.5	0.25	mg/L	U	0.5			Los Angeles	2016
APW Bulk Tank	Selenium	180-58626-1	0.5	0.25	mg/L	U	0.5			Sacramento	2016
APW Bulk Tank	Selenium	180-71593-1	0.5	0.25	mg/L	U	0.5			Santa Ana	2018
APW Bulk Tank	Selenium	180-34895-1	1	0.5	mg/L	U	1			Santa Ana	2014
APW Bulk	Selenium	180-1968-1	0.52	0.52	mg/L		0.05			El Monte	2011
APW	Selenium	180-38298-1	0.7	0.7	mg/L		0.5			Boise	2014
APW	Selenium	180-76918-1	1.3	1.3	mg/L		0.1			Salt Lake City	2018

APW Bulk	Silver	180-46604-1	0.0058	0.0058	mg/L	J	0.1	Los Angeles	2015
APW	Silver	180-76918-1	0.0089	0.0089	mg/L	J	0.05	Salt Lake City	2018
APW	Silver	180-13997-1	0.016	0.016	mg/L	J B	0.05	Highland	2012
APW Bulk Tank	Silver	180-70449-1	0.016	0.016	mg/L	J	0.05	Sacramento	2017
APW	Silver	180-38298-1	0.02	0.02	mg/L	J	0.25	Boise	2014
APW	Silver	180-1123-1	0.05	0.025	mg/L	U	0.05	Sacramento	2011
Aqueous IC	Silver	180-1133-1	0.05	0.025	mg/L	U	0.05	Sacramento	2011
APW	Silver	180-1862-1	0.05	0.025	mg/L	U	0.05	Santa Ana	2011
Aqueous IC	Silver	180-1863-1	0.05	0.025	mg/L	U	0.05	Santa Ana	2011
Aqueous IC	Silver	180-1930-1	0.05	0.025	mg/L	U	0.05	Los Angeles	2011
APW	Silver	180-1957-1	0.05	0.025	mg/L	U	0.05	Fresno	2011
APW	Silver	180-1961-1	0.05	0.025	mg/L	U	0.05	Highland	2011
Aqueous IC	Silver	180-1963-2	0.05	0.025	mg/L	U	0.05	Highland	2011
APW	Silver	180-12869-1	0.05	0.025	mg/L	U	0.05	Los Angeles	2012
APW	Silver	180-13030-1	0.05	0.025	mg/L	U	0.05	Highland	2012
APW	Silver	180-12870-1	0.05	0.025	mg/L	U	0.05	Fresno	2012
APW	Silver	180-11964-1	0.05	0.025	mg/L	U	0.05	Sacramento	2012
Aqueous IC	Silver	180-11264-1	0.05	0.025	mg/L	U	0.05	Santa Ana	2012
Aqueous IC	Silver	180-11971-1	0.05	0.025	mg/L	U	0.05	Sacramento	2012
APW	Silver	180-23542-1	0.05	0.025	mg/L	U	0.05	Fresno	2013
APW	Silver	180-23543-1	0.05	0.025	mg/L	U	0.05	Highland	2013
APW	Silver	180-23540-1	0.05	0.025	mg/L	U	0.05	Los Angeles	2013
Aqueous IC	Silver	180-23567-2	0.05	0.025	mg/L	U	0.05	Los Angeles	2013
APW	Silver	180-25501-1	0.05	0.025	mg/L	U	0.05	Sacramento	2013
Aqueous IC	Silver	180-25755-1	0.05	0.025	mg/L	U	0.05	Santa Ana	2013
APW Bulk Tank	Silver	180-35276-1	0.05	0.025	mg/L	U	0.05	Highland	2014
Aqueous IC	Silver	180-35277-1	0.05	0.025	mg/L	U	0.05	Los Angeles	2014
APW	Silver	180-39595-1	0.05	0.025	mg/L	U	0.05	Fresno	2014
APW	Silver	180-42909-1	0.05	0.025	mg/L	U	0.05	Boise	2015
APW	Silver	180-49157-1	0.05	0.025	mg/L	U	0.05	Sacramento	2015
Aqueous IC	Silver	180-42424-1	0.05	0.025	mg/L	U	0.05	Chandler	2015
APW	Silver	180-52525-1	0.05	0.025	mg/L	U	0.05	Boise	2016
APW	Silver	180-58151-1	0.05	0.025	mg/L	U	0.05	Santa Ana	2016
Aqueous IC	Silver	180-57955-1	0.05	0.025	mg/L	U	0.05	Los Angeles	2016

APW Bulk Tank	Silver	180-58156-1	0.05	0.025	mg/L	U	0.05			Santa Ana	2016
APW	Silver	180-64610-1	0.05	0.025	mg/L	U	0.05			Chandler	2017
APW	Silver	180-70635-1	0.05	0.025	mg/L	U	0.05			Salisbury	2017
APW	Silver	180-67799-1	0.05	0.025	mg/L	U	0.05			Santa Ana	2017
APW	Silver	180-64793-1	0.05	0.025	mg/L	U	0.05			Wichita	2017
APW	Silver	180-70452-1	0.05	0.025	mg/L	U	0.05			Sacramento	2017
APW Bulk Tank	Silver	180-68412-1	0.05	0.025	mg/L	U	0.05			Los Angeles	2017
Aqueous IC	Silver	180-67798-1	0.05	0.025	mg/L	U	0.05			Santa Ana	2017
APW	Silver	180-77402-1	0.05	0.025	mg/L	U	0.05			Boise	2018
APW	Silver	180-82402-1	0.05	0.025	mg/L	U	0.05			Clackamas	2018
APW	Silver	180-79848-1	0.05	0.025	mg/L	U	0.05			Los Angeles	2018
APW	Silver	180-79774-1	0.05	0.025	mg/L	U	0.05			Oklahoma City	2018
APW	Silver	180-80854-1	0.05	0.025	mg/L	U	0.05	47	78	Sacramento	2018
APW	Silver	180-81361-1	0.05	0.025	mg/L	U	0.05			Salisbury	2018
APW	Silver	180-78618-1	0.05	0.025	mg/L	U	0.05			Santa Ana	2018
APW	Silver	180-76205-1	0.05	0.025	mg/L	U	0.05			Wichita	2018
APW Bulk Tank	Silver	180-79850-2	0.05	0.025	mg/L	U	0.05			Los Angeles	2018
APW Bulk Tank	Silver	180-78615-1	0.05	0.025	mg/L	U	0.05			Santa Ana	2018
Aqueous IC	Silver	180-80856-1	0.05	0.025	mg/L	U	0.05			Sacramento	2018
Aqueous IC	Silver	180-82080-2	0.05	0.025	mg/L	U	0.05			Santa Ana	2018
APW	Silver	180-68411-1	0.032	0.032	mg/L	J B	0.05			Los Angeles	2017
APW	Silver	180-35960-2	0.037	0.037	mg/L	J	0.1			Sacramento	2014
APW	Silver	180-1933-1	0.043	0.043	mg/L	J	0.05			Los Angeles	2011
APW Bulk Tank	Silver	180-35141-1	0.1	0.05	mg/L	U	0.1			Los Angeles	2014
APW Bulk Tank	Silver	180-34895-1	0.067	0.067	mg/L	J	0.5			Santa Ana	2014
APW	Silver	180-76916-1	0.11	0.11	mg/L		0.05			Chandler	2018
Aqueous IC	Silver	180-46921-1	0.25	0.125	mg/L	U	0.25			Los Angeles	2015
APW	Silver	180-58632-1	0.25	0.125	mg/L	U	0.25			Sacramento	2016
Aqueous IC	Silver	180-58633-1	0.25	0.125	mg/L	U	0.25			Sacramento	2016
APW	Silver	180-66778-1	0.25	0.125	mg/L	U	0.25			Boise	2017
Aqueous IC	Silver	180-23587-1	0.49	0.245	mg/L	U	0.49			Highland	2013
APW Bulk Tank	Silver	180-25297-1	0.5	0.25	mg/L	U	0.5			El Monte	2013
Aqueous IC	Silver	180-34938-1	0.5	0.25	mg/L	U	0.5			Santa Ana	2014
APW Bulk	Silver	180-47817-1	0.5	0.25	mg/L	U	0.5			Highland	2015

APW Bulk Tank	Silver	180-49517-1	0.5	0.25	mg/L	U	0.5	Fresno	2015
APW	Silver	180-57948-2	0.5	0.25	mg/L	U	0.5	Los Angeles	2016
APW Bulk Tank	Silver	180-58407-1	0.5	0.25	mg/L	U	0.5	Fresno	2016
APW Bulk Tank	Silver	180-58654-1	0.5	0.25	mg/L	U	0.5	Highland	2016
APW Bulk Tank	Silver	180-57950-2	0.5	0.25	mg/L	U	0.5	Los Angeles	2016
APW Bulk Tank	Silver	180-58626-1	0.5	0.25	mg/L	U	0.5	Sacramento	2016
APW Bulk Tank	Silver	180-71593-1	0.5	0.25	mg/L	U	0.5	Santa Ana	2018
Aqueous IC	Silver	180-52258-2	0.38	0.38	mg/L	B	0.1	Santa Ana	2015
APW	Silver	180-52260-1	0.44	0.44	mg/L	B	0.05	Santa Ana	2015
APW Bulk	Silver	180-1968-1	6.3	6.3	mg/L		0.05	El Monte	2011
Aqueous IC	Specific Gravity	180-82080-2	0.94	0.94	No Unit		0.01	Santa Ana	2018
APW Bulk Tank	Specific Gravity	180-78615-1	0.96	0.96	No Unit		0.01	Santa Ana	2018
Aqueous IC	Specific Gravity	180-80856-1	0.96	0.96	No Unit		0.01	Sacramento	2018
APW	Specific Gravity	180-77402-1	0.97	0.97	No Unit		0.01	Boise	2018
APW	Specific Gravity	180-76916-1	0.97	0.97	No Unit		0.01	Chandler	2018
APW	Specific Gravity	180-79848-1	0.97	0.97	No Unit		0.01	Los Angeles	2018
APW	Specific Gravity	180-80854-1	0.97	0.97	No Unit		0.01	Sacramento	2018
APW Bulk Tank	Specific Gravity	180-79850-2	0.97	0.97	No Unit		0.01	Los Angeles	2018
APW	Specific Gravity	180-81361-1	0.98	0.98	No Unit		0.01	Salisbury	2018
APW	Specific Gravity	180-76205-1	0.98	0.98	No Unit		0.01	Wichita	2018
APW	Specific Gravity	180-79774-1	0.99	0.99	No Unit		0.01	Oklahoma City	2018
APW	Specific Gravity	180-76918-1	0.99	0.99	No Unit		0.01	Salt Lake City	2018
APW	Specific Gravity	180-82402-1	1	1	No Unit		0.01	Clackamas	2018
APW	Specific Gravity	180-78618-1	1	1	No Unit		0.01	Santa Ana	2018
APW	Tetrachloroethene	180-1961-1	0.046	0.046	mg/L	J	0.2	Highland	2011
APW Bulk Tank	Tetrachloroethene	180-58654-1	0.067	0.067	mg/L	J	0.2	Highland	2016
APW	Tetrachloroethene	180-1957-1	0.069	0.069	mg/L	J	0.2	Fresno	2011
APW Bulk Tank	Tetrachloroethene	180-49517-1	0.094	0.094	mg/L	J	0.2	Fresno	2015
APW	Tetrachloroethene	180-1123-1	0.2	0.1	mg/L	U	0.2	Sacramento	2011
APW Bulk	Tetrachloroethene	180-1968-1	0.2	0.1	mg/L	U	0.2	El Monte	2011
APW	Tetrachloroethene	180-12869-1	0.2	0.1	mg/L	U	0.2	Los Angeles	2012
APW	Tetrachloroethene	180-12870-1	0.2	0.1	mg/L	U	0.2	Fresno	2012
APW	Tetrachloroethene	180-11964-1	0.2	0.1	mg/L	U	0.2	Sacramento	2012
Aqueous IC	Tetrachloroethene	180-11264-1	0.2	0.1	mg/L	U	0.2	Santa Ana	2012

Aqueous IC	Tetrachloroethene	180-11971-1	0.2	0.1	mg/L	U	0.2	Sacramento	2012
APW	Tetrachloroethene	180-23542-1	0.2	0.1	mg/L	U	0.2	Fresno	2013
APW	Tetrachloroethene	180-23543-1	0.2	0.1	mg/L	U	0.2	Highland	2013
APW	Tetrachloroethene	180-23540-1	0.2	0.1	mg/L	U	0.2	Los Angeles	2013
APW	Tetrachloroethene	180-25501-1	0.2	0.1	mg/L	U	0.2	Sacramento	2013
Aqueous IC	Tetrachloroethene	180-35277-1	0.2	0.1	mg/L	U	0.2	Los Angeles	2014
APW	Tetrachloroethene	180-35960-2	0.2	0.1	mg/L	U	0.2	Sacramento	2014
APW	Tetrachloroethene	180-38298-1	0.2	0.1	mg/L	U	0.2	Boise	2014
APW	Tetrachloroethene	180-42909-1	0.2	0.1	mg/L	U	0.2	Boise	2015
APW	Tetrachloroethene	180-49157-1	0.2	0.1	mg/L	U	0.2	Sacramento	2015
Aqueous IC	Tetrachloroethene	180-42424-1	0.2	0.1	mg/L	U	0.2	Chandler	2015
Aqueous IC	Tetrachloroethene	180-46921-1	0.2	0.1	mg/L	U	0.2	Los Angeles	2015
APW Bulk	Tetrachloroethene	180-46604-1	0.2	0.1	mg/L	U	0.2	Los Angeles	2015
APW	Tetrachloroethene	180-52260-1	0.2	0.1	mg/L	U	0.2	Santa Ana	2015
APW	Tetrachloroethene	180-52525-1	0.2	0.1	mg/L	U	0.2	Boise	2016
APW	Tetrachloroethene	180-57948-2	0.2	0.1	mg/L	U	0.2	Los Angeles	2016
APW	Tetrachloroethene	180-58151-1	0.2	0.1	mg/L	U	0.2	Santa Ana	2016
Aqueous IC	Tetrachloroethene	180-57955-1	0.2	0.1	mg/L	U	0.2	Los Angeles	2016
APW Bulk Tank	Tetrachloroethene	180-57950-2	0.2	0.1	mg/L	U	0.2	Los Angeles	2016
APW Bulk Tank	Tetrachloroethene	180-58626-1	0.2	0.1	mg/L	U	0.2	Sacramento	2016
APW Bulk Tank	Tetrachloroethene	180-58156-1	0.2	0.1	mg/L	U	0.2	Santa Ana	2016
APW	Tetrachloroethene	180-64610-1	0.2	0.1	mg/L	U	0.2	Chandler	2017
APW	Tetrachloroethene	180-68411-1	0.2	0.1	mg/L	U	0.2	Los Angeles	2017
APW	Tetrachloroethene	180-70635-1	0.2	0.1	mg/L	U	0.2	Salisbury	2017
APW	Tetrachloroethene	180-67799-1	0.2	0.1	mg/L	U	0.2	Santa Ana	2017
APW	Tetrachloroethene	180-64793-1	0.2	0.1	mg/L	U	0.2	Wichita	2017
APW	Tetrachloroethene	180-70452-1	0.2	0.1	mg/L	U	0.2	Sacramento	2017
APW Bulk Tank	Tetrachloroethene	180-70449-1	0.2	0.1	mg/L	U	0.2	Sacramento	2017
Aqueous IC	Tetrachloroethene	180-67798-1	0.2	0.1	mg/L	U	0.2	Santa Ana	2017
APW	Tetrachloroethene	180-77402-1	0.2	0.1	mg/L	U	0.2	Boise	2018
APW	Tetrachloroethene	180-76916-1	0.2	0.1	mg/L	U	0.2	Chandler	2018
APW	Tetrachloroethene	180-82402-1	0.2	0.1	mg/L	U	0.2	Clackamas	2018
APW	Tetrachloroethene	180-81361-1	0.2	0.1	mg/L	U	0.2	Salisbury	2018
APW	Tetrachloroethene	180-76918-1	0.2	0.1	mg/L	U	0.2	Salt Lake City	2018

APW	Tetrachloroethene	180-78618-1	0.2	0.1	mg/L	U	0.2			Santa Ana	2018
APW	Tetrachloroethene	180-76205-1	0.2	0.1	mg/L	U	0.2			Wichita	2018
APW Bulk Tank	Tetrachloroethene	180-79850-2	0.2	0.1	mg/L	U	0.2	47	78	Los Angeles	2018
Aqueous IC	Tetrachloroethene	180-80856-1	0.2	0.1	mg/L	U	0.2			Sacramento	2018
Aqueous IC	Tetrachloroethene	180-82080-2	0.2	0.1	mg/L	U	0.2			Santa Ana	2018
APW	Tetrachloroethene	180-1933-1	0.11	0.11	mg/L	J	0.2			Los Angeles	2011
APW	Tetrachloroethene	180-66778-1	0.11	0.11	mg/L	J	0.2			Boise	2017
APW	Tetrachloroethene	180-1862-1	0.12	0.12	mg/L	J	0.2			Santa Ana	2011
Aqueous IC	Tetrachloroethene	180-23587-1	0.25	0.125	mg/L	U	0.25			Highland	2013
Aqueous IC	Tetrachloroethene	180-58633-1	0.13	0.13	mg/L	J	0.2			Sacramento	2016
APW	Tetrachloroethene	180-79848-1	0.13	0.13	mg/L	J	0.2			Los Angeles	2018
APW	Tetrachloroethene	180-58632-1	0.14	0.14	mg/L	J	0.2			Sacramento	2016
APW	Tetrachloroethene	180-39595-1	0.15	0.15	mg/L	J	0.2			Fresno	2014
Aqueous IC	Tetrachloroethene	180-1133-2	0.5	0.25	mg/L	U	0.5			Sacramento	2011
Aqueous IC	Tetrachloroethene	180-1863-2	0.5	0.25	mg/L	U	0.5			Santa Ana	2011
Aqueous IC	Tetrachloroethene	180-1930-2	0.5	0.25	mg/L	U	0.5			Los Angeles	2011
Aqueous IC	Tetrachloroethene	180-1963-1	0.5	0.25	mg/L	U	0.5			Highland	2011
Aqueous IC	Tetrachloroethene	180-23567-1	0.5	0.25	mg/L	U	0.5			Los Angeles	2013
APW Bulk Tank	Tetrachloroethene	180-25297-1	0.5	0.25	mg/L	U	0.5			El Monte	2013
Aqueous IC	Tetrachloroethene	180-34938-2	0.5	0.25	mg/L	U	0.5			Santa Ana	2014
APW Bulk Tank	Tetrachloroethene	180-71593-1	0.28	0.28	mg/L	*	0.2			Santa Ana	2018
APW	Tetrachloroethene	180-79774-1	0.44	0.44	mg/L		0.2			Oklahoma City	2018
APW Bulk Tank	Tetrachloroethene	180-34895-1	0.47	0.47	mg/L	J	0.5			Santa Ana	2014
Aqueous IC	Tetrachloroethene	180-52258-1	0.57	0.57	mg/L		0.5			Santa Ana	2015
APW Bulk Tank	Tetrachloroethene	180-58407-1	0.64	0.64	mg/L		0.2			Fresno	2016
APW	Tetrachloroethene	180-13997-1	0.79	0.79	mg/L		0.2			Highland	2012
APW	Tetrachloroethene	180-80854-1	4	2	mg/L	U	4			Sacramento	2018
APW Bulk Tank	Tetrachloroethene	180-78615-1	2.2	2.2	mg/L		0.2			Santa Ana	2018
APW	Tetrachloroethene	180-13030-1	3	3	mg/L		0.2			Highland	2012
APW Bulk Tank	Tetrachloroethene	180-35276-1	3.6	3.6	mg/L		0.2			Highland	2014
APW Bulk Tank	Tetrachloroethene	180-35141-1	4.3	4.3	mg/L		0.2			Los Angeles	2014
APW Bulk Tank	Tetrachloroethene	180-68412-1	9.1	9.1	mg/L		2			Los Angeles	2017
APW Bulk	Tetrachloroethene	180-47817-1	11	11	mg/L		0.8			Highland	2015
Aqueous IC	Tetrachloroethene	180-25755-1	40	20	mg/L	U	40			Santa Ana	2013

APW	Trichloroethene	180-66778-1	0.051	0.051	mg/L	J	0.2	Boise	2017
APW Bulk Tank	Trichloroethene	180-79850-2	0.064	0.064	mg/L	J	0.2	Los Angeles	2018
APW Bulk Tank	Trichloroethene	180-78615-1	0.065	0.065	mg/L	J	0.2	Santa Ana	2018
APW Bulk Tank	Trichloroethene	180-35276-1	0.086	0.086	mg/L	J	0.2	Highland	2014
APW	Trichloroethene	180-1123-1	0.2	0.1	mg/L	U	0.2	Sacramento	2011
APW	Trichloroethene	180-1933-1	0.2	0.1	mg/L	U	0.2	Los Angeles	2011
APW	Trichloroethene	180-1862-1	0.2	0.1	mg/L	U	0.2	Santa Ana	2011
APW	Trichloroethene	180-1957-1	0.2	0.1	mg/L	U	0.2	Fresno	2011
APW	Trichloroethene	180-1961-1	0.2	0.1	mg/L	U	0.2	Highland	2011
APW Bulk	Trichloroethene	180-1968-1	0.2	0.1	mg/L	U	0.2	El Monte	2011
APW	Trichloroethene	180-12869-1	0.2	0.1	mg/L	U	0.2	Los Angeles	2012
APW	Trichloroethene	180-13030-1	0.2	0.1	mg/L	U	0.2	Highland	2012
APW	Trichloroethene	180-13997-1	0.2	0.1	mg/L	U	0.2	Highland	2012
APW	Trichloroethene	180-12870-1	0.2	0.1	mg/L	U	0.2	Fresno	2012
APW	Trichloroethene	180-11964-1	0.2	0.1	mg/L	U	0.2	Sacramento	2012
Aqueous IC	Trichloroethene	180-11264-1	0.2	0.1	mg/L	U	0.2	Santa Ana	2012
Aqueous IC	Trichloroethene	180-11971-1	0.2	0.1	mg/L	U	0.2	Sacramento	2012
APW	Trichloroethene	180-23542-1	0.2	0.1	mg/L	U	0.2	Fresno	2013
APW	Trichloroethene	180-23543-1	0.2	0.1	mg/L	U	0.2	Highland	2013
APW	Trichloroethene	180-23540-1	0.2	0.1	mg/L	U	0.2	Los Angeles	2013
APW	Trichloroethene	180-25501-1	0.2	0.1	mg/L	U	0.2	Sacramento	2013
APW Bulk Tank	Trichloroethene	180-35141-1	0.2	0.1	mg/L	U	0.2	Los Angeles	2014
Aqueous IC	Trichloroethene	180-35277-1	0.2	0.1	mg/L	U	0.2	Los Angeles	2014
APW	Trichloroethene	180-35960-2	0.2	0.1	mg/L	U	0.2	Sacramento	2014
APW	Trichloroethene	180-38298-1	0.2	0.1	mg/L	U	0.2	Boise	2014
APW	Trichloroethene	180-39595-1	0.2	0.1	mg/L	U	0.2	Fresno	2014
APW	Trichloroethene	180-42909-1	0.2	0.1	mg/L	U	0.2	Boise	2015
APW	Trichloroethene	180-49157-1	0.2	0.1	mg/L	U	0.2	Sacramento	2015
Aqueous IC	Trichloroethene	180-42424-1	0.2	0.1	mg/L	U	0.2	Chandler	2015
Aqueous IC	Trichloroethene	180-46921-1	0.2	0.1	mg/L	U	0.2	Los Angeles	2015
APW Bulk	Trichloroethene	180-47817-1	0.2	0.1	mg/L	U	0.2	Highland	2015
APW Bulk	Trichloroethene	180-46604-1	0.2	0.1	mg/L	U	0.2	Los Angeles	2015
APW	Trichloroethene	180-52260-1	0.2	0.1	mg/L	U	0.2	Santa Ana	2015
APW	Trichloroethene	180-52525-1	0.2	0.1	mg/L	U	0.2	Boise	2016

APW	Trichloroethene	180-57948-2	0.2	0.1	mg/L	U	0.2			Los Angeles	2016
APW	Trichloroethene	180-58632-1	0.2	0.1	mg/L	U	0.2			Sacramento	2016
APW	Trichloroethene	180-58151-1	0.2	0.1	mg/L	U	0.2			Santa Ana	2016
Aqueous IC	Trichloroethene	180-57955-1	0.2	0.1	mg/L	U	0.2			Los Angeles	2016
Aqueous IC	Trichloroethene	180-58633-1	0.2	0.1	mg/L	U	0.2			Sacramento	2016
APW Bulk Tank	Trichloroethene	180-58407-1	0.2	0.1	mg/L	U	0.2			Fresno	2016
APW Bulk Tank	Trichloroethene	180-58654-1	0.2	0.1	mg/L	U	0.2			Highland	2016
APW Bulk Tank	Trichloroethene	180-57950-2	0.2	0.1	mg/L	U	0.2			Los Angeles	2016
APW Bulk Tank	Trichloroethene	180-58626-1	0.2	0.1	mg/L	U	0.2			Sacramento	2016
APW Bulk Tank	Trichloroethene	180-58156-1	0.2	0.1	mg/L	U	0.2			Santa Ana	2016
APW	Trichloroethene	180-64610-1	0.2	0.1	mg/L	U	0.2			Chandler	2017
APW	Trichloroethene	180-68411-1	0.2	0.1	mg/L	U	0.2			Los Angeles	2017
APW	Trichloroethene	180-70635-1	0.2	0.1	mg/L	U	0.2	47	78	Salisbury	2017
APW	Trichloroethene	180-67799-1	0.2	0.1	mg/L	U	0.2			Santa Ana	2017
APW	Trichloroethene	180-64793-1	0.2	0.1	mg/L	U	0.2			Wichita	2017
APW	Trichloroethene	180-70452-1	0.2	0.1	mg/L	U	0.2			Sacramento	2017
APW Bulk Tank	Trichloroethene	180-68412-1	0.2	0.1	mg/L	U	0.2			Los Angeles	2017
APW Bulk Tank	Trichloroethene	180-70449-1	0.2	0.1	mg/L	U	0.2			Sacramento	2017
Aqueous IC	Trichloroethene	180-67798-1	0.2	0.1	mg/L	U	0.2			Santa Ana	2017
APW	Trichloroethene	180-77402-1	0.2	0.1	mg/L	U	0.2			Boise	2018
APW	Trichloroethene	180-76916-1	0.2	0.1	mg/L	U	0.2			Chandler	2018
APW	Trichloroethene	180-82402-1	0.2	0.1	mg/L	U	0.2			Clackamas	2018
APW	Trichloroethene	180-79848-1	0.2	0.1	mg/L	U	0.2			Los Angeles	2018
APW	Trichloroethene	180-79774-1	0.2	0.1	mg/L	U	0.2			Oklahoma City	2018
APW	Trichloroethene	180-81361-1	0.2	0.1	mg/L	U F2 F1	0.2			Salisbury	2018
APW	Trichloroethene	180-76918-1	0.2	0.1	mg/L	U	0.2			Salt Lake City	2018
APW	Trichloroethene	180-78618-1	0.2	0.1	mg/L	U	0.2			Santa Ana	2018
APW	Trichloroethene	180-76205-1	0.2	0.1	mg/L	U	0.2			Wichita	2018
APW Bulk Tank	Trichloroethene	180-71593-1	0.2	0.1	mg/L	U	0.2			Santa Ana	2018
Aqueous IC	Trichloroethene	180-80856-1	0.2	0.1	mg/L	U	0.2			Sacramento	2018
Aqueous IC	Trichloroethene	180-82080-2	0.2	0.1	mg/L	U	0.2			Santa Ana	2018
Aqueous IC	Trichloroethene	180-23587-1	0.25	0.125	mg/L	U	0.25			Highland	2013
Aqueous IC	Trichloroethene	180-1133-2	0.5	0.25	mg/L	U	0.5			Sacramento	2011
Aqueous IC	Trichloroethene	180-1863-2	0.5	0.25	mg/L	U	0.5			Santa Ana	2011

Aqueous IC	Trichloroethene	180-1930-2	0.5	0.25	mg/L	U	0.5	Los Angeles	2011
Aqueous IC	Trichloroethene	180-1963-1	0.5	0.25	mg/L	U	0.5	Highland	2011
Aqueous IC	Trichloroethene	180-23567-1	0.5	0.25	mg/L	U	0.5	Los Angeles	2013
APW Bulk Tank	Trichloroethene	180-25297-1	0.5	0.25	mg/L	U	0.5	El Monte	2013
APW Bulk Tank	Trichloroethene	180-34895-1	0.5	0.25	mg/L	U	0.5	Santa Ana	2014
Aqueous IC	Trichloroethene	180-34938-2	0.5	0.25	mg/L	U	0.5	Santa Ana	2014
Aqueous IC	Trichloroethene	180-52258-1	0.5	0.25	mg/L	U	0.5	Santa Ana	2015
APW Bulk Tank	Trichloroethene	180-49517-1	0.37	0.37	mg/L		0.2	Fresno	2015
APW	Trichloroethene	180-80854-1	4	2	mg/L	U	4	Sacramento	2018
Aqueous IC	Trichloroethene	180-25755-1	40	20	mg/L	U	40	Santa Ana	2013
Aqueous IC	Vinyl Chloride	180-23587-1	0.1	0.05	mg/L	U	0.1	Highland	2013
APW	Vinyl Chloride	180-1123-1	0.2	0.1	mg/L	U	0.2	Sacramento	2011
Aqueous IC	Vinyl Chloride	180-1133-2	0.2	0.1	mg/L	U	0.2	Sacramento	2011
APW	Vinyl Chloride	180-1933-1	0.2	0.1	mg/L	U	0.2	Los Angeles	2011
APW	Vinyl Chloride	180-1862-1	0.2	0.1	mg/L	U	0.2	Santa Ana	2011
Aqueous IC	Vinyl Chloride	180-1863-2	0.2	0.1	mg/L	U	0.2	Santa Ana	2011
Aqueous IC	Vinyl Chloride	180-1930-2	0.2	0.1	mg/L	U	0.2	Los Angeles	2011
APW	Vinyl Chloride	180-1957-1	0.2	0.1	mg/L	U	0.2	Fresno	2011
APW	Vinyl Chloride	180-1961-1	0.2	0.1	mg/L	U	0.2	Highland	2011
Aqueous IC	Vinyl Chloride	180-1963-1	0.2	0.1	mg/L	U	0.2	Highland	2011
APW Bulk	Vinyl Chloride	180-1968-1	0.2	0.1	mg/L	U	0.2	El Monte	2011
APW	Vinyl Chloride	180-12869-1	0.2	0.1	mg/L	U	0.2	Los Angeles	2012
APW	Vinyl Chloride	180-13030-1	0.2	0.1	mg/L	U	0.2	Highland	2012
APW	Vinyl Chloride	180-13997-1	0.2	0.1	mg/L	U	0.2	Highland	2012
APW	Vinyl Chloride	180-12870-1	0.2	0.1	mg/L	U	0.2	Fresno	2012
APW	Vinyl Chloride	180-11964-1	0.2	0.1	mg/L	U	0.2	Sacramento	2012
Aqueous IC	Vinyl Chloride	180-11264-1	0.2	0.1	mg/L	U	0.2	Santa Ana	2012
Aqueous IC	Vinyl Chloride	180-11971-1	0.2	0.1	mg/L	U	0.2	Sacramento	2012
APW	Vinyl Chloride	180-23542-1	0.2	0.1	mg/L	U	0.2	Fresno	2013
APW	Vinyl Chloride	180-23543-1	0.2	0.1	mg/L	U	0.2	Highland	2013
APW	Vinyl Chloride	180-23540-1	0.2	0.1	mg/L	U	0.2	Los Angeles	2013
Aqueous IC	Vinyl Chloride	180-23567-1	0.2	0.1	mg/L	U	0.2	Los Angeles	2013
APW	Vinyl Chloride	180-25501-1	0.2	0.1	mg/L	U	0.2	Sacramento	2013
APW Bulk Tank	Vinyl Chloride	180-25297-1	0.2	0.1	mg/L	U	0.2	El Monte	2013

APW Bulk Tank	Vinyl Chloride	180-35276-1	0.2	0.1	mg/L	U	0.2			Highland	2014
APW Bulk Tank	Vinyl Chloride	180-35141-1	0.2	0.1	mg/L	U	0.2			Los Angeles	2014
Aqueous IC	Vinyl Chloride	180-35277-1	0.2	0.1	mg/L	U	0.2			Los Angeles	2014
APW	Vinyl Chloride	180-35960-2	0.2	0.1	mg/L	U	0.2			Sacramento	2014
APW Bulk Tank	Vinyl Chloride	180-34895-1	0.2	0.1	mg/L	U	0.2			Santa Ana	2014
Aqueous IC	Vinyl Chloride	180-34938-2	0.2	0.1	mg/L	U	0.2			Santa Ana	2014
APW	Vinyl Chloride	180-38298-1	0.2	0.1	mg/L	U	0.2			Boise	2014
APW	Vinyl Chloride	180-39595-1	0.2	0.1	mg/L	U	0.2			Fresno	2014
APW	Vinyl Chloride	180-42909-1	0.2	0.1	mg/L	U	0.2			Boise	2015
APW	Vinyl Chloride	180-49157-1	0.2	0.1	mg/L	U	0.2			Sacramento	2015
Aqueous IC	Vinyl Chloride	180-42424-1	0.2	0.1	mg/L	U	0.2			Chandler	2015
Aqueous IC	Vinyl Chloride	180-46921-1	0.2	0.1	mg/L	U	0.2			Los Angeles	2015
APW Bulk	Vinyl Chloride	180-47817-1	0.2	0.1	mg/L	U	0.2			Highland	2015
APW Bulk	Vinyl Chloride	180-46604-1	0.2	0.1	mg/L	U	0.2			Los Angeles	2015
APW	Vinyl Chloride	180-52260-1	0.2	0.1	mg/L	U	0.2			Santa Ana	2015
Aqueous IC	Vinyl Chloride	180-52258-1	0.2	0.1	mg/L	U	0.2			Santa Ana	2015
APW Bulk Tank	Vinyl Chloride	180-49517-1	0.2	0.1	mg/L	U	0.2			Fresno	2015
APW	Vinyl Chloride	180-52525-1	0.2	0.1	mg/L	U	0.2			Boise	2016
APW	Vinyl Chloride	180-57948-2	0.2	0.1	mg/L	U	0.2			Los Angeles	2016
APW	Vinyl Chloride	180-58632-1	0.2	0.1	mg/L	U	0.2			Sacramento	2016
APW	Vinyl Chloride	180-58151-1	0.2	0.1	mg/L	U	0.2			Santa Ana	2016
Aqueous IC	Vinyl Chloride	180-57955-1	0.2	0.1	mg/L	U	0.2			Los Angeles	2016
Aqueous IC	Vinyl Chloride	180-58633-1	0.2	0.1	mg/L	U	0.2	47	78	Sacramento	2016
APW Bulk Tank	Vinyl Chloride	180-58407-1	0.2	0.1	mg/L	U	0.2			Fresno	2016
APW Bulk Tank	Vinyl Chloride	180-58654-1	0.2	0.1	mg/L	U	0.2			Highland	2016
APW Bulk Tank	Vinyl Chloride	180-57950-2	0.2	0.1	mg/L	U	0.2			Los Angeles	2016
APW Bulk Tank	Vinyl Chloride	180-58626-1	0.2	0.1	mg/L	U	0.2			Sacramento	2016
APW Bulk Tank	Vinyl Chloride	180-58156-1	0.2	0.1	mg/L	U	0.2			Santa Ana	2016
APW	Vinyl chloride	180-66778-1	0.2	0.1	mg/L	U	0.2			Boise	2017
APW	Vinyl chloride	180-64610-1	0.2	0.1	mg/L	U	0.2			Chandler	2017
APW	Vinyl chloride	180-68411-1	0.2	0.1	mg/L	U	0.2			Los Angeles	2017
APW	Vinyl chloride	180-70635-1	0.2	0.1	mg/L	U	0.2			Salisbury	2017
APW	Vinyl chloride	180-67799-1	0.2	0.1	mg/L	U	0.2			Santa Ana	2017
APW	Vinyl chloride	180-64793-1	0.2	0.1	mg/L	U	0.2			Wichita	2017

APW	Vinyl chloride	180-70452-1	0.2	0.1	mg/L	U	0.2	Sacramento	2017
APW Bulk Tank	Vinyl chloride	180-68412-1	0.2	0.1	mg/L	U	0.2	Los Angeles	2017
APW Bulk Tank	Vinyl chloride	180-70449-1	0.2	0.1	mg/L	U	0.2	Sacramento	2017
Aqueous IC	Vinyl chloride	180-67798-1	0.2	0.1	mg/L	U	0.2	Santa Ana	2017
APW	Vinyl chloride	180-77402-1	0.2	0.1	mg/L	U	0.2	Boise	2018
APW	Vinyl chloride	180-76916-1	0.2	0.1	mg/L	U	0.2	Chandler	2018
APW	Vinyl chloride	180-82402-1	0.2	0.1	mg/L	U	0.2	Clackamas	2018
APW	Vinyl chloride	180-79848-1	0.2	0.1	mg/L	U	0.2	Los Angeles	2018
APW	Vinyl chloride	180-79774-1	0.2	0.1	mg/L	U	0.2	Oklahoma City	2018
APW	Vinyl chloride	180-81361-1	0.2	0.1	mg/L	U	0.2	Salisbury	2018
APW	Vinyl chloride	180-76918-1	0.2	0.1	mg/L	U	0.2	Salt Lake City	2018
APW	Vinyl chloride	180-78618-1	0.2	0.1	mg/L	U	0.2	Santa Ana	2018
APW	Vinyl chloride	180-76205-1	0.2	0.1	mg/L	U	0.2	Wichita	2018
APW Bulk Tank	Vinyl chloride	180-79850-2	0.2	0.1	mg/L	U	0.2	Los Angeles	2018
APW Bulk Tank	Vinyl chloride	180-78615-1	0.2	0.1	mg/L	U	0.2	Santa Ana	2018
APW Bulk Tank	Vinyl chloride	180-71593-1	0.2	0.1	mg/L	U	0.2	Santa Ana	2018
Aqueous IC	Vinyl chloride	180-80856-1	0.2	0.1	mg/L	U	0.2	Sacramento	2018
Aqueous IC	Vinyl chloride	180-82080-2	0.2	0.1	mg/L	U	0.2	Santa Ana	2018
APW	Vinyl chloride	180-80854-1	4	2	mg/L	U	4	Sacramento	2018
Aqueous IC	Vinyl Chloride	180-25755-1	40	20	mg/L	U	40	Santa Ana	2013

APPENDIX III-4.C

2019 AR Data Summary for Waste Mineral Spirit Solvent Tank Bottoms

MATRIX	PARAMETER	LAB_SAMPLE_ID	RESULT	RANKED DATA	UNITS	QUALIFIER	REPORTING LIMIT	Uth VALUE	COUNT	FACILITY	YEAR
PWS Tank Bottoms	1,1-Dichloroethene	C8E200313001	0.2	0.1	mg/L	U	0.2			Boise	2008
PWS Tank Bottoms	1,1-Dichloroethene	C8H200252001	0.2	0.1	mg/L	U	0.2			Dodge City	2008
PWS Tank Bottoms	1,1-Dichloroethene	C8F130326001	0.2	0.1	mg/L	U	0.2			Fargo	2008
PWS Tank Bottoms	1,1-Dichloroethene	C8D030320001	0.2	0.1	mg/L	U	0.2			Salt Lake City	2008
PWS Tank Bottoms	1,1-Dichloroethene	C8H080290001	0.2	0.1	mg/L	U	0.2			Wichita	2008
PWS Tank Bottoms	1,1-Dichloroethene	C9E090111001	0.2	0.1	mg/L	U	0.2			Boise	2009
PWS Tank Bottoms	1,1-Dichloroethene	C9E130321001	0.2	0.1	mg/L	U	0.2			Chandler	2009
PWS Tank Bottoms	1,1-Dichloroethene	C9K120427001	0.2	0.1	mg/L	U	0.2			Clackamas	2009
PWS Tank Bottoms	1,1-Dichloroethene	C9H040289003	0.2	0.1	mg/L	U	0.2			Dodge City	2009
PWS Tank Bottoms	1,1-Dichloroethene	C9E210290002	0.2	0.1	mg/L	U	0.2			Oklahoma City	2009
PWS Tank Bottoms	1,1-Dichloroethene	C9D230261001	0.2	0.1	mg/L	U	0.2			Salt Lake City	2009
PWS Tank Bottoms	1,1-Dichloroethene	C9I170278001	0.2	0.1	mg/L	U	0.2			Santa Ana	2009
PWS Tank Bottoms	1,1-Dichloroethene	C9H040288003	0.2	0.1	mg/L	U	0.2			Wichita	2009
PWS Tank Bottoms	1,1-Dichloroethene	C0H100558001	0.2	0.1	mg/L	U	0.2			Boise	2010
PWS Tank Bottoms	1,1-Dichloroethene	C0L080465001	0.2	0.1	mg/L	U	0.2			Clackamas	2010
PWS Tank Bottoms	1,1-Dichloroethene	C0D220565001	0.2	0.1	mg/L	U	0.2			Salt Lake City	2010
PWS Tank Bottoms	1,1-Dichloroethene	180-2334-1	0.2	0.1	mg/L	U	0.2			Boise	2011
PWS Tank Bottoms	1,1-Dichloroethene	180-2452-1	0.2	0.1	mg/L	U	0.2			Chandler	2011
PWS Tank Bottoms	1,1-Dichloroethene	180-2462-1	0.2	0.1	mg/L	U	0.2			Santa Ana	2011
PWS Tank Bottoms	1,1-Dichloroethene	180-10005-1	0.2	0.1	mg/L	U	0.2			Boise	2012
PWS Tank Bottoms	1,1-Dichloroethene	180-10295-1	0.2	0.1	mg/L	U	0.2			Salt Lake City	2012
PWS Tank Bottoms	1,1-Dichloroethene	180-6080-1	0.2	0.1	mg/L	U	0.2			Sioux Falls	2012
PWS Tank Bottoms	1,1-Dichloroethene	180-20714-1	0.2	0.1	mg/L	U	0.2			Salt Lake City	2013
PWS Tank Bottoms	1,1-Dichloroethene	180-21899-1	0.2	0.1	mg/L	U	0.2			Tulsa	2013
PWS Tank Bottoms	1,1-Dichloroethene	180-23127-1	0.2	0.1	mg/L	U	0.2			Wichita	2013
PWS Tank Bottoms	1,1-Dichloroethene	180-35833-1	0.2	0.1	mg/L	U	0.2			Dodge City	2014
PWS Tank Bottoms	1,1-Dichloroethene	180-32306-1	0.2	0.1	mg/L	U	0.2			Salt Lake City	2014
PWS Tank Bottoms	1,1-Dichloroethene	180-44034-1	0.2	0.1	mg/L	U	0.2			Boise	2015
PWS Tank Bottoms	1,1-Dichloroethene	180-43578-1	0.2	0.1	mg/L	U	0.2			Chandler	2015
PWS Tank Bottoms	1,1-Dichloroethene	180-43573-1	0.2	0.1	mg/L	U	0.2			Salt Lake City	2015
PWS Tank Bottoms	1,1-Dichloroethene	180-51960-1	0.2	0.1	mg/L	U	0.2			Farmington	2015
PWS Tank Bottoms	1,1-Dichloroethene	180-52526-1	0.2	0.1	mg/L	U H	0.2			Boise	2016
PWS Tank Bottoms	1,1-Dichloroethene	180-53484-1	0.2	0.1	mg/L	U	0.2			Chandler	2016

PWS Tank Bottoms	1,1-Dichloroethene	180-53880-1	0.2	0.1	mg/L	U	0.2			Omaha	2016
PWS Tank Bottoms	1,1-Dichloroethene	180-67590-2	0.2	0.1	mg/L	U	0.2	35	56	Boise	2017
PWS Tank Bottoms	1,1-Dichloroethene	180-65572-1	0.2	0.1	mg/L	U	0.2			Chandler	2017
PWS Tank Bottoms	1,1-Dichloroethene	180-68912-1	0.2	0.1	mg/L	U	0.2			Farmington	2017
PWS Tank Bottoms	1,1-Dichloroethene	180-65524-1	0.2	0.1	mg/L	U	0.2			Salt Lake City	2017
PWS Tank Bottoms	1,1-Dichloroethene	180-77050-1	0.2	0.1	mg/L	U	0.2			Boise	2018
PWS Tank Bottoms	1,1-Dichloroethene	180-80926-1	0.2	0.1	mg/L	U	0.2			Farmington	2018
PWS Tank Bottoms	1,1-Dichloroethene	180-82828-1	0.2	0.1	mg/L	U	0.2			Oklahoma City	2018
PWS Tank Bottoms	1,1-Dichloroethene	180-80846-1	0.2	0.1	mg/L	U	0.2			Sacramento	2018
PWS Tank Bottoms	1,1-Dichloroethene	180-77711-1	0.2	0.1	mg/L	U	0.2			Salt Lake City	2018
PWS Tank Bottoms	1,1-Dichloroethene	C8H250147001	0.25	0.125	mg/L	U	0.25			Blaine	2008
PWS Tank Bottoms	1,1-Dichloroethene	C8H250154001	0.25	0.125	mg/L	U	0.25			Blaine	2008
PWS Tank Bottoms	1,1-Dichloroethene	C8J030260001	0.25	0.125	mg/L	U	0.25			Eagan	2008
PWS Tank Bottoms	1,1-Dichloroethene	C8J030263001	0.25	0.125	mg/L	U	0.25			Eagan	2008
PWS Tank Bottoms	1,1-Dichloroethene	C9F060175001	0.25	0.125	mg/L	U	0.25			Wichita	2009
PWS Tank Bottoms	1,1-Dichloroethene	C0I090490001	0.25	0.125	mg/L	U	0.25			Santa Ana	2010
PWS Tank Bottoms	1,1-Dichloroethene	180-27070-1	0.25	0.125	mg/L	U	0.25			Sacramento	2013
PWS Tank Bottoms	1,1-Dichloroethene	180-32876-1	0.25	0.125	mg/L	U	0.25			Boise	2014
PWS Tank Bottoms	1,1-Dichloroethene	180-56702-1	0.25	0.125	mg/L	U	0.25			Farmington	2016
PWS Tank Bottoms	1,1-Dichloroethene	180-53843-1	0.25	0.125	mg/L	U	0.25			Salt Lake City	2016
PWS Tank Bottoms	1,1-Dichloroethene	180-74608-1	0.25	0.125	mg/L	U *	0.25			Salisbury	2018
PWS Tank Bottoms	1,1-Dichloroethene	C0A200514001	0.5	0.25	mg/L	U	0.5			Sacramento	2010
PWS Tank Bottoms	1,1-Dichloroethene	180-604-11	0.5	0.25	mg/L	U	0.5			Salt Lake City	2011
PWS Tank Bottoms	1,2-Dichloroethane	C8E200313001	0.2	0.1	mg/L	U	0.2			Boise	2008
PWS Tank Bottoms	1,2-Dichloroethane	C8H200252001	0.2	0.1	mg/L	U	0.2			Dodge City	2008
PWS Tank Bottoms	1,2-Dichloroethane	C8F130326001	0.2	0.1	mg/L	U	0.2			Fargo	2008
PWS Tank Bottoms	1,2-Dichloroethane	C8D030320001	0.2	0.1	mg/L	U	0.2			Salt Lake City	2008
PWS Tank Bottoms	1,2-Dichloroethane	C8H080290001	0.2	0.1	mg/L	U	0.2			Wichita	2008
PWS Tank Bottoms	1,2-Dichloroethane	C9E090111001	0.2	0.1	mg/L	U	0.2			Boise	2009
PWS Tank Bottoms	1,2-Dichloroethane	C9E130321001	0.2	0.1	mg/L	U	0.2			Chandler	2009
PWS Tank Bottoms	1,2-Dichloroethane	C9K120427001	0.2	0.1	mg/L	U	0.2			Clackamas	2009
PWS Tank Bottoms	1,2-Dichloroethane	C9H040289003	0.2	0.1	mg/L	U	0.2			Dodge City	2009
PWS Tank Bottoms	1,2-Dichloroethane	C9E210290002	0.2	0.1	mg/L	U	0.2			Oklahoma City	2009
PWS Tank Bottoms	1,2-Dichloroethane	C9D230261001	0.2	0.1	mg/L	U	0.2			Salt Lake City	2009

PWS Tank Bottoms	1,2-Dichloroethane	C9I170278001	0.2	0.1	mg/L	U	0.2			Santa Ana	2009
PWS Tank Bottoms	1,2-Dichloroethane	C9H040288003	0.2	0.1	mg/L	U	0.2			Wichita	2009
PWS Tank Bottoms	1,2-Dichloroethane	C0H100558001	0.2	0.1	mg/L	U	0.2			Boise	2010
PWS Tank Bottoms	1,2-Dichloroethane	C0L080465001	0.2	0.1	mg/L	U	0.2			Clackamas	2010
PWS Tank Bottoms	1,2-Dichloroethane	C0D220565001	0.2	0.1	mg/L	U	0.2			Salt Lake City	2010
PWS Tank Bottoms	1,2-Dichloroethane	180-2334-1	0.2	0.1	mg/L	U	0.2			Boise	2011
PWS Tank Bottoms	1,2-Dichloroethane	180-2452-1	0.2	0.1	mg/L	U	0.2			Chandler	2011
PWS Tank Bottoms	1,2-Dichloroethane	180-2462-1	0.2	0.1	mg/L	U	0.2			Santa Ana	2011
PWS Tank Bottoms	1,2-Dichloroethane	180-10005-1	0.2	0.1	mg/L	U	0.2			Boise	2012
PWS Tank Bottoms	1,2-Dichloroethane	180-10295-1	0.2	0.1	mg/L	U	0.2			Salt Lake City	2012
PWS Tank Bottoms	1,2-Dichloroethane	180-6080-1	0.2	0.1	mg/L	U	0.2			Sioux Falls	2012
PWS Tank Bottoms	1,2-Dichloroethane	180-20714-1	0.2	0.1	mg/L	U	0.2			Salt Lake City	2013
PWS Tank Bottoms	1,2-Dichloroethane	180-21899-1	0.2	0.1	mg/L	U	0.2			Tulsa	2013
PWS Tank Bottoms	1,2-Dichloroethane	180-23127-1	0.2	0.1	mg/L	U	0.2			Wichita	2013
PWS Tank Bottoms	1,2-Dichloroethane	180-35833-1	0.2	0.1	mg/L	U	0.2			Dodge City	2014
PWS Tank Bottoms	1,2-Dichloroethane	180-32306-1	0.2	0.1	mg/L	U	0.2			Salt Lake City	2014
PWS Tank Bottoms	1,2-Dichloroethane	180-44034-1	0.2	0.1	mg/L	U	0.2			Boise	2015
PWS Tank Bottoms	1,2-Dichloroethane	180-43578-1	0.2	0.1	mg/L	U	0.2			Chandler	2015
PWS Tank Bottoms	1,2-Dichloroethane	180-43573-1	0.2	0.1	mg/L	U	0.2			Salt Lake City	2015
PWS Tank Bottoms	1,2-Dichloroethane	180-51960-1	0.2	0.1	mg/L	U	0.2			Farmington	2015
PWS Tank Bottoms	1,2-Dichloroethane	180-52526-1	0.2	0.1	mg/L	U H	0.2			Boise	2016
PWS Tank Bottoms	1,2-Dichloroethane	180-53484-1	0.2	0.1	mg/L	U	0.2			Chandler	2016
PWS Tank Bottoms	1,2-Dichloroethane	180-53880-1	0.2	0.1	mg/L	U	0.2			Omaha	2016
PWS Tank Bottoms	1,2-Dichloroethane	180-67590-2	0.2	0.1	mg/L	U	0.2	35	56	Boise	2017
PWS Tank Bottoms	1,2-Dichloroethane	180-65572-1	0.2	0.1	mg/L	U	0.2			Chandler	2017
PWS Tank Bottoms	1,2-Dichloroethane	180-68912-1	0.2	0.1	mg/L	U	0.2			Farmington	2017
PWS Tank Bottoms	1,2-Dichloroethane	180-65524-1	0.2	0.1	mg/L	U	0.2			Salt Lake City	2017
PWS Tank Bottoms	1,2-Dichloroethane	180-77050-1	0.2	0.1	mg/L	U	0.2			Boise	2018
PWS Tank Bottoms	1,2-Dichloroethane	180-80926-1	0.2	0.1	mg/L	U	0.2			Farmington	2018
PWS Tank Bottoms	1,2-Dichloroethane	180-82828-1	0.2	0.1	mg/L	U	0.2			Oklahoma City	2018
PWS Tank Bottoms	1,2-Dichloroethane	180-80846-1	0.2	0.1	mg/L	U	0.2			Sacramento	2018
PWS Tank Bottoms	1,2-Dichloroethane	180-77711-1	0.2	0.1	mg/L	U	0.2			Salt Lake City	2018
PWS Tank Bottoms	1,2-Dichloroethane	C8H250147001	0.25	0.125	mg/L	U	0.25			Blaine	2008
PWS Tank Bottoms	1,2-Dichloroethane	C8H250154001	0.25	0.125	mg/L	U	0.25			Blaine	2008

PWS Tank Bottoms	1,2-Dichloroethane	C8J030260001	0.25	0.125	mg/L	U	0.25	Eagan	2008
PWS Tank Bottoms	1,2-Dichloroethane	C8J030263001	0.25	0.125	mg/L	U	0.25	Eagan	2008
PWS Tank Bottoms	1,2-Dichloroethane	C9F060175001	0.25	0.125	mg/L	U	0.25	Wichita	2009
PWS Tank Bottoms	1,2-Dichloroethane	C0I090490001	0.25	0.125	mg/L	U	0.25	Santa Ana	2010
PWS Tank Bottoms	1,2-Dichloroethane	180-27070-1	0.25	0.125	mg/L	U	0.25	Sacramento	2013
PWS Tank Bottoms	1,2-Dichloroethane	180-32876-1	0.25	0.125	mg/L	U	0.25	Boise	2014
PWS Tank Bottoms	1,2-Dichloroethane	180-56702-1	0.25	0.125	mg/L	U	0.25	Farmington	2016
PWS Tank Bottoms	1,2-Dichloroethane	180-53843-1	0.25	0.125	mg/L	U	0.25	Salt Lake City	2016
PWS Tank Bottoms	1,2-Dichloroethane	180-74608-1	0.25	0.125	mg/L	U	0.25	Salisbury	2018
PWS Tank Bottoms	1,2-Dichloroethane	C0A200514001	0.5	0.25	mg/L	U	0.5	Sacramento	2010
PWS Tank Bottoms	1,2-Dichloroethane	180-604-11	0.5	0.25	mg/L	U	0.5	Salt Lake City	2011
PWS Tank Bottoms	1,4-Dichlorobenzene	180-2334-1	0.05	0.025	mg/L	U	0.05	Boise	2011
PWS Tank Bottoms	1,4-Dichlorobenzene	180-2452-1	0.05	0.025	mg/L	U	0.05	Chandler	2011
PWS Tank Bottoms	1,4-Dichlorobenzene	180-604-13	0.05	0.025	mg/L	U	0.05	Salt Lake City	2011
PWS Tank Bottoms	1,4-Dichlorobenzene	180-10005-1	0.05	0.025	mg/L	U	0.05	Boise	2012
PWS Tank Bottoms	1,4-Dichlorobenzene	180-10295-1	0.05	0.025	mg/L	U	0.05	Salt Lake City	2012
PWS Tank Bottoms	1,4-Dichlorobenzene	180-6080-1	0.05	0.025	mg/L	U	0.05	Sioux Falls	2012
PWS Tank Bottoms	1,4-Dichlorobenzene	180-20714-1	0.05	0.025	mg/L	U	0.05	Salt Lake City	2013
PWS Tank Bottoms	1,4-Dichlorobenzene	180-21899-1	0.05	0.025	mg/L	U	0.05	Tulsa	2013
PWS Tank Bottoms	1,4-Dichlorobenzene	C8E200313001	0.2	0.1	mg/L	U	0.2	Boise	2008
PWS Tank Bottoms	1,4-Dichlorobenzene	C8H200252001	0.2	0.1	mg/L	U	0.2	Dodge City	2008
PWS Tank Bottoms	1,4-Dichlorobenzene	C8F130326001	0.2	0.1	mg/L	U	0.2	Fargo	2008
PWS Tank Bottoms	1,4-Dichlorobenzene	C8D030320001	0.2	0.1	mg/L	U	0.2	Salt Lake City	2008
PWS Tank Bottoms	1,4-Dichlorobenzene	C8H080290001	0.2	0.1	mg/L	U	0.2	Wichita	2008
PWS Tank Bottoms	1,4-Dichlorobenzene	C9E090111001	0.2	0.1	mg/L	U	0.2	Boise	2009
PWS Tank Bottoms	1,4-Dichlorobenzene	C9E130321001	0.2	0.1	mg/L	U	0.2	Chandler	2009
PWS Tank Bottoms	1,4-Dichlorobenzene	C9K120427001	0.2	0.1	mg/L	U	0.2	Clackamas	2009
PWS Tank Bottoms	1,4-Dichlorobenzene	C9H040289003	0.2	0.1	mg/L	U	0.2	Dodge City	2009
PWS Tank Bottoms	1,4-Dichlorobenzene	C9E210290002	0.2	0.1	mg/L	U	0.2	Oklahoma City	2009
PWS Tank Bottoms	1,4-Dichlorobenzene	C9D230261001	0.2	0.1	mg/L	U	0.2	Salt Lake City	2009
PWS Tank Bottoms	1,4-Dichlorobenzene	C9I170278001	0.2	0.1	mg/L	U	0.2	Santa Ana	2009
PWS Tank Bottoms	1,4-Dichlorobenzene	C9H040288003	0.2	0.1	mg/L	U	0.2	Wichita	2009
PWS Tank Bottoms	1,4-Dichlorobenzene	C0H100558001	0.2	0.1	mg/L	U	0.2	Boise	2010
PWS Tank Bottoms	1,4-Dichlorobenzene	C0L080465001	0.2	0.1	mg/L	U	0.2	Clackamas	2010

PWS Tank Bottoms	1,4-Dichlorobenzene	C0D220565001	0.2	0.1	mg/L	U	0.2			Salt Lake City	2010
PWS Tank Bottoms	1,4-Dichlorobenzene	180-23127-1	0.2	0.1	mg/L	U	0.2			Wichita	2013
PWS Tank Bottoms	1,4-Dichlorobenzene	180-35833-1	0.2	0.1	mg/L	U	0.2			Dodge City	2014
PWS Tank Bottoms	1,4-Dichlorobenzene	180-32306-1	0.2	0.1	mg/L	U	0.2			Salt Lake City	2014
PWS Tank Bottoms	1,4-Dichlorobenzene	180-44034-1	0.2	0.1	mg/L	U	0.2			Boise	2015
PWS Tank Bottoms	1,4-Dichlorobenzene	180-43578-1	0.2	0.1	mg/L	U	0.2			Chandler	2015
PWS Tank Bottoms	1,4-Dichlorobenzene	180-43573-1	0.2	0.1	mg/L	U	0.2			Salt Lake City	2015
PWS Tank Bottoms	1,4-Dichlorobenzene	180-51960-1	0.2	0.1	mg/L	U	0.2			Farmington	2015
PWS Tank Bottoms	1,4-Dichlorobenzene	180-52526-1	0.2	0.1	mg/L	U H	0.2			Boise	2016
PWS Tank Bottoms	1,4-Dichlorobenzene	180-53484-1	0.2	0.1	mg/L	U	0.2			Chandler	2016
PWS Tank Bottoms	1,4-Dichlorobenzene	180-53880-1	0.2	0.1	mg/L	U	0.2			Omaha	2016
PWS Tank Bottoms	1,4-Dichlorobenzene	180-67590-2	0.2	0.1	mg/L	U	0.2	35	55	Boise	2017
PWS Tank Bottoms	1,4-Dichlorobenzene	180-65572-1	0.2	0.1	mg/L	U	0.2			Chandler	2017
PWS Tank Bottoms	1,4-Dichlorobenzene	180-68912-1	0.2	0.1	mg/L	U	0.2			Farmington	2017
PWS Tank Bottoms	1,4-Dichlorobenzene	180-65524-1	0.2	0.1	mg/L	U	0.2			Salt Lake City	2017
PWS Tank Bottoms	1,4-Dichlorobenzene	180-77050-1	0.2	0.1	mg/L	U	0.2			Boise	2018
PWS Tank Bottoms	1,4-Dichlorobenzene	180-80926-1	0.2	0.1	mg/L	U	0.2			Farmington	2018
PWS Tank Bottoms	1,4-Dichlorobenzene	180-82828-1	0.2	0.1	mg/L	U	0.2			Oklahoma City	2018
PWS Tank Bottoms	1,4-Dichlorobenzene	180-80846-1	0.2	0.1	mg/L	U	0.2			Sacramento	2018
PWS Tank Bottoms	1,4-Dichlorobenzene	180-77711-1	0.2	0.1	mg/L	U	0.2			Salt Lake City	2018
PWS Tank Bottoms	1,4-Dichlorobenzene	C9F060175001	0.25	0.125	mg/L	U	0.25			Wichita	2009
PWS Tank Bottoms	1,4-Dichlorobenzene	C0I090490001	0.25	0.125	mg/L	U	0.25			Santa Ana	2010
PWS Tank Bottoms	1,4-Dichlorobenzene	180-27070-1	0.25	0.125	mg/L	U	0.25			Sacramento	2013
PWS Tank Bottoms	1,4-Dichlorobenzene	180-32876-1	0.25	0.125	mg/L	U	0.25			Boise	2014
PWS Tank Bottoms	1,4-Dichlorobenzene	180-56702-1	0.25	0.125	mg/L	U	0.25			Farmington	2016
PWS Tank Bottoms	1,4-Dichlorobenzene	180-53843-1	0.25	0.125	mg/L	U	0.25			Salt Lake City	2016
PWS Tank Bottoms	1,4-Dichlorobenzene	180-74608-1	0.25	0.125	mg/L	U	0.25			Salisbury	2018
PWS Tank Bottoms	1,4-Dichlorobenzene	C0A200514001	0.5	0.25	mg/L	U	0.5			Sacramento	2010
PWS Tank Bottoms	1,4-Dichlorobenzene	C8J030260001	0.28	0.28	mg/L		0.25			Eagan	2008
PWS Tank Bottoms	1,4-Dichlorobenzene	C8H250147001	0.3	0.3	mg/L		0.25			Blaine	2008
PWS Tank Bottoms	1,4-Dichlorobenzene	C8H250154001	0.32	0.32	mg/L		0.25			Blaine	2008
PWS Tank Bottoms	1,4-Dichlorobenzene	C8J030263001	0.32	0.32	mg/L		0.25			Eagan	2008
PWS Tank Bottoms	2,4,5-Trichlorophenol	C8H200252001	0.05	0.025	mg/L	U	0.05			Dodge City	2008
PWS Tank Bottoms	2,4,5-Trichlorophenol	C8F130326001	0.05	0.025	mg/L	U	0.05			Fargo	2008

PWS Tank Bottoms	2,4,5-Trichlorophenol	C8D030320001	0.05	0.025	mg/L	U	0.05			Salt Lake City	2008
PWS Tank Bottoms	2,4,5-Trichlorophenol	C8H080290001	0.05	0.025	mg/L	U	0.05			Wichita	2008
PWS Tank Bottoms	2,4,5-Trichlorophenol	C9E090111001	0.05	0.025	mg/L	U	0.05			Boise	2009
PWS Tank Bottoms	2,4,5-Trichlorophenol	C9E130321001	0.05	0.025	mg/L	U	0.05			Chandler	2009
PWS Tank Bottoms	2,4,5-Trichlorophenol	C9H040289003	0.05	0.025	mg/L	U	0.05			Dodge City	2009
PWS Tank Bottoms	2,4,5-Trichlorophenol	C9E210290002	0.05	0.025	mg/L	U	0.05			Oklahoma City	2009
PWS Tank Bottoms	2,4,5-Trichlorophenol	C9D230261001	0.05	0.025	mg/L	U	0.05			Salt Lake City	2009
PWS Tank Bottoms	2,4,5-Trichlorophenol	C9H040288003	0.05	0.025	mg/L	U	0.05			Wichita	2009
PWS Tank Bottoms	2,4,5-Trichlorophenol	C0H100558001	0.05	0.025	mg/L	U	0.05			Boise	2010
PWS Tank Bottoms	2,4,5-Trichlorophenol	C0L080465001	0.05	0.025	mg/L	U	0.05			Clackamas	2010
PWS Tank Bottoms	2,4,5-Trichlorophenol	C0D220565001	0.05	0.025	mg/L	U	0.05			Salt Lake City	2010
PWS Tank Bottoms	2,4,5-Trichlorophenol	180-2334-1	0.05	0.025	mg/L	U	0.05			Boise	2011
PWS Tank Bottoms	2,4,5-Trichlorophenol	180-2452-1	0.05	0.025	mg/L	U	0.05			Chandler	2011
PWS Tank Bottoms	2,4,5-Trichlorophenol	180-604-13	0.05	0.025	mg/L	U	0.05			Salt Lake City	2011
PWS Tank Bottoms	2,4,5-Trichlorophenol	180-10005-1	0.05	0.025	mg/L	U	0.05			Boise	2012
PWS Tank Bottoms	2,4,5-Trichlorophenol	180-10295-1	0.05	0.025	mg/L	U	0.05			Salt Lake City	2012
PWS Tank Bottoms	2,4,5-Trichlorophenol	180-6080-1	0.05	0.025	mg/L	U	0.05			Sioux Falls	2012
PWS Tank Bottoms	2,4,5-Trichlorophenol	180-20714-1	0.05	0.025	mg/L	U *	0.05			Salt Lake City	2013
PWS Tank Bottoms	2,4,5-Trichlorophenol	180-21899-1	0.05	0.025	mg/L	U	0.05			Tulsa	2013
PWS Tank Bottoms	2,4,5-Trichlorophenol	180-23127-1	0.05	0.025	mg/L	U	0.05			Wichita	2013
PWS Tank Bottoms	2,4,5-Trichlorophenol	180-35833-1	0.05	0.025	mg/L	U	0.05			Dodge City	2014
PWS Tank Bottoms	2,4,5-Trichlorophenol	180-32306-1	0.05	0.025	mg/L	U	0.05			Salt Lake City	2014
PWS Tank Bottoms	2,4,5-Trichlorophenol	180-44034-1	0.05	0.025	mg/L	U	0.05			Boise	2015
PWS Tank Bottoms	2,4,5-Trichlorophenol	180-43578-1	0.05	0.025	mg/L	U	0.05			Chandler	2015
PWS Tank Bottoms	2,4,5-Trichlorophenol	180-43573-1	0.05	0.025	mg/L	U	0.05			Salt Lake City	2015
PWS Tank Bottoms	2,4,5-Trichlorophenol	180-52526-1	0.05	0.025	mg/L	U H	0.05			Boise	2016
PWS Tank Bottoms	2,4,5-Trichlorophenol	180-53484-1	0.05	0.025	mg/L	U	0.05			Chandler	2016
PWS Tank Bottoms	2,4,5-Trichlorophenol	180-53880-1	0.05	0.025	mg/L	U	0.05			Omaha	2016
PWS Tank Bottoms	2,4,5-Trichlorophenol	180-67590-2	0.05	0.025	mg/L	U	0.05			Boise	2017
PWS Tank Bottoms	2,4,5-Trichlorophenol	180-65572-1	0.05	0.025	mg/L	U	0.05	32	51	Chandler	2017
PWS Tank Bottoms	2,4,5-Trichlorophenol	180-68912-1	0.05	0.025	mg/L	U	0.05			Farmington	2017
PWS Tank Bottoms	2,4,5-Trichlorophenol	180-65524-1	0.05	0.025	mg/L	U	0.05			Salt Lake City	2017
PWS Tank Bottoms	2,4,5-Trichlorophenol	180-77050-1	0.05	0.025	mg/L	U	0.05			Boise	2018
PWS Tank Bottoms	2,4,5-Trichlorophenol	180-80926-1	0.05	0.025	mg/L	U	0.05			Farmington	2018

PWS Tank Bottoms	2,4,5-Trichlorophenol	180-82828-1	0.05	0.025	mg/L	U	0.05	Oklahoma City	2018
PWS Tank Bottoms	2,4,5-Trichlorophenol	180-80846-1	0.05	0.025	mg/L	U	0.05	Sacramento	2018
PWS Tank Bottoms	2,4,5-Trichlorophenol	180-77711-1	0.05	0.025	mg/L	U	0.05	Salt Lake City	2018
PWS Tank Bottoms	2,4,5-Trichlorophenol	C9K120427001	0.1	0.05	mg/L	U	0.1	Clackamas	2009
PWS Tank Bottoms	2,4,5-Trichlorophenol	180-51960-2	0.13	0.065	mg/L	U	0.13	Farmington	2015
PWS Tank Bottoms	2,4,5-Trichlorophenol	180-56702-1	0.13	0.065	mg/L	U	0.13	Farmington	2016
PWS Tank Bottoms	2,4,5-Trichlorophenol	180-53843-1	0.13	0.065	mg/L	U	0.13	Salt Lake City	2016
PWS Tank Bottoms	2,4,5-Trichlorophenol	180-74608-1	0.13	0.065	mg/L	U *	0.13	Salisbury	2018
PWS Tank Bottoms	2,4,5-Trichlorophenol	180-32876-1	0.24	0.24	mg/L	p	0.13	Boise	2014
PWS Tank Bottoms	2,4,5-Trichlorophenol	C8E200313001	0.75	0.375	mg/L	U	0.75	Boise	2008
PWS Tank Bottoms	2,4,5-Trichlorophenol	C8H250147001	400	200	mg/L	U	400	Blaine	2008
PWS Tank Bottoms	2,4,5-Trichlorophenol	C8H250154001	400	200	mg/L	U	400	Blaine	2008
PWS Tank Bottoms	2,4,5-Trichlorophenol	C8J030260001	400	200	mg/L	U	400	Eagan	2008
PWS Tank Bottoms	2,4,5-Trichlorophenol	C8J030263001	400	200	mg/L	U	400	Eagan	2008
PWS Tank Bottoms	2,4,5-Trichlorophenol	C9F060175001	400	200	mg/L	U	400	Wichita	2009
PWS Tank Bottoms	2,4,6-Trichlorophenol	C8H200252001	0.05	0.025	mg/L	U	0.05	Dodge City	2008
PWS Tank Bottoms	2,4,6-Trichlorophenol	C8F130326001	0.05	0.025	mg/L	U	0.05	Fargo	2008
PWS Tank Bottoms	2,4,6-Trichlorophenol	C8D030320001	0.05	0.025	mg/L	U	0.05	Salt Lake City	2008
PWS Tank Bottoms	2,4,6-Trichlorophenol	C8H080290001	0.05	0.025	mg/L	U	0.05	Wichita	2008
PWS Tank Bottoms	2,4,6-Trichlorophenol	C9E090111001	0.05	0.025	mg/L	U	0.05	Boise	2009
PWS Tank Bottoms	2,4,6-Trichlorophenol	C9E130321001	0.05	0.025	mg/L	U	0.05	Chandler	2009
PWS Tank Bottoms	2,4,6-Trichlorophenol	C9H040289003	0.05	0.025	mg/L	U	0.05	Dodge City	2009
PWS Tank Bottoms	2,4,6-Trichlorophenol	C9E210290002	0.05	0.025	mg/L	U	0.05	Oklahoma City	2009
PWS Tank Bottoms	2,4,6-Trichlorophenol	C9D230261001	0.05	0.025	mg/L	U	0.05	Salt Lake City	2009
PWS Tank Bottoms	2,4,6-Trichlorophenol	C9H040288003	0.05	0.025	mg/L	U	0.05	Wichita	2009
PWS Tank Bottoms	2,4,6-Trichlorophenol	C0H100558001	0.05	0.025	mg/L	U	0.05	Boise	2010
PWS Tank Bottoms	2,4,6-Trichlorophenol	C0L080465001	0.05	0.025	mg/L	U	0.05	Clackamas	2010
PWS Tank Bottoms	2,4,6-Trichlorophenol	C0D220565001	0.05	0.025	mg/L	U	0.05	Salt Lake City	2010
PWS Tank Bottoms	2,4,6-Trichlorophenol	180-2334-1	0.05	0.025	mg/L	U	0.05	Boise	2011
PWS Tank Bottoms	2,4,6-Trichlorophenol	180-2452-1	0.05	0.025	mg/L	U	0.05	Chandler	2011
PWS Tank Bottoms	2,4,6-Trichlorophenol	180-604-13	0.05	0.025	mg/L	U	0.05	Salt Lake City	2011
PWS Tank Bottoms	2,4,6-Trichlorophenol	180-10005-1	0.05	0.025	mg/L	U	0.05	Boise	2012
PWS Tank Bottoms	2,4,6-Trichlorophenol	180-10295-1	0.05	0.025	mg/L	U	0.05	Salt Lake City	2012
PWS Tank Bottoms	2,4,6-Trichlorophenol	180-6080-1	0.05	0.025	mg/L	U	0.05	Sioux Falls	2012

PWS Tank Bottoms	2,4,6-Trichlorophenol	180-20714-1	0.05	0.025	mg/L	U *	0.05			Salt Lake City	2013
PWS Tank Bottoms	2,4,6-Trichlorophenol	180-21899-1	0.05	0.025	mg/L	U	0.05			Tulsa	2013
PWS Tank Bottoms	2,4,6-Trichlorophenol	180-23127-1	0.05	0.025	mg/L	U	0.05			Wichita	2013
PWS Tank Bottoms	2,4,6-Trichlorophenol	180-35833-1	0.05	0.025	mg/L	U	0.05			Dodge City	2014
PWS Tank Bottoms	2,4,6-Trichlorophenol	180-32306-1	0.05	0.025	mg/L	U	0.05			Salt Lake City	2014
PWS Tank Bottoms	2,4,6-Trichlorophenol	180-44034-1	0.05	0.025	mg/L	U	0.05			Boise	2015
PWS Tank Bottoms	2,4,6-Trichlorophenol	180-43578-1	0.05	0.025	mg/L	U	0.05			Chandler	2015
PWS Tank Bottoms	2,4,6-Trichlorophenol	180-43573-1	0.05	0.025	mg/L	U	0.05			Salt Lake City	2015
PWS Tank Bottoms	2,4,6-Trichlorophenol	180-52526-1	0.05	0.025	mg/L	U H	0.05			Boise	2016
PWS Tank Bottoms	2,4,6-Trichlorophenol	180-53484-1	0.05	0.025	mg/L	U	0.05			Chandler	2016
PWS Tank Bottoms	2,4,6-Trichlorophenol	180-53880-1	0.05	0.025	mg/L	U	0.05			Omaha	2016
PWS Tank Bottoms	2,4,6-Trichlorophenol	180-67590-2	0.05	0.025	mg/L	U	0.05			Boise	2017
PWS Tank Bottoms	2,4,6-Trichlorophenol	180-65572-1	0.05	0.025	mg/L	U	0.05	32	51	Chandler	2017
PWS Tank Bottoms	2,4,6-Trichlorophenol	180-68912-1	0.05	0.025	mg/L	U	0.05			Farmington	2017
PWS Tank Bottoms	2,4,6-Trichlorophenol	180-65524-1	0.05	0.025	mg/L	U	0.05			Salt Lake City	2017
PWS Tank Bottoms	2,4,6-Trichlorophenol	180-77050-1	0.05	0.025	mg/L	U	0.05			Boise	2018
PWS Tank Bottoms	2,4,6-Trichlorophenol	180-80926-1	0.05	0.025	mg/L	U	0.05			Farmington	2018
PWS Tank Bottoms	2,4,6-Trichlorophenol	180-82828-1	0.05	0.025	mg/L	U	0.05			Oklahoma City	2018
PWS Tank Bottoms	2,4,6-Trichlorophenol	180-80846-1	0.05	0.025	mg/L	U	0.05			Sacramento	2018
PWS Tank Bottoms	2,4,6-Trichlorophenol	180-77711-1	0.05	0.025	mg/L	U	0.05			Salt Lake City	2018
PWS Tank Bottoms	2,4,6-Trichlorophenol	C9K120427001	0.1	0.05	mg/L	U	0.1			Clackamas	2009
PWS Tank Bottoms	2,4,6-Trichlorophenol	180-32876-1	0.13	0.065	mg/L	U	0.13			Boise	2014
PWS Tank Bottoms	2,4,6-Trichlorophenol	180-51960-2	0.13	0.065	mg/L	U	0.13			Farmington	2015
PWS Tank Bottoms	2,4,6-Trichlorophenol	180-56702-1	0.13	0.065	mg/L	U	0.13			Farmington	2016
PWS Tank Bottoms	2,4,6-Trichlorophenol	180-53843-1	0.13	0.065	mg/L	U	0.13			Salt Lake City	2016
PWS Tank Bottoms	2,4,6-Trichlorophenol	180-74608-1	0.13	0.065	mg/L	U *	0.13			Salisbury	2018
PWS Tank Bottoms	2,4,6-Trichlorophenol	C8E200313001	0.75	0.375	mg/L	U	0.75			Boise	2008
PWS Tank Bottoms	2,4,6-Trichlorophenol	C8H250147001	2	1	mg/L	U	2			Blaine	2008
PWS Tank Bottoms	2,4,6-Trichlorophenol	C8H250154001	2	1	mg/L	U	2			Blaine	2008
PWS Tank Bottoms	2,4,6-Trichlorophenol	C8J030260001	2	1	mg/L	U	2			Eagan	2008
PWS Tank Bottoms	2,4,6-Trichlorophenol	C8J030263001	2	1	mg/L	U	2			Eagan	2008
PWS Tank Bottoms	2,4,6-Trichlorophenol	C9F060175001	2	1	mg/L	U	2			Wichita	2009
PWS Tank Bottoms	2,4-Dinitrotoluene	C8H200252001	0.05	0.025	mg/L	U	0.05			Dodge City	2008
PWS Tank Bottoms	2,4-Dinitrotoluene	C8F130326001	0.05	0.025	mg/L	U	0.05			Fargo	2008

PWS Tank Bottoms	2,4-Dinitrotoluene	C8D030320001	0.05	0.025	mg/L	U	0.05			Salt Lake City	2008
PWS Tank Bottoms	2,4-Dinitrotoluene	C8H080290001	0.05	0.025	mg/L	U	0.05			Wichita	2008
PWS Tank Bottoms	2,4-Dinitrotoluene	C9E090111001	0.05	0.025	mg/L	U	0.05			Boise	2009
PWS Tank Bottoms	2,4-Dinitrotoluene	C9E130321001	0.05	0.025	mg/L	U	0.05			Chandler	2009
PWS Tank Bottoms	2,4-Dinitrotoluene	C9H040289003	0.05	0.025	mg/L	U	0.05			Dodge City	2009
PWS Tank Bottoms	2,4-Dinitrotoluene	C9E210290002	0.05	0.025	mg/L	U	0.05			Oklahoma City	2009
PWS Tank Bottoms	2,4-Dinitrotoluene	C9D230261001	0.05	0.025	mg/L	U	0.05			Salt Lake City	2009
PWS Tank Bottoms	2,4-Dinitrotoluene	C9H040288003	0.05	0.025	mg/L	U	0.05			Wichita	2009
PWS Tank Bottoms	2,4-Dinitrotoluene	C0H100558001	0.05	0.025	mg/L	U	0.05			Boise	2010
PWS Tank Bottoms	2,4-Dinitrotoluene	C0L080465001	0.05	0.025	mg/L	U	0.05			Clackamas	2010
PWS Tank Bottoms	2,4-Dinitrotoluene	C0D220565001	0.05	0.025	mg/L	U	0.05			Salt Lake City	2010
PWS Tank Bottoms	2,4-Dinitrotoluene	180-2334-1	0.05	0.025	mg/L	U	0.05			Boise	2011
PWS Tank Bottoms	2,4-Dinitrotoluene	180-2452-1	0.05	0.025	mg/L	U	0.05			Chandler	2011
PWS Tank Bottoms	2,4-Dinitrotoluene	180-604-13	0.05	0.025	mg/L	U	0.05			Salt Lake City	2011
PWS Tank Bottoms	2,4-Dinitrotoluene	180-10005-1	0.05	0.025	mg/L	U	0.05			Boise	2012
PWS Tank Bottoms	2,4-Dinitrotoluene	180-10295-1	0.05	0.025	mg/L	U	0.05			Salt Lake City	2012
PWS Tank Bottoms	2,4-Dinitrotoluene	180-6080-1	0.05	0.025	mg/L	U	0.05			Sioux Falls	2012
PWS Tank Bottoms	2,4-Dinitrotoluene	180-20714-1	0.05	0.025	mg/L	U	0.05			Salt Lake City	2013
PWS Tank Bottoms	2,4-Dinitrotoluene	180-21899-1	0.05	0.025	mg/L	U	0.05			Tulsa	2013
PWS Tank Bottoms	2,4-Dinitrotoluene	180-23127-1	0.05	0.025	mg/L	U	0.05			Wichita	2013
PWS Tank Bottoms	2,4-Dinitrotoluene	180-35833-1	0.05	0.025	mg/L	U	0.05			Dodge City	2014
PWS Tank Bottoms	2,4-Dinitrotoluene	180-32306-1	0.05	0.025	mg/L	U	0.05			Salt Lake City	2014
PWS Tank Bottoms	2,4-Dinitrotoluene	180-44034-1	0.05	0.025	mg/L	U	0.05			Boise	2015
PWS Tank Bottoms	2,4-Dinitrotoluene	180-43578-1	0.05	0.025	mg/L	U	0.05			Chandler	2015
PWS Tank Bottoms	2,4-Dinitrotoluene	180-43573-1	0.05	0.025	mg/L	U	0.05			Salt Lake City	2015
PWS Tank Bottoms	2,4-Dinitrotoluene	180-52526-1	0.05	0.025	mg/L	U H	0.05			Boise	2016
PWS Tank Bottoms	2,4-Dinitrotoluene	180-53484-1	0.05	0.025	mg/L	U	0.05			Chandler	2016
PWS Tank Bottoms	2,4-Dinitrotoluene	180-53880-1	0.05	0.025	mg/L	U	0.05			Omaha	2016
PWS Tank Bottoms	2,4-Dinitrotoluene	180-67590-2	0.05	0.025	mg/L	U	0.05			Boise	2017
PWS Tank Bottoms	2,4-Dinitrotoluene	180-65572-1	0.05	0.025	mg/L	U	0.05	32	51	Chandler	2017
PWS Tank Bottoms	2,4-Dinitrotoluene	180-68912-1	0.05	0.025	mg/L	U	0.05			Farmington	2017
PWS Tank Bottoms	2,4-Dinitrotoluene	180-65524-1	0.05	0.025	mg/L	U	0.05			Salt Lake City	2017
PWS Tank Bottoms	2,4-Dinitrotoluene	180-77050-1	0.05	0.025	mg/L	U	0.05			Boise	2018
PWS Tank Bottoms	2,4-Dinitrotoluene	180-80926-1	0.05	0.025	mg/L	U	0.05			Farmington	2018

PWS Tank Bottoms	2,4-Dinitrotoluene	180-82828-1	0.05	0.025	mg/L	U	0.05	Oklahoma City	2018
PWS Tank Bottoms	2,4-Dinitrotoluene	180-80846-1	0.05	0.025	mg/L	U	0.05	Sacramento	2018
PWS Tank Bottoms	2,4-Dinitrotoluene	180-77711-1	0.05	0.025	mg/L	U	0.05	Salt Lake City	2018
PWS Tank Bottoms	2,4-Dinitrotoluene	C9K120427001	0.1	0.05	mg/L	U	0.1	Clackamas	2009
PWS Tank Bottoms	2,4-Dinitrotoluene	C8J030260001	0.13	0.065	mg/L	U	0.13	Eagan	2008
PWS Tank Bottoms	2,4-Dinitrotoluene	C8J030263001	0.13	0.065	mg/L	U	0.13	Eagan	2008
PWS Tank Bottoms	2,4-Dinitrotoluene	C9F060175001	0.13	0.065	mg/L	U	0.13	Wichita	2009
PWS Tank Bottoms	2,4-Dinitrotoluene	180-51960-2	0.13	0.065	mg/L	U	0.13	Farmington	2015
PWS Tank Bottoms	2,4-Dinitrotoluene	180-56702-1	0.13	0.065	mg/L	U	0.13	Farmington	2016
PWS Tank Bottoms	2,4-Dinitrotoluene	180-53843-1	0.13	0.065	mg/L	U	0.13	Salt Lake City	2016
PWS Tank Bottoms	2,4-Dinitrotoluene	180-74608-1	0.13	0.065	mg/L	U	0.13	Salisbury	2018
PWS Tank Bottoms	2,4-Dinitrotoluene	180-32876-1	0.25	0.25	mg/L		0.13	Boise	2014
PWS Tank Bottoms	2,4-Dinitrotoluene	C8E200313001	0.75	0.375	mg/L	U	0.75	Boise	2008
PWS Tank Bottoms	2,4-Dinitrotoluene	C8H250154001	0.59	0.59	mg/L		0.13	Blaine	2008
PWS Tank Bottoms	2,4-Dinitrotoluene	C8H250147001	0.63	0.63	mg/L		0.13	Blaine	2008
PWS Tank Bottoms	2-Butanone (MEK)	180-77050-1	0.2	0.1	mg/L	U	0.2	Boise	2018
PWS Tank Bottoms	2-Butanone (MEK)	180-80926-1	0.2	0.1	mg/L	U	0.2	Farmington	2018
PWS Tank Bottoms	2-Butanone (MEK)	180-82828-1	0.2	0.1	mg/L	U	0.2	Oklahoma City	2018
PWS Tank Bottoms	2-Butanone (MEK)	180-80846-1	0.2	0.1	mg/L	U	0.2	Sacramento	2018
PWS Tank Bottoms	2-Butanone (MEK)	180-77711-1	0.2	0.1	mg/L	U	0.2	Salt Lake City	2018
PWS Tank Bottoms	2-Butanone (MEK)	C8E200313001	0.2	0.1	mg/L	U	0.2	Boise	2008
PWS Tank Bottoms	2-Butanone (MEK)	C8F130326001	0.2	0.1	mg/L	U	0.2	Fargo	2008
PWS Tank Bottoms	2-Butanone (MEK)	C9E130321001	0.2	0.1	mg/L	U	0.2	Chandler	2009
PWS Tank Bottoms	2-Butanone (MEK)	C9K120427001	0.2	0.1	mg/L	U	0.2	Clackamas	2009
PWS Tank Bottoms	2-Butanone (MEK)	C9H040288003	0.2	0.1	mg/L	U	0.2	Wichita	2009
PWS Tank Bottoms	2-Butanone (MEK)	C0H100558001	0.2	0.1	mg/L	U	0.2	Boise	2010
PWS Tank Bottoms	2-Butanone (MEK)	C0D220565001	0.2	0.1	mg/L	U	0.2	Salt Lake City	2010
PWS Tank Bottoms	2-Butanone (MEK)	180-10005-1	0.2	0.1	mg/L	U	0.2	Boise	2012
PWS Tank Bottoms	2-Butanone (MEK)	180-6080-1	0.2	0.1	mg/L	U	0.2	Sioux Falls	2012
PWS Tank Bottoms	2-Butanone (MEK)	180-20714-1	0.2	0.1	mg/L	U	0.2	Salt Lake City	2013
PWS Tank Bottoms	2-Butanone (MEK)	180-23127-1	0.2	0.1	mg/L	U	0.2	Wichita	2013
PWS Tank Bottoms	2-Butanone (MEK)	180-35833-1	0.2	0.1	mg/L	U	0.2	Dodge City	2014
PWS Tank Bottoms	2-Butanone (MEK)	180-51960-1	0.2	0.1	mg/L	U	0.2	Farmington	2015
PWS Tank Bottoms	2-Butanone (MEK)	180-44034-1	0.2	0.1	mg/L	U	0.2	Boise	2015

PWS Tank Bottoms	2-Butanone (MEK)	180-43578-1	0.2	0.1	mg/L	U	0.2			Chandler	2015
PWS Tank Bottoms	2-Butanone (MEK)	180-43573-1	0.2	0.1	mg/L	U	0.2			Salt Lake City	2015
PWS Tank Bottoms	2-Butanone (MEK)	180-52526-1	0.2	0.1	mg/L	U H	0.2			Boise	2016
PWS Tank Bottoms	2-Butanone (MEK)	180-53484-1	0.2	0.1	mg/L	U	0.2			Chandler	2016
PWS Tank Bottoms	2-Butanone (MEK)	180-67590-2	0.2	0.1	mg/L	U	0.2			Boise	2017
PWS Tank Bottoms	2-Butanone (MEK)	180-65572-1	0.2	0.1	mg/L	U	0.2			Chandler	2017
PWS Tank Bottoms	2-Butanone (MEK)	180-65524-1	0.12	0.12	mg/L	J	0.2			Salt Lake City	2017
PWS Tank Bottoms	2-Butanone (MEK)	180-74608-1	0.25	0.125	mg/L	U	0.25			Salisbury	2018
PWS Tank Bottoms	2-Butanone (MEK)	180-10295-1	0.13	0.13	mg/L	J	0.2			Salt Lake City	2012
PWS Tank Bottoms	2-Butanone (MEK)	180-68912-1	0.17	0.17	mg/L	J	0.2			Farmington	2017
PWS Tank Bottoms	2-Butanone (MEK)	180-53880-1	0.19	0.19	mg/L	J	0.2			Omaha	2016
PWS Tank Bottoms	2-Butanone (MEK)	C9H040289003	0.2	0.2	mg/L		0.2			Dodge City	2009
PWS Tank Bottoms	2-Butanone (MEK)	C9E210290002	0.21	0.21	mg/L		0.2			Oklahoma City	2009
PWS Tank Bottoms	2-Butanone (MEK)	C8H200252001	0.23	0.23	mg/L		0.2			Dodge City	2008
PWS Tank Bottoms	2-Butanone (MEK)	C0L080465001	0.27	0.27	mg/L		0.2			Clackamas	2010
PWS Tank Bottoms	2-Butanone (MEK)	C9D230261001	0.37	0.37	mg/L		0.2	35	55	Salt Lake City	2009
PWS Tank Bottoms	2-Butanone (MEK)	180-2462-1	0.38	0.38	mg/L		0.2			Santa Ana	2011
PWS Tank Bottoms	2-Butanone (MEK)	C8D030320001	0.45	0.45	mg/L		0.2			Salt Lake City	2008
PWS Tank Bottoms	2-Butanone (MEK)	180-2334-1	0.45	0.45	mg/L	H	0.2			Boise	2011
PWS Tank Bottoms	2-Butanone (MEK)	180-32306-1	0.45	0.45	mg/L		0.2			Salt Lake City	2014
PWS Tank Bottoms	2-Butanone (MEK)	C9E090111001	0.5	0.5	mg/L		0.2			Boise	2009
PWS Tank Bottoms	2-Butanone (MEK)	180-2452-1	0.71	0.71	mg/L		0.2			Chandler	2011
PWS Tank Bottoms	2-Butanone (MEK)	180-21899-1	1.1	1.1	mg/L		0.2			Tulsa	2013
PWS Tank Bottoms	2-Butanone (MEK)	C9I170278001	1.4	1.4	mg/L		0.2			Santa Ana	2009
PWS Tank Bottoms	2-Butanone (MEK)	C8J030260001	2.4	2.4	mg/L		0.25			Eagan	2008
PWS Tank Bottoms	2-Butanone (MEK)	C8H250147001	2.5	2.5	mg/L		0.25			Blaine	2008
PWS Tank Bottoms	2-Butanone (MEK)	C8H250154001	2.6	2.6	mg/L		0.25			Blaine	2008
PWS Tank Bottoms	2-Butanone (MEK)	180-53843-1	2.6	2.6	mg/L		0.25			Salt Lake City	2016
PWS Tank Bottoms	2-Butanone (MEK)	C8J030263001	3.3	3.3	mg/L		0.25			Eagan	2008
PWS Tank Bottoms	2-Butanone (MEK)	C9F060175001	3.4	3.4	mg/L		0.25			Wichita	2009
PWS Tank Bottoms	2-Butanone (MEK)	C0I090490001	3.5	3.5	mg/L		0.25			Santa Ana	2010
PWS Tank Bottoms	2-Butanone (MEK)	180-56702-1	4	4	mg/L		0.25			Farmington	2016
PWS Tank Bottoms	2-Butanone (MEK)	180-32876-1	5.7	5.7	mg/L		0.25			Boise	2014
PWS Tank Bottoms	2-Butanone (MEK)	180-27070-1	6.1	6.1	mg/L		0.25			Sacramento	2013

PWS Tank Bottoms	2-Butanone (MEK)	180-604-11	8.1	8.1	mg/L	H	0.5			Salt Lake City	2011
PWS Tank Bottoms	2-Butanone (MEK)	C0A200514001	21	21	mg/L		0.5			Sacramento	2010
PWS Tank Bottoms	2-Methylphenol	180-20714-1	0.0039	0.0039	mg/L	J	0.05			Salt Lake City	2013
PWS Tank Bottoms	2-Methylphenol	180-604-13	0.012	0.012	mg/L	J H	0.05			Salt Lake City	2011
PWS Tank Bottoms	2-Methylphenol	C8H200252001	0.05	0.025	mg/L	U	0.05			Dodge City	2008
PWS Tank Bottoms	2-Methylphenol	C8F130326001	0.05	0.025	mg/L	U	0.05			Fargo	2008
PWS Tank Bottoms	2-Methylphenol	C8D030320001	0.05	0.025	mg/L	U	0.05			Salt Lake City	2008
PWS Tank Bottoms	2-Methylphenol	C8H080290001	0.05	0.025	mg/L	U	0.05			Wichita	2008
PWS Tank Bottoms	2-Methylphenol	C9E090111001	0.05	0.025	mg/L	U	0.05			Boise	2009
PWS Tank Bottoms	2-Methylphenol	C9E130321001	0.05	0.025	mg/L	U	0.05			Chandler	2009
PWS Tank Bottoms	2-Methylphenol	C9H040289003	0.05	0.025	mg/L	U	0.05			Dodge City	2009
PWS Tank Bottoms	2-Methylphenol	C9E210290002	0.05	0.025	mg/L	U	0.05			Oklahoma City	2009
PWS Tank Bottoms	2-Methylphenol	C9D230261001	0.05	0.025	mg/L	U	0.05			Salt Lake City	2009
PWS Tank Bottoms	2-Methylphenol	C9H040288003	0.05	0.025	mg/L	U	0.05			Wichita	2009
PWS Tank Bottoms	2-Methylphenol	C0H100558001	0.05	0.025	mg/L	U	0.05			Boise	2010
PWS Tank Bottoms	2-Methylphenol	C0L080465001	0.05	0.025	mg/L	U	0.05			Clackamas	2010
PWS Tank Bottoms	2-Methylphenol	C0D220565001	0.05	0.025	mg/L	U	0.05			Salt Lake City	2010
PWS Tank Bottoms	2-Methylphenol	180-2334-1	0.05	0.025	mg/L	U	0.05			Boise	2011
PWS Tank Bottoms	2-Methylphenol	180-2452-1	0.05	0.025	mg/L	U	0.05			Chandler	2011
PWS Tank Bottoms	2-Methylphenol	180-10005-1	0.05	0.025	mg/L	U	0.05			Boise	2012
PWS Tank Bottoms	2-Methylphenol	180-10295-1	0.05	0.025	mg/L	U	0.05			Salt Lake City	2012
PWS Tank Bottoms	2-Methylphenol	180-6080-1	0.05	0.025	mg/L	U	0.05			Sioux Falls	2012
PWS Tank Bottoms	2-Methylphenol	180-21899-1	0.05	0.025	mg/L	U	0.05			Tulsa	2013
PWS Tank Bottoms	2-Methylphenol	180-23127-1	0.05	0.025	mg/L	U	0.05			Wichita	2013
PWS Tank Bottoms	2-Methylphenol	180-35833-1	0.05	0.025	mg/L	U	0.05			Dodge City	2014
PWS Tank Bottoms	2-Methylphenol	180-32306-1	0.05	0.025	mg/L	U	0.05			Salt Lake City	2014
PWS Tank Bottoms	2-Methylphenol	180-44034-1	0.05	0.025	mg/L	U	0.05			Boise	2015
PWS Tank Bottoms	2-Methylphenol	180-43578-1	0.05	0.025	mg/L	U	0.05			Chandler	2015
PWS Tank Bottoms	2-Methylphenol	180-43573-1	0.05	0.025	mg/L	U	0.05			Salt Lake City	2015
PWS Tank Bottoms	2-Methylphenol	180-52526-1	0.05	0.025	mg/L	U H	0.05			Boise	2016
PWS Tank Bottoms	2-Methylphenol	180-53484-1	0.05	0.025	mg/L	U	0.05			Chandler	2016
PWS Tank Bottoms	2-Methylphenol	180-53880-1	0.05	0.025	mg/L	U	0.05			Omaha	2016
PWS Tank Bottoms	2-Methylphenol	180-67590-2	0.05	0.025	mg/L	U	0.05			Boise	2017
PWS Tank Bottoms	2-Methylphenol	180-65572-1	0.05	0.025	mg/L	U	0.05	32	51	Chandler	2017

PWS Tank Bottoms	2-Methylphenol	180-68912-1	0.05	0.025	mg/L	U	0.05	Farmington	2017
PWS Tank Bottoms	2-Methylphenol	180-65524-1	0.05	0.025	mg/L	U	0.05	Salt Lake City	2017
PWS Tank Bottoms	2-Methylphenol	180-77050-1	0.05	0.025	mg/L	U	0.05	Boise	2018
PWS Tank Bottoms	2-Methylphenol	180-80926-1	0.05	0.025	mg/L	U	0.05	Farmington	2018
PWS Tank Bottoms	2-Methylphenol	180-82828-1	0.05	0.025	mg/L	U	0.05	Oklahoma City	2018
PWS Tank Bottoms	2-Methylphenol	180-80846-1	0.05	0.025	mg/L	U	0.05	Sacramento	2018
PWS Tank Bottoms	2-Methylphenol	180-77711-1	0.05	0.025	mg/L	U	0.05	Salt Lake City	2018
PWS Tank Bottoms	2-Methylphenol	C8J030260001	0.1	0.05	mg/L	U	0.1	Eagan	2008
PWS Tank Bottoms	2-Methylphenol	C8J030263001	0.1	0.05	mg/L	U	0.1	Eagan	2008
PWS Tank Bottoms	2-Methylphenol	C9K120427001	0.1	0.05	mg/L	U	0.1	Clackamas	2009
PWS Tank Bottoms	2-Methylphenol	C9F060175001	0.1	0.05	mg/L	U	0.1	Wichita	2009
PWS Tank Bottoms	2-Methylphenol	C8E200313001	0.75	0.375	mg/L	U	0.75	Boise	2008
PWS Tank Bottoms	2-Methylphenol	C8H250147001	1	0.5	mg/L	U	1	Blaine	2008
PWS Tank Bottoms	2-Methylphenol	C8H250154001	1	0.5	mg/L	U	1	Blaine	2008
PWS Tank Bottoms	2-Methylphenol	180-32876-1	1	0.5	mg/L	U	1	Boise	2014
PWS Tank Bottoms	2-Methylphenol	180-51960-2	1	0.5	mg/L	U	1	Farmington	2015
PWS Tank Bottoms	2-Methylphenol	180-56702-1	1	0.5	mg/L	U	1	Farmington	2016
PWS Tank Bottoms	2-Methylphenol	180-53843-1	1	0.5	mg/L	U	1	Salt Lake City	2016
PWS Tank Bottoms	2-Methylphenol	180-74608-1	1	0.5	mg/L	U	1	Salisbury	2018
PWS Tank Bottoms	Arsenic	180-23127-1	0.003	0.003	mg/L	J	0.05	Wichita	2013
PWS Tank Bottoms	Arsenic	180-2452-1	0.0071	0.0071	mg/L	J	0.05	Chandler	2011
PWS Tank Bottoms	Arsenic	180-10005-1	0.0086	0.0086	mg/L	J	0.05	Boise	2012
PWS Tank Bottoms	Arsenic	180-20714-1	0.0087	0.0087	mg/L	J	0.05	Salt Lake City	2013
PWS Tank Bottoms	Arsenic	180-21899-1	0.0094	0.0094	mg/L	J	0.05	Tulsa	2013
PWS Tank Bottoms	Arsenic	180-2462-1	0.01	0.01	mg/L	J	0.05	Santa Ana	2011
PWS Tank Bottoms	Arsenic	180-604-13	0.024	0.024	mg/L	J	0.05	Salt Lake City	2011
PWS Tank Bottoms	Arsenic	C9E090111001	0.05	0.025	mg/L	U	0.05	Boise	2009
PWS Tank Bottoms	Arsenic	C9E130321001	0.05	0.025	mg/L	U	0.05	Chandler	2009
PWS Tank Bottoms	Arsenic	C9K120427001	0.05	0.025	mg/L	U	0.05	Clackamas	2009
PWS Tank Bottoms	Arsenic	C9H040289003	0.05	0.025	mg/L	U	0.05	Dodge City	2009
PWS Tank Bottoms	Arsenic	C9E210290002	0.05	0.025	mg/L	U	0.05	Oklahoma City	2009
PWS Tank Bottoms	Arsenic	C9D230261001	0.05	0.025	mg/L	U	0.05	Salt Lake City	2009
PWS Tank Bottoms	Arsenic	C9I170278001	0.05	0.025	mg/L	U	0.05	Santa Ana	2009
PWS Tank Bottoms	Arsenic	C9H040288003	0.05	0.025	mg/L	U	0.05	Wichita	2009

PWS Tank Bottoms	Arsenic	C0H100558001	0.05	0.025	mg/L	U	0.05			Boise	2010
PWS Tank Bottoms	Arsenic	C0L080465001	0.05	0.025	mg/L	U	0.05			Clackamas	2010
PWS Tank Bottoms	Arsenic	C0D220565001	0.05	0.025	mg/L	U	0.05			Salt Lake City	2010
PWS Tank Bottoms	Arsenic	180-51960-1	0.1	0.05	mg/L	U	0.1			Farmington	2015
PWS Tank Bottoms	Arsenic	180-67590-2	0.05	0.05	mg/L	J	0.5			Boise	2017
PWS Tank Bottoms	Arsenic	180-44034-1	0.059	0.059	mg/L	J	0.5			Boise	2015
PWS Tank Bottoms	Arsenic	180-77711-1	0.076	0.076	mg/L	J	0.5			Salt Lake City	2018
PWS Tank Bottoms	Arsenic	180-2334-1	0.25	0.125	mg/L	U	0.25			Boise	2011
PWS Tank Bottoms	Arsenic	180-10295-1	0.25	0.125	mg/L	U	0.25			Salt Lake City	2012
PWS Tank Bottoms	Arsenic	180-6080-1	0.25	0.125	mg/L	U	0.25			Sioux Falls	2012
PWS Tank Bottoms	Arsenic	C8E200313001	0.5	0.25	mg/L	U	0.5			Boise	2008
PWS Tank Bottoms	Arsenic	C8H200252001	0.5	0.25	mg/L	U	0.5			Dodge City	2008
PWS Tank Bottoms	Arsenic	C8F130326001	0.5	0.25	mg/L	U	0.5			Fargo	2008
PWS Tank Bottoms	Arsenic	C8D030320001	0.5	0.25	mg/L	U	0.5			Salt Lake City	2008
PWS Tank Bottoms	Arsenic	C8H080290001	0.5	0.25	mg/L	U	0.5			Wichita	2008
PWS Tank Bottoms	Arsenic	180-35833-1	0.5	0.25	mg/L	U	0.5			Dodge City	2014
PWS Tank Bottoms	Arsenic	180-32306-1	0.5	0.25	mg/L	U	0.5			Salt Lake City	2014
PWS Tank Bottoms	Arsenic	180-43578-1	0.5	0.25	mg/L	U	0.5			Chandler	2015
PWS Tank Bottoms	Arsenic	180-43573-1	0.5	0.25	mg/L	U	0.5			Salt Lake City	2015
PWS Tank Bottoms	Arsenic	180-52526-1	0.5	0.25	mg/L	U	0.5	35	56	Boise	2016
PWS Tank Bottoms	Arsenic	180-53484-1	0.5	0.25	mg/L	U	0.5			Chandler	2016
PWS Tank Bottoms	Arsenic	180-53880-1	0.5	0.25	mg/L	U	0.5			Omaha	2016
PWS Tank Bottoms	Arsenic	180-65572-1	0.5	0.25	mg/L	U	0.5			Chandler	2017
PWS Tank Bottoms	Arsenic	180-68912-1	0.5	0.25	mg/L	U	0.5			Farmington	2017
PWS Tank Bottoms	Arsenic	180-65524-1	0.5	0.25	mg/L	U	0.5			Salt Lake City	2017
PWS Tank Bottoms	Arsenic	180-77050-1	0.5	0.25	mg/L	U	0.5			Boise	2018
PWS Tank Bottoms	Arsenic	180-80926-1	0.5	0.25	mg/L	U	0.5			Farmington	2018
PWS Tank Bottoms	Arsenic	180-82828-1	0.5	0.25	mg/L	U	0.5			Oklahoma City	2018
PWS Tank Bottoms	Arsenic	180-80846-1	0.5	0.25	mg/L	U	0.5			Sacramento	2018
PWS Tank Bottoms	Arsenic	C8H250147001	1	0.5	mg/L	U	1			Blaine	2008
PWS Tank Bottoms	Arsenic	C8H250154001	1	0.5	mg/L	U	1			Blaine	2008
PWS Tank Bottoms	Arsenic	C8J030260001	1	0.5	mg/L	U	1			Eagan	2008
PWS Tank Bottoms	Arsenic	C8J030263001	1	0.5	mg/L	U	1			Eagan	2008
PWS Tank Bottoms	Arsenic	C9F060175001	1	0.5	mg/L	U	1			Wichita	2009

PWS Tank Bottoms	Arsenic	C0A200514001	1	0.5	mg/L	U	1	Sacramento	2010
PWS Tank Bottoms	Arsenic	C0I090490001	1	0.5	mg/L	U	1	Santa Ana	2010
PWS Tank Bottoms	Arsenic	180-27070-1	1	0.5	mg/L	U	1	Sacramento	2013
PWS Tank Bottoms	Arsenic	180-32876-1	1	0.5	mg/L	U	1	Boise	2014
PWS Tank Bottoms	Arsenic	180-56702-1	1	0.5	mg/L	U	1	Farmington	2016
PWS Tank Bottoms	Arsenic	180-53843-1	1	0.5	mg/L	U	1	Salt Lake City	2016
PWS Tank Bottoms	Arsenic	180-74608-1	1	0.5	mg/L	U	1	Salisbury	2018
PWS Tank Bottoms	Barium	180-74608-1	0.18	0.18	mg/L	J	20	Salisbury	2018
PWS Tank Bottoms	Barium	180-2334-1	0.44	0.44	mg/L	J	1	Boise	2011
PWS Tank Bottoms	Barium	180-23127-1	0.49	0.49	mg/L		0.2	Wichita	2013
PWS Tank Bottoms	Barium	180-10005-1	0.5	0.5	mg/L	B	0.2	Boise	2012
PWS Tank Bottoms	Barium	180-82828-1	0.5	0.5	mg/L	J	2	Oklahoma City	2018
PWS Tank Bottoms	Barium	C9E130321001	0.58	0.58	mg/L		0.2	Chandler	2009
PWS Tank Bottoms	Barium	C9I170278001	0.59	0.59	mg/L		0.2	Santa Ana	2009
PWS Tank Bottoms	Barium	180-20714-1	0.59	0.59	mg/L	B	0.2	Salt Lake City	2013
PWS Tank Bottoms	Barium	180-65572-1	0.59	0.59	mg/L	J	2	Chandler	2017
PWS Tank Bottoms	Barium	180-43573-1	0.62	0.62	mg/L	J B	2	Salt Lake City	2015
PWS Tank Bottoms	Barium	180-604-13	0.63	0.63	mg/L		0.2	Salt Lake City	2011
PWS Tank Bottoms	Barium	180-32306-1	0.63	0.63	mg/L	J B	2	Salt Lake City	2014
PWS Tank Bottoms	Barium	180-43578-1	0.67	0.67	mg/L	J B	2	Chandler	2015
PWS Tank Bottoms	Barium	180-10295-1	0.68	0.68	mg/L	J	1	Salt Lake City	2012
PWS Tank Bottoms	Barium	180-65524-1	0.69	0.69	mg/L	J	2	Salt Lake City	2017
PWS Tank Bottoms	Barium	C9E090111001	0.71	0.71	mg/L		0.2	Boise	2009
PWS Tank Bottoms	Barium	180-80846-1	0.71	0.71	mg/L	J B	2	Sacramento	2018
PWS Tank Bottoms	Barium	180-53484-1	0.77	0.77	mg/L	J B	2	Chandler	2016
PWS Tank Bottoms	Barium	180-27070-1	0.78	0.78	mg/L	J B	20	Sacramento	2013
PWS Tank Bottoms	Barium	C0D220565001	0.79	0.79	mg/L		0.2	Salt Lake City	2010
PWS Tank Bottoms	Barium	C9H040289003	0.83	0.83	mg/L		0.2	Dodge City	2009
PWS Tank Bottoms	Barium	180-2452-1	0.83	0.83	mg/L	B	0.2	Chandler	2011
PWS Tank Bottoms	Barium	180-2462-1	0.85	0.85	mg/L	B	0.2	Santa Ana	2011
PWS Tank Bottoms	Barium	180-21899-1	0.85	0.85	mg/L	B	0.2	Tulsa	2013
PWS Tank Bottoms	Barium	180-77050-1	0.93	0.93	mg/L	J	2	Boise	2018
PWS Tank Bottoms	Barium	180-77711-1	0.93	0.93	mg/L	J	2	Salt Lake City	2018
PWS Tank Bottoms	Barium	180-68912-1	0.96	0.96	mg/L	J	2	Farmington	2017

PWS Tank Bottoms	Barium	180-44034-1	0.97	0.97	mg/L	J	2			Boise	2015
PWS Tank Bottoms	Barium	C9K120427001	1	1	mg/L		0.2			Clackamas	2009
PWS Tank Bottoms	Barium	180-6080-1	1	1	mg/L		1			Sioux Falls	2012
PWS Tank Bottoms	Barium	180-51960-1	2	1	mg/L	U	2			Farmington	2015
PWS Tank Bottoms	Barium	C9E210290002	1.1	1.1	mg/L		0.2			Oklahoma City	2009
PWS Tank Bottoms	Barium	C9D230261001	1.1	1.1	mg/L		0.2			Salt Lake City	2009
PWS Tank Bottoms	Barium	C0L080465001	1.1	1.1	mg/L		0.2			Clackamas	2010
PWS Tank Bottoms	Barium	180-35833-1	1.1	1.1	mg/L	J B	2	35	56	Dodge City	2014
PWS Tank Bottoms	Barium	180-52526-1	1.1	1.1	mg/L	J B	2			Boise	2016
PWS Tank Bottoms	Barium	180-53880-1	1.1	1.1	mg/L	J B	2			Omaha	2016
PWS Tank Bottoms	Barium	180-80926-1	1.1	1.1	mg/L	J	2			Farmington	2018
PWS Tank Bottoms	Barium	180-67590-2	1.3	1.3	mg/L	J	2			Boise	2017
PWS Tank Bottoms	Barium	C0H100558001	1.4	1.4	mg/L		0.2			Boise	2010
PWS Tank Bottoms	Barium	C9H040288003	1.6	1.6	mg/L		0.2			Wichita	2009
PWS Tank Bottoms	Barium	180-53843-1	1.7	1.7	mg/L	J	20			Salt Lake City	2016
PWS Tank Bottoms	Barium	180-32876-1	2	2	mg/L	J	20			Boise	2014
PWS Tank Bottoms	Barium	C8E200313001	10	5	mg/L	U	10			Boise	2008
PWS Tank Bottoms	Barium	C8H200252001	10	5	mg/L	U	10			Dodge City	2008
PWS Tank Bottoms	Barium	C8F130326001	10	5	mg/L	U	10			Fargo	2008
PWS Tank Bottoms	Barium	C8D030320001	10	5	mg/L	U	10			Salt Lake City	2008
PWS Tank Bottoms	Barium	C8H080290001	10	5	mg/L	U	10			Wichita	2008
PWS Tank Bottoms	Barium	C8H250147001	20	10	mg/L	U	20			Blaine	2008
PWS Tank Bottoms	Barium	C8H250154001	20	10	mg/L	U	20			Blaine	2008
PWS Tank Bottoms	Barium	C8J030260001	20	10	mg/L	U	20			Eagan	2008
PWS Tank Bottoms	Barium	C8J030263001	20	10	mg/L	U	20			Eagan	2008
PWS Tank Bottoms	Barium	C9F060175001	20	10	mg/L	U	20			Wichita	2009
PWS Tank Bottoms	Barium	C0A200514001	20	10	mg/L	U	20			Sacramento	2010
PWS Tank Bottoms	Barium	C0I090490001	20	10	mg/L	U	20			Santa Ana	2010
PWS Tank Bottoms	Barium	180-56702-1	20	10	mg/L	U	20			Farmington	2016
PWS Tank Bottoms	Benzene	C8E200313001	0.2	0.1	mg/L	U	0.2			Boise	2008
PWS Tank Bottoms	Benzene	C8H200252001	0.2	0.1	mg/L	U	0.2			Dodge City	2008
PWS Tank Bottoms	Benzene	C8F130326001	0.2	0.1	mg/L	U	0.2			Fargo	2008
PWS Tank Bottoms	Benzene	C8D030320001	0.2	0.1	mg/L	U	0.2			Salt Lake City	2008
PWS Tank Bottoms	Benzene	C8H080290001	0.2	0.1	mg/L	U	0.2			Wichita	2008

PWS Tank Bottoms	Benzene	C9E090111001	0.2	0.1	mg/L	U	0.2			Boise	2009
PWS Tank Bottoms	Benzene	C9E130321001	0.2	0.1	mg/L	U	0.2			Chandler	2009
PWS Tank Bottoms	Benzene	C9K120427001	0.2	0.1	mg/L	U	0.2			Clackamas	2009
PWS Tank Bottoms	Benzene	C9H040289003	0.2	0.1	mg/L	U	0.2			Dodge City	2009
PWS Tank Bottoms	Benzene	C9E210290002	0.2	0.1	mg/L	U	0.2			Oklahoma City	2009
PWS Tank Bottoms	Benzene	C9D230261001	0.2	0.1	mg/L	U	0.2			Salt Lake City	2009
PWS Tank Bottoms	Benzene	C9I170278001	0.2	0.1	mg/L	U	0.2			Santa Ana	2009
PWS Tank Bottoms	Benzene	C9H040288003	0.2	0.1	mg/L	U	0.2			Wichita	2009
PWS Tank Bottoms	Benzene	C0H100558001	0.2	0.1	mg/L	U	0.2			Boise	2010
PWS Tank Bottoms	Benzene	C0L080465001	0.2	0.1	mg/L	U	0.2			Clackamas	2010
PWS Tank Bottoms	Benzene	C0D220565001	0.2	0.1	mg/L	U	0.2			Salt Lake City	2010
PWS Tank Bottoms	Benzene	180-2334-1	0.2	0.1	mg/L	U	0.2			Boise	2011
PWS Tank Bottoms	Benzene	180-2452-1	0.2	0.1	mg/L	U	0.2			Chandler	2011
PWS Tank Bottoms	Benzene	180-2462-1	0.2	0.1	mg/L	U	0.2			Santa Ana	2011
PWS Tank Bottoms	Benzene	180-10005-1	0.2	0.1	mg/L	U	0.2			Boise	2012
PWS Tank Bottoms	Benzene	180-10295-1	0.2	0.1	mg/L	U	0.2			Salt Lake City	2012
PWS Tank Bottoms	Benzene	180-6080-1	0.2	0.1	mg/L	U	0.2			Sioux Falls	2012
PWS Tank Bottoms	Benzene	180-20714-1	0.2	0.1	mg/L	U	0.2			Salt Lake City	2013
PWS Tank Bottoms	Benzene	180-21899-1	0.2	0.1	mg/L	U	0.2			Tulsa	2013
PWS Tank Bottoms	Benzene	180-23127-1	0.2	0.1	mg/L	U	0.2			Wichita	2013
PWS Tank Bottoms	Benzene	180-35833-1	0.2	0.1	mg/L	U	0.2			Dodge City	2014
PWS Tank Bottoms	Benzene	180-32306-1	0.2	0.1	mg/L	U	0.2			Salt Lake City	2014
PWS Tank Bottoms	Benzene	180-44034-1	0.2	0.1	mg/L	U	0.2			Boise	2015
PWS Tank Bottoms	Benzene	180-43578-1	0.2	0.1	mg/L	U	0.2			Chandler	2015
PWS Tank Bottoms	Benzene	180-43573-1	0.2	0.1	mg/L	U	0.2			Salt Lake City	2015
PWS Tank Bottoms	Benzene	180-51960-1	0.2	0.1	mg/L	U	0.2			Farmington	2015
PWS Tank Bottoms	Benzene	180-52526-1	0.2	0.1	mg/L	U H	0.2			Boise	2016
PWS Tank Bottoms	Benzene	180-53484-1	0.2	0.1	mg/L	U	0.2			Chandler	2016
PWS Tank Bottoms	Benzene	180-53880-1	0.2	0.1	mg/L	U	0.2			Omaha	2016
PWS Tank Bottoms	Benzene	180-67590-2	0.2	0.1	mg/L	U	0.2	35	56	Boise	2017
PWS Tank Bottoms	Benzene	180-65572-1	0.2	0.1	mg/L	U	0.2			Chandler	2017
PWS Tank Bottoms	Benzene	180-68912-1	0.2	0.1	mg/L	U	0.2			Farmington	2017
PWS Tank Bottoms	Benzene	180-65524-1	0.2	0.1	mg/L	U	0.2			Salt Lake City	2017
PWS Tank Bottoms	Benzene	180-77050-1	0.2	0.1	mg/L	U	0.2			Boise	2018

PWS Tank Bottoms	Benzene	180-80926-1	0.2	0.1	mg/L	U	0.2	Farmington	2018
PWS Tank Bottoms	Benzene	180-82828-1	0.2	0.1	mg/L	U	0.2	Oklahoma City	2018
PWS Tank Bottoms	Benzene	180-80846-1	0.2	0.1	mg/L	U	0.2	Sacramento	2018
PWS Tank Bottoms	Benzene	180-77711-1	0.2	0.1	mg/L	U	0.2	Salt Lake City	2018
PWS Tank Bottoms	Benzene	180-56702-1	0.25	0.125	mg/L	U	0.25	Farmington	2016
PWS Tank Bottoms	Benzene	180-604-11	0.5	0.25	mg/L	U	0.5	Salt Lake City	2011
PWS Tank Bottoms	Benzene	180-74608-1	0.86	0.86	mg/L		0.25	Salisbury	2018
PWS Tank Bottoms	Benzene	180-32876-1	1.4	1.4	mg/L		0.25	Boise	2014
PWS Tank Bottoms	Benzene	C8H250147001	1.6	1.6	mg/L		0.25	Blaine	2008
PWS Tank Bottoms	Benzene	C8H250154001	1.7	1.7	mg/L		0.25	Blaine	2008
PWS Tank Bottoms	Benzene	C8J030263001	2	2	mg/L		0.25	Eagan	2008
PWS Tank Bottoms	Benzene	C9F060175001	2.3	2.3	mg/L		0.25	Wichita	2009
PWS Tank Bottoms	Benzene	C8J030260001	2.5	2.5	mg/L		0.25	Eagan	2008
PWS Tank Bottoms	Benzene	C0A200514001	3.1	3.1	mg/L		0.5	Sacramento	2010
PWS Tank Bottoms	Benzene	180-53843-1	3.7	3.7	mg/L		0.25	Salt Lake City	2016
PWS Tank Bottoms	Benzene	180-27070-1	4.1	4.1	mg/L		0.25	Sacramento	2013
PWS Tank Bottoms	Benzene	C0I090490001	9.9	9.9	mg/L		0.25	Santa Ana	2010
PWS Tank Bottoms	Bulk Density	180-82828-1	0.8	0.8	g/cc		0.01	Oklahoma City	2018
PWS Tank Bottoms	Bulk Density	180-77711-1	1.1	1.1	g/cc		0.01	Salt Lake City	2018
PWS Tank Bottoms	Bulk Density	180-77050-1	1.2	1.2	g/cc		0.01	Boise	2018
PWS Tank Bottoms	Cadmium	180-82828-1	0.017	0.017	mg/L	J	0.5	Oklahoma City	2018
PWS Tank Bottoms	Cadmium	180-56702-1	0.022	0.022	mg/L	J B	0.5	Farmington	2016
PWS Tank Bottoms	Cadmium	180-51960-1	0.05	0.025	mg/L	U	0.05	Farmington	2015
PWS Tank Bottoms	Cadmium	180-74608-1	0.038	0.038	mg/L	J	0.5	Salisbury	2018
PWS Tank Bottoms	Cadmium	C0H100558001	0.1	0.05	mg/L	U	0.1	Boise	2010
PWS Tank Bottoms	Cadmium	180-35833-1	0.091	0.091	mg/L	J	0.5	Dodge City	2014
PWS Tank Bottoms	Cadmium	180-68912-1	0.096	0.096	mg/L	J B	0.5	Farmington	2017
PWS Tank Bottoms	Cadmium	180-6080-1	0.11	0.11	mg/L	J	0.25	Sioux Falls	2012
PWS Tank Bottoms	Cadmium	180-20714-1	0.11	0.11	mg/L		0.05	Salt Lake City	2013
PWS Tank Bottoms	Cadmium	180-53843-1	0.18	0.18	mg/L	J	0.5	Salt Lake City	2016
PWS Tank Bottoms	Cadmium	C8F130326001	0.21	0.21	mg/L		0.1	Fargo	2008
PWS Tank Bottoms	Cadmium	C9H040288003	0.23	0.23	mg/L		0.05	Wichita	2009
PWS Tank Bottoms	Cadmium	180-2334-1	0.23	0.23	mg/L	J	0.25	Boise	2011
PWS Tank Bottoms	Cadmium	180-10005-1	0.23	0.23	mg/L		0.05	Boise	2012

PWS Tank Bottoms	Cadmium	C8H250147001	0.5	0.25	mg/L	U	0.5			Blaine	2008
PWS Tank Bottoms	Cadmium	C8H250154001	0.5	0.25	mg/L	U	0.5			Blaine	2008
PWS Tank Bottoms	Cadmium	C8J030260001	0.5	0.25	mg/L	U	0.5			Eagan	2008
PWS Tank Bottoms	Cadmium	C8J030263001	0.5	0.25	mg/L	U	0.5			Eagan	2008
PWS Tank Bottoms	Cadmium	C9F060175001	0.5	0.25	mg/L	U	0.5			Wichita	2009
PWS Tank Bottoms	Cadmium	180-32876-1	0.25	0.25	mg/L	J	0.5			Boise	2014
PWS Tank Bottoms	Cadmium	180-80926-1	0.27	0.27	mg/L	J	0.5			Farmington	2018
PWS Tank Bottoms	Cadmium	C8H200252001	0.28	0.28	mg/L		0.1			Dodge City	2008
PWS Tank Bottoms	Cadmium	C8H080290001	0.28	0.28	mg/L		0.1			Wichita	2008
PWS Tank Bottoms	Cadmium	C8E200313001	0.35	0.35	mg/L		0.1			Boise	2008
PWS Tank Bottoms	Cadmium	180-27070-1	0.35	0.35	mg/L	J	0.5			Sacramento	2013
PWS Tank Bottoms	Cadmium	180-21899-1	0.39	0.39	mg/L		0.05			Tulsa	2013
PWS Tank Bottoms	Cadmium	C9E130321001	0.41	0.41	mg/L		0.05			Chandler	2009
PWS Tank Bottoms	Cadmium	180-52526-1	0.41	0.41	mg/L	J	0.5			Boise	2016
PWS Tank Bottoms	Cadmium	C9E090111001	0.45	0.45	mg/L		0.05			Boise	2009
PWS Tank Bottoms	Cadmium	180-77050-1	0.49	0.49	mg/L	J	0.5			Boise	2018
PWS Tank Bottoms	Cadmium	180-32306-1	0.53	0.53	mg/L		0.5			Salt Lake City	2014
PWS Tank Bottoms	Cadmium	180-43573-1	0.54	0.54	mg/L		0.5			Salt Lake City	2015
PWS Tank Bottoms	Cadmium	180-53484-1	0.55	0.55	mg/L		0.5			Chandler	2016
PWS Tank Bottoms	Cadmium	180-44034-1	0.56	0.56	mg/L		0.5			Boise	2015
PWS Tank Bottoms	Cadmium	180-67590-2	0.56	0.56	mg/L		0.5	35	56	Boise	2017
PWS Tank Bottoms	Cadmium	C0L080465001	0.65	0.65	mg/L		0.05			Clackamas	2010
PWS Tank Bottoms	Cadmium	180-10295-1	0.66	0.66	mg/L		0.25			Salt Lake City	2012
PWS Tank Bottoms	Cadmium	180-65572-1	0.67	0.67	mg/L		0.5			Chandler	2017
PWS Tank Bottoms	Cadmium	C8D030320001	0.69	0.69	mg/L		0.1			Salt Lake City	2008
PWS Tank Bottoms	Cadmium	180-53880-1	0.76	0.76	mg/L		0.5			Omaha	2016
PWS Tank Bottoms	Cadmium	C9K120427001	0.84	0.84	mg/L		0.05			Clackamas	2009
PWS Tank Bottoms	Cadmium	C9D230261001	0.84	0.84	mg/L		0.05			Salt Lake City	2009
PWS Tank Bottoms	Cadmium	C9E210290002	0.95	0.95	mg/L		0.05			Oklahoma City	2009
PWS Tank Bottoms	Cadmium	180-2452-1	0.95	0.95	mg/L	B	0.05			Chandler	2011
PWS Tank Bottoms	Cadmium	C0A200514001	1	1	mg/L		0.5			Sacramento	2010
PWS Tank Bottoms	Cadmium	C9I170278001	1.1	1.1	mg/L		0.05			Santa Ana	2009
PWS Tank Bottoms	Cadmium	C0I090490001	1.1	1.1	mg/L		0.5			Santa Ana	2010
PWS Tank Bottoms	Cadmium	180-43578-1	1.1	1.1	mg/L		0.5			Chandler	2015

PWS Tank Bottoms	Cadmium	C9H040289003	1.3	1.3	mg/L		0.05	Dodge City	2009
PWS Tank Bottoms	Cadmium	180-65524-1	1.3	1.3	mg/L		0.5	Salt Lake City	2017
PWS Tank Bottoms	Cadmium	180-23127-1	1.4	1.4	mg/L		0.05	Wichita	2013
PWS Tank Bottoms	Cadmium	180-77711-1	1.4	1.4	mg/L	F1	0.5	Salt Lake City	2018
PWS Tank Bottoms	Cadmium	180-604-13	1.5	1.5	mg/L		0.05	Salt Lake City	2011
PWS Tank Bottoms	Cadmium	C0D220565001	1.8	1.8	mg/L		0.05	Salt Lake City	2010
PWS Tank Bottoms	Cadmium	180-2462-1	2.1	2.1	mg/L		0.05	Santa Ana	2011
PWS Tank Bottoms	Cadmium	180-80846-1	2.2	2.2	mg/L		0.5	Sacramento	2018
PWS Tank Bottoms	Carbon Tetrachloride	C8E200313001	0.2	0.1	mg/L	U	0.2	Boise	2008
PWS Tank Bottoms	Carbon Tetrachloride	C8H200252001	0.2	0.1	mg/L	U	0.2	Dodge City	2008
PWS Tank Bottoms	Carbon Tetrachloride	C8F130326001	0.2	0.1	mg/L	U	0.2	Fargo	2008
PWS Tank Bottoms	Carbon Tetrachloride	C8D030320001	0.2	0.1	mg/L	U	0.2	Salt Lake City	2008
PWS Tank Bottoms	Carbon Tetrachloride	C8H080290001	0.2	0.1	mg/L	U	0.2	Wichita	2008
PWS Tank Bottoms	Carbon Tetrachloride	C9E090111001	0.2	0.1	mg/L	U	0.2	Boise	2009
PWS Tank Bottoms	Carbon Tetrachloride	C9E130321001	0.2	0.1	mg/L	U	0.2	Chandler	2009
PWS Tank Bottoms	Carbon Tetrachloride	C9K120427001	0.2	0.1	mg/L	U	0.2	Clackamas	2009
PWS Tank Bottoms	Carbon Tetrachloride	C9H040289003	0.2	0.1	mg/L	U	0.2	Dodge City	2009
PWS Tank Bottoms	Carbon Tetrachloride	C9E210290002	0.2	0.1	mg/L	U	0.2	Oklahoma City	2009
PWS Tank Bottoms	Carbon Tetrachloride	C9D230261001	0.2	0.1	mg/L	U	0.2	Salt Lake City	2009
PWS Tank Bottoms	Carbon Tetrachloride	C9I170278001	0.2	0.1	mg/L	U	0.2	Santa Ana	2009
PWS Tank Bottoms	Carbon Tetrachloride	C9H040288003	0.2	0.1	mg/L	U	0.2	Wichita	2009
PWS Tank Bottoms	Carbon Tetrachloride	C0H100558001	0.2	0.1	mg/L	U	0.2	Boise	2010
PWS Tank Bottoms	Carbon Tetrachloride	C0L080465001	0.2	0.1	mg/L	U	0.2	Clackamas	2010
PWS Tank Bottoms	Carbon Tetrachloride	C0D220565001	0.2	0.1	mg/L	U	0.2	Salt Lake City	2010
PWS Tank Bottoms	Carbon Tetrachloride	180-2334-1	0.2	0.1	mg/L	U	0.2	Boise	2011
PWS Tank Bottoms	Carbon Tetrachloride	180-2452-1	0.2	0.1	mg/L	U	0.2	Chandler	2011
PWS Tank Bottoms	Carbon Tetrachloride	180-2462-1	0.2	0.1	mg/L	U	0.2	Santa Ana	2011
PWS Tank Bottoms	Carbon Tetrachloride	180-10005-1	0.2	0.1	mg/L	U	0.2	Boise	2012
PWS Tank Bottoms	Carbon Tetrachloride	180-10295-1	0.2	0.1	mg/L	U	0.2	Salt Lake City	2012
PWS Tank Bottoms	Carbon Tetrachloride	180-6080-1	0.2	0.1	mg/L	U	0.2	Sioux Falls	2012
PWS Tank Bottoms	Carbon Tetrachloride	180-20714-1	0.2	0.1	mg/L	U	0.2	Salt Lake City	2013
PWS Tank Bottoms	Carbon Tetrachloride	180-21899-1	0.2	0.1	mg/L	U	0.2	Tulsa	2013
PWS Tank Bottoms	Carbon Tetrachloride	180-23127-1	0.2	0.1	mg/L	U	0.2	Wichita	2013
PWS Tank Bottoms	Carbon Tetrachloride	180-35833-1	0.2	0.1	mg/L	U	0.2	Dodge City	2014

PWS Tank Bottoms	Carbon Tetrachloride	180-32306-1	0.2	0.1	mg/L	U	0.2			Salt Lake City	2014
PWS Tank Bottoms	Carbon Tetrachloride	180-44034-1	0.2	0.1	mg/L	U	0.2			Boise	2015
PWS Tank Bottoms	Carbon Tetrachloride	180-43578-1	0.2	0.1	mg/L	U	0.2			Chandler	2015
PWS Tank Bottoms	Carbon Tetrachloride	180-43573-1	0.2	0.1	mg/L	U	0.2			Salt Lake City	2015
PWS Tank Bottoms	Carbon Tetrachloride	180-51960-1	0.2	0.1	mg/L	U	0.2			Farmington	2015
PWS Tank Bottoms	Carbon Tetrachloride	180-52526-1	0.2	0.1	mg/L	U H	0.2			Boise	2016
PWS Tank Bottoms	Carbon Tetrachloride	180-53484-1	0.2	0.1	mg/L	U	0.2			Chandler	2016
PWS Tank Bottoms	Carbon Tetrachloride	180-53880-1	0.2	0.1	mg/L	U	0.2			Omaha	2016
PWS Tank Bottoms	Carbon tetrachloride	180-67590-2	0.2	0.1	mg/L	U	0.2	35	56	Boise	2017
PWS Tank Bottoms	Carbon tetrachloride	180-65572-1	0.2	0.1	mg/L	U	0.2			Chandler	2017
PWS Tank Bottoms	Carbon tetrachloride	180-68912-1	0.2	0.1	mg/L	U	0.2			Farmington	2017
PWS Tank Bottoms	Carbon tetrachloride	180-65524-1	0.2	0.1	mg/L	U	0.2			Salt Lake City	2017
PWS Tank Bottoms	Carbon tetrachloride	180-77050-1	0.2	0.1	mg/L	U	0.2			Boise	2018
PWS Tank Bottoms	Carbon tetrachloride	180-80926-1	0.2	0.1	mg/L	U	0.2			Farmington	2018
PWS Tank Bottoms	Carbon tetrachloride	180-82828-1	0.2	0.1	mg/L	U	0.2			Oklahoma City	2018
PWS Tank Bottoms	Carbon tetrachloride	180-80846-1	0.2	0.1	mg/L	U	0.2			Sacramento	2018
PWS Tank Bottoms	Carbon tetrachloride	180-77711-1	0.2	0.1	mg/L	U	0.2			Salt Lake City	2018
PWS Tank Bottoms	Carbon Tetrachloride	C8H250147001	0.25	0.125	mg/L	U	0.25			Blaine	2008
PWS Tank Bottoms	Carbon Tetrachloride	C8H250154001	0.25	0.125	mg/L	U	0.25			Blaine	2008
PWS Tank Bottoms	Carbon Tetrachloride	C8J030260001	0.25	0.125	mg/L	U	0.25			Eagan	2008
PWS Tank Bottoms	Carbon Tetrachloride	C8J030263001	0.25	0.125	mg/L	U	0.25			Eagan	2008
PWS Tank Bottoms	Carbon Tetrachloride	C9F060175001	0.25	0.125	mg/L	U	0.25			Wichita	2009
PWS Tank Bottoms	Carbon Tetrachloride	C0I090490001	0.25	0.125	mg/L	U	0.25			Santa Ana	2010
PWS Tank Bottoms	Carbon Tetrachloride	180-27070-1	0.25	0.125	mg/L	U	0.25			Sacramento	2013
PWS Tank Bottoms	Carbon Tetrachloride	180-32876-1	0.25	0.125	mg/L	U	0.25			Boise	2014
PWS Tank Bottoms	Carbon Tetrachloride	180-56702-1	0.25	0.125	mg/L	U	0.25			Farmington	2016
PWS Tank Bottoms	Carbon Tetrachloride	180-53843-1	0.25	0.125	mg/L	U	0.25			Salt Lake City	2016
PWS Tank Bottoms	Carbon tetrachloride	180-74608-1	0.25	0.125	mg/L	U	0.25			Salisbury	2018
PWS Tank Bottoms	Carbon Tetrachloride	C0A200514001	0.5	0.25	mg/L	U	0.5			Sacramento	2010
PWS Tank Bottoms	Carbon Tetrachloride	180-604-11	0.5	0.25	mg/L	U	0.5			Salt Lake City	2011
PWS Tank Bottoms	Chlorobenzene	C8E200313001	0.2	0.1	mg/L	U	0.2			Boise	2008
PWS Tank Bottoms	Chlorobenzene	C8H200252001	0.2	0.1	mg/L	U	0.2			Dodge City	2008
PWS Tank Bottoms	Chlorobenzene	C8F130326001	0.2	0.1	mg/L	U	0.2			Fargo	2008
PWS Tank Bottoms	Chlorobenzene	C8D030320001	0.2	0.1	mg/L	U	0.2			Salt Lake City	2008

PWS Tank Bottoms	Chlorobenzene	C8H080290001	0.2	0.1	mg/L	U	0.2			Wichita	2008
PWS Tank Bottoms	Chlorobenzene	C9E090111001	0.2	0.1	mg/L	U	0.2			Boise	2009
PWS Tank Bottoms	Chlorobenzene	C9E130321001	0.2	0.1	mg/L	U	0.2			Chandler	2009
PWS Tank Bottoms	Chlorobenzene	C9K120427001	0.2	0.1	mg/L	U	0.2			Clackamas	2009
PWS Tank Bottoms	Chlorobenzene	C9H040289003	0.2	0.1	mg/L	U	0.2			Dodge City	2009
PWS Tank Bottoms	Chlorobenzene	C9E210290002	0.2	0.1	mg/L	U	0.2			Oklahoma City	2009
PWS Tank Bottoms	Chlorobenzene	C9D230261001	0.2	0.1	mg/L	U	0.2			Salt Lake City	2009
PWS Tank Bottoms	Chlorobenzene	C9I170278001	0.2	0.1	mg/L	U	0.2			Santa Ana	2009
PWS Tank Bottoms	Chlorobenzene	C9H040288003	0.2	0.1	mg/L	U	0.2			Wichita	2009
PWS Tank Bottoms	Chlorobenzene	C0H100558001	0.2	0.1	mg/L	U	0.2			Boise	2010
PWS Tank Bottoms	Chlorobenzene	C0L080465001	0.2	0.1	mg/L	U	0.2			Clackamas	2010
PWS Tank Bottoms	Chlorobenzene	C0D220565001	0.2	0.1	mg/L	U	0.2			Salt Lake City	2010
PWS Tank Bottoms	Chlorobenzene	180-2334-1	0.2	0.1	mg/L	U	0.2			Boise	2011
PWS Tank Bottoms	Chlorobenzene	180-2452-1	0.2	0.1	mg/L	U	0.2			Chandler	2011
PWS Tank Bottoms	Chlorobenzene	180-2462-1	0.2	0.1	mg/L	U	0.2			Santa Ana	2011
PWS Tank Bottoms	Chlorobenzene	180-10005-1	0.2	0.1	mg/L	U	0.2			Boise	2012
PWS Tank Bottoms	Chlorobenzene	180-10295-1	0.2	0.1	mg/L	U	0.2			Salt Lake City	2012
PWS Tank Bottoms	Chlorobenzene	180-6080-1	0.2	0.1	mg/L	U	0.2			Sioux Falls	2012
PWS Tank Bottoms	Chlorobenzene	180-20714-1	0.2	0.1	mg/L	U	0.2			Salt Lake City	2013
PWS Tank Bottoms	Chlorobenzene	180-21899-1	0.2	0.1	mg/L	U	0.2			Tulsa	2013
PWS Tank Bottoms	Chlorobenzene	180-23127-1	0.2	0.1	mg/L	U	0.2			Wichita	2013
PWS Tank Bottoms	Chlorobenzene	180-35833-1	0.2	0.1	mg/L	U	0.2			Dodge City	2014
PWS Tank Bottoms	Chlorobenzene	180-32306-1	0.2	0.1	mg/L	U	0.2			Salt Lake City	2014
PWS Tank Bottoms	Chlorobenzene	180-44034-1	0.2	0.1	mg/L	U	0.2			Boise	2015
PWS Tank Bottoms	Chlorobenzene	180-43578-1	0.2	0.1	mg/L	U	0.2			Chandler	2015
PWS Tank Bottoms	Chlorobenzene	180-43573-1	0.2	0.1	mg/L	U	0.2			Salt Lake City	2015
PWS Tank Bottoms	Chlorobenzene	180-51960-1	0.2	0.1	mg/L	U *	0.2			Farmington	2015
PWS Tank Bottoms	Chlorobenzene	180-52526-1	0.2	0.1	mg/L	U H	0.2			Boise	2016
PWS Tank Bottoms	Chlorobenzene	180-53484-1	0.2	0.1	mg/L	U	0.2			Chandler	2016
PWS Tank Bottoms	Chlorobenzene	180-53880-1	0.2	0.1	mg/L	U	0.2			Omaha	2016
PWS Tank Bottoms	Chlorobenzene	180-67590-2	0.2	0.1	mg/L	U	0.2	35	56	Boise	2017
PWS Tank Bottoms	Chlorobenzene	180-65572-1	0.2	0.1	mg/L	U	0.2			Chandler	2017
PWS Tank Bottoms	Chlorobenzene	180-68912-1	0.2	0.1	mg/L	U	0.2			Farmington	2017
PWS Tank Bottoms	Chlorobenzene	180-65524-1	0.2	0.1	mg/L	U	0.2			Salt Lake City	2017

PWS Tank Bottoms	Chlorobenzene	180-77050-1	0.2	0.1	mg/L	U	0.2	Boise	2018
PWS Tank Bottoms	Chlorobenzene	180-80926-1	0.2	0.1	mg/L	U	0.2	Farmington	2018
PWS Tank Bottoms	Chlorobenzene	180-82828-1	0.2	0.1	mg/L	U	0.2	Oklahoma City	2018
PWS Tank Bottoms	Chlorobenzene	180-80846-1	0.2	0.1	mg/L	U	0.2	Sacramento	2018
PWS Tank Bottoms	Chlorobenzene	180-77711-1	0.2	0.1	mg/L	U	0.2	Salt Lake City	2018
PWS Tank Bottoms	Chlorobenzene	C8H250147001	0.25	0.125	mg/L	U	0.25	Blaine	2008
PWS Tank Bottoms	Chlorobenzene	C8H250154001	0.25	0.125	mg/L	U	0.25	Blaine	2008
PWS Tank Bottoms	Chlorobenzene	C8J030260001	0.25	0.125	mg/L	U	0.25	Eagan	2008
PWS Tank Bottoms	Chlorobenzene	C8J030263001	0.25	0.125	mg/L	U	0.25	Eagan	2008
PWS Tank Bottoms	Chlorobenzene	C9F060175001	0.25	0.125	mg/L	U	0.25	Wichita	2009
PWS Tank Bottoms	Chlorobenzene	C0I090490001	0.25	0.125	mg/L	U	0.25	Santa Ana	2010
PWS Tank Bottoms	Chlorobenzene	180-27070-1	0.25	0.125	mg/L	U	0.25	Sacramento	2013
PWS Tank Bottoms	Chlorobenzene	180-32876-1	0.25	0.125	mg/L	U	0.25	Boise	2014
PWS Tank Bottoms	Chlorobenzene	180-56702-1	0.25	0.125	mg/L	U	0.25	Farmington	2016
PWS Tank Bottoms	Chlorobenzene	180-53843-1	0.25	0.125	mg/L	U	0.25	Salt Lake City	2016
PWS Tank Bottoms	Chlorobenzene	180-74608-1	0.25	0.125	mg/L	U	0.25	Salisbury	2018
PWS Tank Bottoms	Chlorobenzene	C0A200514001	0.5	0.25	mg/L	U	0.5	Sacramento	2010
PWS Tank Bottoms	Chlorobenzene	180-604-11	0.5	0.25	mg/L	U	0.5	Salt Lake City	2011
PWS Tank Bottoms	Chloroform	C8E200313001	0.2	0.1	mg/L	U	0.2	Boise	2008
PWS Tank Bottoms	Chloroform	C8H200252001	0.2	0.1	mg/L	U	0.2	Dodge City	2008
PWS Tank Bottoms	Chloroform	C8F130326001	0.2	0.1	mg/L	U	0.2	Fargo	2008
PWS Tank Bottoms	Chloroform	C8D030320001	0.2	0.1	mg/L	U	0.2	Salt Lake City	2008
PWS Tank Bottoms	Chloroform	C8H080290001	0.2	0.1	mg/L	U	0.2	Wichita	2008
PWS Tank Bottoms	Chloroform	C9E090111001	0.2	0.1	mg/L	U	0.2	Boise	2009
PWS Tank Bottoms	Chloroform	C9E130321001	0.2	0.1	mg/L	U	0.2	Chandler	2009
PWS Tank Bottoms	Chloroform	C9K120427001	0.2	0.1	mg/L	U	0.2	Clackamas	2009
PWS Tank Bottoms	Chloroform	C9H040289003	0.2	0.1	mg/L	U	0.2	Dodge City	2009
PWS Tank Bottoms	Chloroform	C9E210290002	0.2	0.1	mg/L	U	0.2	Oklahoma City	2009
PWS Tank Bottoms	Chloroform	C9D230261001	0.2	0.1	mg/L	U	0.2	Salt Lake City	2009
PWS Tank Bottoms	Chloroform	C9I170278001	0.2	0.1	mg/L	U	0.2	Santa Ana	2009
PWS Tank Bottoms	Chloroform	C9H040288003	0.2	0.1	mg/L	U	0.2	Wichita	2009
PWS Tank Bottoms	Chloroform	C0H100558001	0.2	0.1	mg/L	U	0.2	Boise	2010
PWS Tank Bottoms	Chloroform	C0L080465001	0.2	0.1	mg/L	U	0.2	Clackamas	2010
PWS Tank Bottoms	Chloroform	C0D220565001	0.2	0.1	mg/L	U	0.2	Salt Lake City	2010

PWS Tank Bottoms	Chloroform	180-2334-1	0.2	0.1	mg/L	U	0.2			Boise	2011
PWS Tank Bottoms	Chloroform	180-2452-1	0.2	0.1	mg/L	U	0.2			Chandler	2011
PWS Tank Bottoms	Chloroform	180-2462-1	0.2	0.1	mg/L	U	0.2			Santa Ana	2011
PWS Tank Bottoms	Chloroform	180-10005-1	0.2	0.1	mg/L	U	0.2			Boise	2012
PWS Tank Bottoms	Chloroform	180-10295-1	0.2	0.1	mg/L	U	0.2			Salt Lake City	2012
PWS Tank Bottoms	Chloroform	180-6080-1	0.2	0.1	mg/L	U	0.2			Sioux Falls	2012
PWS Tank Bottoms	Chloroform	180-20714-1	0.2	0.1	mg/L	U	0.2			Salt Lake City	2013
PWS Tank Bottoms	Chloroform	180-21899-1	0.2	0.1	mg/L	U	0.2			Tulsa	2013
PWS Tank Bottoms	Chloroform	180-23127-1	0.2	0.1	mg/L	U	0.2			Wichita	2013
PWS Tank Bottoms	Chloroform	180-35833-1	0.2	0.1	mg/L	U	0.2			Dodge City	2014
PWS Tank Bottoms	Chloroform	180-32306-1	0.2	0.1	mg/L	U	0.2			Salt Lake City	2014
PWS Tank Bottoms	Chloroform	180-44034-1	0.2	0.1	mg/L	U	0.2			Boise	2015
PWS Tank Bottoms	Chloroform	180-43578-1	0.2	0.1	mg/L	U	0.2			Chandler	2015
PWS Tank Bottoms	Chloroform	180-43573-1	0.2	0.1	mg/L	U	0.2			Salt Lake City	2015
PWS Tank Bottoms	Chloroform	180-51960-1	0.2	0.1	mg/L	U	0.2			Farmington	2015
PWS Tank Bottoms	Chloroform	180-52526-1	0.2	0.1	mg/L	U H	0.2			Boise	2016
PWS Tank Bottoms	Chloroform	180-53484-1	0.2	0.1	mg/L	U	0.2			Chandler	2016
PWS Tank Bottoms	Chloroform	180-53880-1	0.2	0.1	mg/L	U	0.2			Omaha	2016
PWS Tank Bottoms	Chloroform	180-67590-2	0.2	0.1	mg/L	U	0.2	35	56	Boise	2017
PWS Tank Bottoms	Chloroform	180-65572-1	0.2	0.1	mg/L	U	0.2			Chandler	2017
PWS Tank Bottoms	Chloroform	180-68912-1	0.2	0.1	mg/L	U	0.2			Farmington	2017
PWS Tank Bottoms	Chloroform	180-65524-1	0.2	0.1	mg/L	U	0.2			Salt Lake City	2017
PWS Tank Bottoms	Chloroform	180-77050-1	0.2	0.1	mg/L	U	0.2			Boise	2018
PWS Tank Bottoms	Chloroform	180-80926-1	0.2	0.1	mg/L	U	0.2			Farmington	2018
PWS Tank Bottoms	Chloroform	180-82828-1	0.2	0.1	mg/L	U	0.2			Oklahoma City	2018
PWS Tank Bottoms	Chloroform	180-80846-1	0.2	0.1	mg/L	U	0.2			Sacramento	2018
PWS Tank Bottoms	Chloroform	180-77711-1	0.2	0.1	mg/L	U	0.2			Salt Lake City	2018
PWS Tank Bottoms	Chloroform	C8H250147001	1	0.5	mg/L	U	1			Blaine	2008
PWS Tank Bottoms	Chloroform	C8H250154001	1	0.5	mg/L	U	1			Blaine	2008
PWS Tank Bottoms	Chloroform	C8J030260001	1	0.5	mg/L	U	1			Eagan	2008
PWS Tank Bottoms	Chloroform	C8J030263001	1	0.5	mg/L	U	1			Eagan	2008
PWS Tank Bottoms	Chloroform	C9F060175001	1	0.5	mg/L	U	1			Wichita	2009
PWS Tank Bottoms	Chloroform	C0I090490001	1	0.5	mg/L	U	1			Santa Ana	2010
PWS Tank Bottoms	Chloroform	180-27070-1	1	0.5	mg/L	U	1			Sacramento	2013

PWS Tank Bottoms	Chloroform	180-32876-1	1	0.5	mg/L	U	1	Boise	2014
PWS Tank Bottoms	Chloroform	180-56702-1	1	0.5	mg/L	U	1	Farmington	2016
PWS Tank Bottoms	Chloroform	180-53843-1	1	0.5	mg/L	U	1	Salt Lake City	2016
PWS Tank Bottoms	Chloroform	180-74608-1	1	0.5	mg/L	U	1	Salisbury	2018
PWS Tank Bottoms	Chloroform	C0A200514001	2	1	mg/L	U	2	Sacramento	2010
PWS Tank Bottoms	Chloroform	180-604-11	2	1	mg/L	U	2	Salt Lake City	2011
PWS Tank Bottoms	Chromium	180-20714-1	0.015	0.015	mg/L	J B	0.05	Salt Lake City	2013
PWS Tank Bottoms	Chromium	180-35833-1	0.017	0.017	mg/L	J	0.5	Dodge City	2014
PWS Tank Bottoms	Chromium	180-32306-1	0.018	0.018	mg/L	J	0.5	Salt Lake City	2014
PWS Tank Bottoms	Chromium	180-43578-1	0.019	0.019	mg/L	J	0.5	Chandler	2015
PWS Tank Bottoms	Chromium	180-21899-1	0.021	0.021	mg/L	J B	0.05	Tulsa	2013
PWS Tank Bottoms	Chromium	180-10005-1	0.023	0.023	mg/L	J	0.05	Boise	2012
PWS Tank Bottoms	Chromium	180-10295-1	0.023	0.023	mg/L	J	0.25	Salt Lake City	2012
PWS Tank Bottoms	Chromium	180-65572-1	0.023	0.023	mg/L	J	0.5	Chandler	2017
PWS Tank Bottoms	Chromium	C9E130321001	0.05	0.025	mg/L	U	0.05	Chandler	2009
PWS Tank Bottoms	Chromium	C9K120427001	0.05	0.025	mg/L	U	0.05	Clackamas	2009
PWS Tank Bottoms	Chromium	C9H040289003	0.05	0.025	mg/L	U	0.05	Dodge City	2009
PWS Tank Bottoms	Chromium	C9E210290002	0.05	0.025	mg/L	U	0.05	Oklahoma City	2009
PWS Tank Bottoms	Chromium	C9H040288003	0.05	0.025	mg/L	U	0.05	Wichita	2009
PWS Tank Bottoms	Chromium	C0L080465001	0.05	0.025	mg/L	U	0.05	Clackamas	2010
PWS Tank Bottoms	Chromium	C0D220565001	0.05	0.025	mg/L	U	0.05	Salt Lake City	2010
PWS Tank Bottoms	Chromium	180-51960-1	0.05	0.025	mg/L	U	0.05	Farmington	2015
PWS Tank Bottoms	Chromium	180-53484-1	0.025	0.025	mg/L	J	0.5	Chandler	2016
PWS Tank Bottoms	Chromium	180-604-13	0.026	0.026	mg/L	J	0.05	Salt Lake City	2011
PWS Tank Bottoms	Chromium	180-52526-1	0.026	0.026	mg/L	J	0.5	Boise	2016
PWS Tank Bottoms	Chromium	180-43573-1	0.027	0.027	mg/L	J	0.5	Salt Lake City	2015
PWS Tank Bottoms	Chromium	180-53880-1	0.03	0.03	mg/L	J	0.5	Omaha	2016
PWS Tank Bottoms	Chromium	180-68912-1	0.03	0.03	mg/L	J	0.5	Farmington	2017
PWS Tank Bottoms	Chromium	180-80846-1	0.034	0.034	mg/L	J	0.5	Sacramento	2018
PWS Tank Bottoms	Chromium	180-2452-1	0.035	0.035	mg/L	J	0.05	Chandler	2011
PWS Tank Bottoms	Chromium	180-6080-1	0.038	0.038	mg/L	J	0.25	Sioux Falls	2012
PWS Tank Bottoms	Chromium	180-82828-1	0.039	0.039	mg/L	J	0.5	Oklahoma City	2018
PWS Tank Bottoms	Chromium	180-65524-1	0.041	0.041	mg/L	J	0.5	Salt Lake City	2017
PWS Tank Bottoms	Chromium	180-23127-1	0.046	0.046	mg/L	J B	0.05	Wichita	2013

PWS Tank Bottoms	Chromium	180-77711-1	0.047	0.047	mg/L	J	0.5			Salt Lake City	2018
PWS Tank Bottoms	Chromium	180-44034-1	0.048	0.048	mg/L	J	0.5			Boise	2015
PWS Tank Bottoms	Chromium	C0H100558001	0.1	0.05	mg/L	U	0.1			Boise	2010
PWS Tank Bottoms	Chromium	C9E090111001	0.052	0.052	mg/L		0.05			Boise	2009
PWS Tank Bottoms	Chromium	180-80926-1	0.058	0.058	mg/L	J	0.5			Farmington	2018
PWS Tank Bottoms	Chromium	C9D230261001	0.073	0.073	mg/L		0.05			Salt Lake City	2009
PWS Tank Bottoms	Chromium	C9I170278001	0.075	0.075	mg/L		0.05	35	56	Santa Ana	2009
PWS Tank Bottoms	Chromium	180-67590-2	0.076	0.076	mg/L	J	0.5			Boise	2017
PWS Tank Bottoms	Chromium	180-2334-1	0.08	0.08	mg/L	J	0.25			Boise	2011
PWS Tank Bottoms	Chromium	180-77050-1	0.091	0.091	mg/L	J	0.5			Boise	2018
PWS Tank Bottoms	Chromium	180-56702-1	0.1	0.1	mg/L	J B	0.5			Farmington	2016
PWS Tank Bottoms	Chromium	180-74608-1	0.12	0.12	mg/L	J B	0.5			Salisbury	2018
PWS Tank Bottoms	Chromium	180-2462-1	0.14	0.14	mg/L		0.05			Santa Ana	2011
PWS Tank Bottoms	Chromium	180-27070-1	0.16	0.16	mg/L	J	0.5			Sacramento	2013
PWS Tank Bottoms	Chromium	180-53843-1	0.18	0.18	mg/L	J	0.5			Salt Lake City	2016
PWS Tank Bottoms	Chromium	C8H250147001	0.5	0.25	mg/L	U	0.5			Blaine	2008
PWS Tank Bottoms	Chromium	C8H250154001	0.5	0.25	mg/L	U	0.5			Blaine	2008
PWS Tank Bottoms	Chromium	C8E200313001	0.5	0.25	mg/L	U	0.5			Boise	2008
PWS Tank Bottoms	Chromium	C8H200252001	0.5	0.25	mg/L	U	0.5			Dodge City	2008
PWS Tank Bottoms	Chromium	C8J030260001	0.5	0.25	mg/L	U	0.5			Eagan	2008
PWS Tank Bottoms	Chromium	C8J030263001	0.5	0.25	mg/L	U	0.5			Eagan	2008
PWS Tank Bottoms	Chromium	C8F130326001	0.5	0.25	mg/L	U	0.5			Fargo	2008
PWS Tank Bottoms	Chromium	C8D030320001	0.5	0.25	mg/L	U	0.5			Salt Lake City	2008
PWS Tank Bottoms	Chromium	C8H080290001	0.5	0.25	mg/L	U	0.5			Wichita	2008
PWS Tank Bottoms	Chromium	C9F060175001	0.5	0.25	mg/L	U	0.5			Wichita	2009
PWS Tank Bottoms	Chromium	180-32876-1	0.36	0.36	mg/L	J	0.5			Boise	2014
PWS Tank Bottoms	Chromium	C0I090490001	0.75	0.75	mg/L		0.5			Santa Ana	2010
PWS Tank Bottoms	Chromium	C0A200514001	0.78	0.78	mg/L		0.5			Sacramento	2010
PWS Tank Bottoms	Flashpoint	C9H040288001	>200	>200	Degrees F					Wichita	2009
PWS Tank Bottoms	Flashpoint	C0H100558001	>200	>200	Degrees F					Boise	2010
PWS Tank Bottoms	Flashpoint	C0D220565001	>200	>200	Degrees F					Salt Lake City	2010
PWS Tank Bottoms	Flashpoint	180-2334-1	>140	>140	Degrees F					Boise	2011
PWS Tank Bottoms	Flashpoint	180-2452-1	>140	>140	Degrees F					Chandler	2011
PWS Tank Bottoms	Flashpoint	180-604-11	>140	>140	Degrees F			32	51	Salt Lake City	2011

PWS Tank Bottoms	Flashpoint	180-2462-1	>140	>140	Degrees F		Santa Ana	2011
PWS Tank Bottoms	Flashpoint	180-6080-1	>140	>140	Degrees F		Sioux Falls	2012
PWS Tank Bottoms	Flashpoint	180-20714-1	>140	>140	Degrees F		Salt Lake City	2013
PWS Tank Bottoms	Flashpoint	180-21899-1	>140	>140	Degrees F		Tulsa	2013
PWS Tank Bottoms	Flashpoint	180-23127-1	>140	>140	Degrees F		Wichita	2013
PWS Tank Bottoms	Flashpoint	180-35833-1	>140	>140	Degrees F		Dodge City	2014
PWS Tank Bottoms	Flashpoint	180-32306-1	>140	>140	Degrees F		Salt Lake City	2014
PWS Tank Bottoms	Flashpoint	180-44034-1	>140	>140	Degrees F		Boise	2015
PWS Tank Bottoms	Flashpoint	180-43578-1	>140	>140	Degrees F		Chandler	2015
PWS Tank Bottoms	Flashpoint	180-43573-1	>140	>140	Degrees F		Salt Lake City	2015
PWS Tank Bottoms	Flashpoint	180-52526-1	>140	>140	Degrees F		Boise	2016
PWS Tank Bottoms	Flashpoint	180-53484-1	>140	>140	Degrees F		Chandler	2016
PWS Tank Bottoms	Flashpoint	180-53880-1	>140	>140	Degrees F		Omaha	2016
PWS Tank Bottoms	Flashpoint	180-65572-1	>140	>140	Degrees F		Chandler	2017
PWS Tank Bottoms	Flashpoint	180-68912-1	>140	>140	Degrees F		Farmington	2017
PWS Tank Bottoms	Flashpoint	180-65524-1	>140	>140	Degrees F		Salt Lake City	2017
PWS Tank Bottoms	Flashpoint	180-56702-1	156	156	Degrees F	1	Farmington	2016
PWS Tank Bottoms	Flashpoint	180-51960-1	154	154	Degrees F	1	Farmington	2015
PWS Tank Bottoms	Flashpoint	C9F060175001	153	153	Degrees F		Wichita	2009
PWS Tank Bottoms	Flashpoint	C0I090490001	150	150	Degrees F		Santa Ana	2010
PWS Tank Bottoms	Flashpoint	180-74608-1	150	150	Degrees F	1	Salisbury	2018
PWS Tank Bottoms	Flashpoint	180-32876-1	147	147	Degrees F		Boise	2014
PWS Tank Bottoms	Flashpoint	C8H250147001	145	145	Degrees F		Blaine	2008
PWS Tank Bottoms	Flashpoint	180-53843-1	145	145	Degrees F	1	Salt Lake City	2016
PWS Tank Bottoms	Flashpoint	C8H250154001	143	143	Degrees F		Blaine	2008
PWS Tank Bottoms	Flashpoint	C8E200313001	141	141	Degrees F		Boise	2008
PWS Tank Bottoms	Flashpoint	C8H200252001	141	141	Degrees F		Dodge City	2008
PWS Tank Bottoms	Flashpoint	C8F130326001	141	141	Degrees F		Fargo	2008
PWS Tank Bottoms	Flashpoint	C8H080290001	141	141	Degrees F		Wichita	2008
PWS Tank Bottoms	Flashpoint	C9E090111001	141	141	Degrees F		Boise	2009
PWS Tank Bottoms	Flashpoint	C9E130321001	141	141	Degrees F		Chandler	2009
PWS Tank Bottoms	Flashpoint	C9E210290002	141	141	Degrees F		Oklahoma City	2009
PWS Tank Bottoms	Flashpoint	C9D230261001	141	141	Degrees F		Salt Lake City	2009
PWS Tank Bottoms	Flashpoint	C9I170278001	141	141	Degrees F		Santa Ana	2009

PWS Tank Bottoms	Flashpoint	C0L080465001	141	141	Degrees F			Clackamas	2010
PWS Tank Bottoms	Flashpoint	180-10005-1	141	141	Degrees F			Boise	2012
PWS Tank Bottoms	Flashpoint	180-10295-1	141	141	Degrees F			Salt Lake City	2012
PWS Tank Bottoms	Flashpoint	C8J030263001	138	138	Degrees F			Eagan	2008
PWS Tank Bottoms	Flashpoint	180-27070-1	137	137	Degrees F			Sacramento	2013
PWS Tank Bottoms	Flashpoint	180-67590-1	135	135	Degrees F		1	Boise	2017
PWS Tank Bottoms	Flashpoint	C8J030260001	126	126	Degrees F			Eagan	2008
PWS Tank Bottoms	Flashpoint	C0A200514001	114	114	Degrees F			Sacramento	2010
PWS Tank Bottoms	Flashpoint	C8D030320001	94.6	94.6	Degrees F			Salt Lake City	2008
PWS Tank Bottoms	Flashpoint	C9H040289001	94.5	94.5	Degrees F			Dodge City	2009
PWS Tank Bottoms	Flashpoint	C9K120427001	92.3	92.3	Degrees F			Clackamas	2009
PWS Tank Bottoms	Hexachlorobenzene	C8H200252001	0.05	0.025	mg/L	U	0.05	Dodge City	2008
PWS Tank Bottoms	Hexachlorobenzene	C8F130326001	0.05	0.025	mg/L	U	0.05	Fargo	2008
PWS Tank Bottoms	Hexachlorobenzene	C8D030320001	0.05	0.025	mg/L	U	0.05	Salt Lake City	2008
PWS Tank Bottoms	Hexachlorobenzene	C8H080290001	0.05	0.025	mg/L	U	0.05	Wichita	2008
PWS Tank Bottoms	Hexachlorobenzene	C9E090111001	0.05	0.025	mg/L	U	0.05	Boise	2009
PWS Tank Bottoms	Hexachlorobenzene	C9E130321001	0.05	0.025	mg/L	U	0.05	Chandler	2009
PWS Tank Bottoms	Hexachlorobenzene	C9H040289003	0.05	0.025	mg/L	U	0.05	Dodge City	2009
PWS Tank Bottoms	Hexachlorobenzene	C9E210290002	0.05	0.025	mg/L	U	0.05	Oklahoma City	2009
PWS Tank Bottoms	Hexachlorobenzene	C9D230261001	0.05	0.025	mg/L	U	0.05	Salt Lake City	2009
PWS Tank Bottoms	Hexachlorobenzene	C9H040288003	0.05	0.025	mg/L	U	0.05	Wichita	2009
PWS Tank Bottoms	Hexachlorobenzene	C0H100558001	0.05	0.025	mg/L	U	0.05	Boise	2010
PWS Tank Bottoms	Hexachlorobenzene	C0L080465001	0.05	0.025	mg/L	U	0.05	Clackamas	2010
PWS Tank Bottoms	Hexachlorobenzene	C0D220565001	0.05	0.025	mg/L	U	0.05	Salt Lake City	2010
PWS Tank Bottoms	Hexachlorobenzene	180-2334-1	0.05	0.025	mg/L	U	0.05	Boise	2011
PWS Tank Bottoms	Hexachlorobenzene	180-2452-1	0.05	0.025	mg/L	U	0.05	Chandler	2011
PWS Tank Bottoms	Hexachlorobenzene	180-604-13	0.05	0.025	mg/L	U	0.05	Salt Lake City	2011
PWS Tank Bottoms	Hexachlorobenzene	180-10005-1	0.05	0.025	mg/L	U	0.05	Boise	2012
PWS Tank Bottoms	Hexachlorobenzene	180-10295-1	0.05	0.025	mg/L	U	0.05	Salt Lake City	2012
PWS Tank Bottoms	Hexachlorobenzene	180-6080-1	0.05	0.025	mg/L	U	0.05	Sioux Falls	2012
PWS Tank Bottoms	Hexachlorobenzene	180-20714-1	0.05	0.025	mg/L	U	0.05	Salt Lake City	2013
PWS Tank Bottoms	Hexachlorobenzene	180-21899-1	0.05	0.025	mg/L	U	0.05	Tulsa	2013
PWS Tank Bottoms	Hexachlorobenzene	180-23127-1	0.05	0.025	mg/L	U	0.05	Wichita	2013
PWS Tank Bottoms	Hexachlorobenzene	180-35833-1	0.05	0.025	mg/L	U	0.05	Dodge City	2014

PWS Tank Bottoms	Hexachlorobenzene	180-32306-1	0.05	0.025	mg/L	U	0.05			Salt Lake City	2014
PWS Tank Bottoms	Hexachlorobenzene	180-44034-1	0.05	0.025	mg/L	U	0.05			Boise	2015
PWS Tank Bottoms	Hexachlorobenzene	180-43578-1	0.05	0.025	mg/L	U	0.05			Chandler	2015
PWS Tank Bottoms	Hexachlorobenzene	180-43573-1	0.05	0.025	mg/L	U	0.05			Salt Lake City	2015
PWS Tank Bottoms	Hexachlorobenzene	180-52526-1	0.05	0.025	mg/L	U H	0.05			Boise	2016
PWS Tank Bottoms	Hexachlorobenzene	180-53484-1	0.05	0.025	mg/L	U	0.05			Chandler	2016
PWS Tank Bottoms	Hexachlorobenzene	180-53880-1	0.05	0.025	mg/L	U	0.05			Omaha	2016
PWS Tank Bottoms	Hexachlorobenzene	180-67590-2	0.05	0.025	mg/L	U	0.05			Boise	2017
PWS Tank Bottoms	Hexachlorobenzene	180-65572-1	0.05	0.025	mg/L	U	0.05	32	51	Chandler	2017
PWS Tank Bottoms	Hexachlorobenzene	180-68912-1	0.05	0.025	mg/L	U	0.05			Farmington	2017
PWS Tank Bottoms	Hexachlorobenzene	180-65524-1	0.05	0.025	mg/L	U	0.05			Salt Lake City	2017
PWS Tank Bottoms	Hexachlorobenzene	180-77050-1	0.05	0.025	mg/L	U	0.05			Boise	2018
PWS Tank Bottoms	Hexachlorobenzene	180-80926-1	0.05	0.025	mg/L	U	0.05			Farmington	2018
PWS Tank Bottoms	Hexachlorobenzene	180-82828-1	0.05	0.025	mg/L	U	0.05			Oklahoma City	2018
PWS Tank Bottoms	Hexachlorobenzene	180-80846-1	0.05	0.025	mg/L	U	0.05			Sacramento	2018
PWS Tank Bottoms	Hexachlorobenzene	180-77711-1	0.05	0.025	mg/L	U	0.05			Salt Lake City	2018
PWS Tank Bottoms	Hexachlorobenzene	C9K120427001	0.1	0.05	mg/L	U	0.1			Clackamas	2009
PWS Tank Bottoms	Hexachlorobenzene	C8H250147001	0.13	0.065	mg/L	U	0.13			Blaine	2008
PWS Tank Bottoms	Hexachlorobenzene	C8H250154001	0.13	0.065	mg/L	U	0.13			Blaine	2008
PWS Tank Bottoms	Hexachlorobenzene	C8J030260001	0.13	0.065	mg/L	U	0.13			Eagan	2008
PWS Tank Bottoms	Hexachlorobenzene	C8J030263001	0.13	0.065	mg/L	U	0.13			Eagan	2008
PWS Tank Bottoms	Hexachlorobenzene	C9F060175001	0.13	0.065	mg/L	U	0.13			Wichita	2009
PWS Tank Bottoms	Hexachlorobenzene	180-32876-1	0.13	0.065	mg/L	U	0.13			Boise	2014
PWS Tank Bottoms	Hexachlorobenzene	180-51960-2	0.13	0.065	mg/L	U	0.13			Farmington	2015
PWS Tank Bottoms	Hexachlorobenzene	180-56702-1	0.13	0.065	mg/L	U	0.13			Farmington	2016
PWS Tank Bottoms	Hexachlorobenzene	180-53843-1	0.13	0.065	mg/L	U	0.13			Salt Lake City	2016
PWS Tank Bottoms	Hexachlorobenzene	180-74608-1	0.13	0.065	mg/L	U *	0.13			Salisbury	2018
PWS Tank Bottoms	Hexachlorobenzene	C8E200313001	0.75	0.375	mg/L	U	0.75			Boise	2008
PWS Tank Bottoms	Hexachlorobutadiene	C8H200252001	0.05	0.025	mg/L	U	0.05			Dodge City	2008
PWS Tank Bottoms	Hexachlorobutadiene	C8F130326001	0.05	0.025	mg/L	U	0.05			Fargo	2008
PWS Tank Bottoms	Hexachlorobutadiene	C8D030320001	0.05	0.025	mg/L	U	0.05			Salt Lake City	2008
PWS Tank Bottoms	Hexachlorobutadiene	C8H080290001	0.05	0.025	mg/L	U	0.05			Wichita	2008
PWS Tank Bottoms	Hexachlorobutadiene	C9E090111001	0.05	0.025	mg/L	U	0.05			Boise	2009
PWS Tank Bottoms	Hexachlorobutadiene	C9E130321001	0.05	0.025	mg/L	U	0.05			Chandler	2009

PWS Tank Bottoms	Hexachlorobutadiene	C9H040289003	0.05	0.025	mg/L	U	0.05			Dodge City	2009
PWS Tank Bottoms	Hexachlorobutadiene	C9E210290002	0.05	0.025	mg/L	U	0.05			Oklahoma City	2009
PWS Tank Bottoms	Hexachlorobutadiene	C9D230261001	0.05	0.025	mg/L	U	0.05			Salt Lake City	2009
PWS Tank Bottoms	Hexachlorobutadiene	C9H040288003	0.05	0.025	mg/L	U	0.05			Wichita	2009
PWS Tank Bottoms	Hexachlorobutadiene	C0H100558001	0.05	0.025	mg/L	U	0.05			Boise	2010
PWS Tank Bottoms	Hexachlorobutadiene	C0L080465001	0.05	0.025	mg/L	U	0.05			Clackamas	2010
PWS Tank Bottoms	Hexachlorobutadiene	C0D220565001	0.05	0.025	mg/L	U	0.05			Salt Lake City	2010
PWS Tank Bottoms	Hexachlorobutadiene	180-2334-1	0.05	0.025	mg/L	U	0.05			Boise	2011
PWS Tank Bottoms	Hexachlorobutadiene	180-2452-1	0.05	0.025	mg/L	U	0.05			Chandler	2011
PWS Tank Bottoms	Hexachlorobutadiene	180-604-13	0.05	0.025	mg/L	U	0.05			Salt Lake City	2011
PWS Tank Bottoms	Hexachlorobutadiene	180-10005-1	0.05	0.025	mg/L	U	0.05			Boise	2012
PWS Tank Bottoms	Hexachlorobutadiene	180-10295-1	0.05	0.025	mg/L	U	0.05			Salt Lake City	2012
PWS Tank Bottoms	Hexachlorobutadiene	180-6080-1	0.05	0.025	mg/L	U	0.05			Sioux Falls	2012
PWS Tank Bottoms	Hexachlorobutadiene	180-20714-1	0.05	0.025	mg/L	U	0.05			Salt Lake City	2013
PWS Tank Bottoms	Hexachlorobutadiene	180-21899-1	0.05	0.025	mg/L	U	0.05			Tulsa	2013
PWS Tank Bottoms	Hexachlorobutadiene	180-23127-1	0.05	0.025	mg/L	U	0.05			Wichita	2013
PWS Tank Bottoms	Hexachlorobutadiene	180-35833-1	0.05	0.025	mg/L	U	0.05			Dodge City	2014
PWS Tank Bottoms	Hexachlorobutadiene	180-32306-1	0.05	0.025	mg/L	U	0.05			Salt Lake City	2014
PWS Tank Bottoms	Hexachlorobutadiene	180-44034-1	0.05	0.025	mg/L	U	0.05			Boise	2015
PWS Tank Bottoms	Hexachlorobutadiene	180-43578-1	0.05	0.025	mg/L	U	0.05			Chandler	2015
PWS Tank Bottoms	Hexachlorobutadiene	180-43573-1	0.05	0.025	mg/L	U	0.05			Salt Lake City	2015
PWS Tank Bottoms	Hexachlorobutadiene	180-52526-1	0.05	0.025	mg/L	U H	0.05			Boise	2016
PWS Tank Bottoms	Hexachlorobutadiene	180-53484-1	0.05	0.025	mg/L	U	0.05			Chandler	2016
PWS Tank Bottoms	Hexachlorobutadiene	180-53880-1	0.05	0.025	mg/L	U	0.05			Omaha	2016
PWS Tank Bottoms	Hexachlorobutadiene	180-67590-2	0.05	0.025	mg/L	U	0.05			Boise	2017
PWS Tank Bottoms	Hexachlorobutadiene	180-65572-1	0.05	0.025	mg/L	U	0.05	32	51	Chandler	2017
PWS Tank Bottoms	Hexachlorobutadiene	180-68912-1	0.05	0.025	mg/L	U	0.05			Farmington	2017
PWS Tank Bottoms	Hexachlorobutadiene	180-65524-1	0.05	0.025	mg/L	U	0.05			Salt Lake City	2017
PWS Tank Bottoms	Hexachlorobutadiene	180-77050-1	0.05	0.025	mg/L	U	0.05			Boise	2018
PWS Tank Bottoms	Hexachlorobutadiene	180-80926-1	0.05	0.025	mg/L	U	0.05			Farmington	2018
PWS Tank Bottoms	Hexachlorobutadiene	180-82828-1	0.05	0.025	mg/L	U	0.05			Oklahoma City	2018
PWS Tank Bottoms	Hexachlorobutadiene	180-80846-1	0.05	0.025	mg/L	U	0.05			Sacramento	2018
PWS Tank Bottoms	Hexachlorobutadiene	180-77711-1	0.05	0.025	mg/L	U	0.05			Salt Lake City	2018
PWS Tank Bottoms	Hexachlorobutadiene	C9K120427001	0.1	0.05	mg/L	U	0.1			Clackamas	2009

PWS Tank Bottoms	Hexachlorobutadiene	180-32876-1	0.13	0.065	mg/L	U	0.13	Boise	2014
PWS Tank Bottoms	Hexachlorobutadiene	180-51960-2	0.13	0.065	mg/L	U	0.13	Farmington	2015
PWS Tank Bottoms	Hexachlorobutadiene	180-56702-1	0.13	0.065	mg/L	U	0.13	Farmington	2016
PWS Tank Bottoms	Hexachlorobutadiene	180-53843-1	0.13	0.065	mg/L	U	0.13	Salt Lake City	2016
PWS Tank Bottoms	Hexachlorobutadiene	180-74608-1	0.13	0.065	mg/L	U *	0.13	Salisbury	2018
PWS Tank Bottoms	Hexachlorobutadiene	C8H250147001	0.5	0.25	mg/L	U	0.5	Blaine	2008
PWS Tank Bottoms	Hexachlorobutadiene	C8H250154001	0.5	0.25	mg/L	U	0.5	Blaine	2008
PWS Tank Bottoms	Hexachlorobutadiene	C8J030260001	0.5	0.25	mg/L	U	0.5	Eagan	2008
PWS Tank Bottoms	Hexachlorobutadiene	C8J030263001	0.5	0.25	mg/L	U	0.5	Eagan	2008
PWS Tank Bottoms	Hexachlorobutadiene	C9F060175001	0.5	0.25	mg/L	U	0.5	Wichita	2009
PWS Tank Bottoms	Hexachlorobutadiene	C8E200313001	0.75	0.375	mg/L	U	0.75	Boise	2008
PWS Tank Bottoms	Hexachloroethane	C8H200252001	0.05	0.025	mg/L	U	0.05	Dodge City	2008
PWS Tank Bottoms	Hexachloroethane	C8F130326001	0.05	0.025	mg/L	U	0.05	Fargo	2008
PWS Tank Bottoms	Hexachloroethane	C8D030320001	0.05	0.025	mg/L	U	0.05	Salt Lake City	2008
PWS Tank Bottoms	Hexachloroethane	C8H080290001	0.05	0.025	mg/L	U	0.05	Wichita	2008
PWS Tank Bottoms	Hexachloroethane	C9E090111001	0.05	0.025	mg/L	U	0.05	Boise	2009
PWS Tank Bottoms	Hexachloroethane	C9E130321001	0.05	0.025	mg/L	U	0.05	Chandler	2009
PWS Tank Bottoms	Hexachloroethane	C9H040289003	0.05	0.025	mg/L	U	0.05	Dodge City	2009
PWS Tank Bottoms	Hexachloroethane	C9E210290002	0.05	0.025	mg/L	U	0.05	Oklahoma City	2009
PWS Tank Bottoms	Hexachloroethane	C9D230261001	0.05	0.025	mg/L	U	0.05	Salt Lake City	2009
PWS Tank Bottoms	Hexachloroethane	C9H040288003	0.05	0.025	mg/L	U	0.05	Wichita	2009
PWS Tank Bottoms	Hexachloroethane	C0H100558001	0.05	0.025	mg/L	U	0.05	Boise	2010
PWS Tank Bottoms	Hexachloroethane	C0L080465001	0.05	0.025	mg/L	U	0.05	Clackamas	2010
PWS Tank Bottoms	Hexachloroethane	C0D220565001	0.05	0.025	mg/L	U	0.05	Salt Lake City	2010
PWS Tank Bottoms	Hexachloroethane	180-2334-1	0.05	0.025	mg/L	U	0.05	Boise	2011
PWS Tank Bottoms	Hexachloroethane	180-2452-1	0.05	0.025	mg/L	U	0.05	Chandler	2011
PWS Tank Bottoms	Hexachloroethane	180-604-13	0.05	0.025	mg/L	U	0.05	Salt Lake City	2011
PWS Tank Bottoms	Hexachloroethane	180-10005-1	0.05	0.025	mg/L	U	0.05	Boise	2012
PWS Tank Bottoms	Hexachloroethane	180-10295-1	0.05	0.025	mg/L	U	0.05	Salt Lake City	2012
PWS Tank Bottoms	Hexachloroethane	180-6080-1	0.05	0.025	mg/L	U	0.05	Sioux Falls	2012
PWS Tank Bottoms	Hexachloroethane	180-20714-1	0.05	0.025	mg/L	U	0.05	Salt Lake City	2013
PWS Tank Bottoms	Hexachloroethane	180-21899-1	0.05	0.025	mg/L	U	0.05	Tulsa	2013
PWS Tank Bottoms	Hexachloroethane	180-23127-1	0.05	0.025	mg/L	U	0.05	Wichita	2013
PWS Tank Bottoms	Hexachloroethane	180-35833-1	0.05	0.025	mg/L	U	0.05	Dodge City	2014

PWS Tank Bottoms	Hexachloroethane	180-32306-1	0.05	0.025	mg/L	U	0.05			Salt Lake City	2014
PWS Tank Bottoms	Hexachloroethane	180-44034-1	0.05	0.025	mg/L	U	0.05			Boise	2015
PWS Tank Bottoms	Hexachloroethane	180-43578-1	0.05	0.025	mg/L	U	0.05			Chandler	2015
PWS Tank Bottoms	Hexachloroethane	180-43573-1	0.05	0.025	mg/L	U	0.05			Salt Lake City	2015
PWS Tank Bottoms	Hexachloroethane	180-52526-1	0.05	0.025	mg/L	U H	0.05			Boise	2016
PWS Tank Bottoms	Hexachloroethane	180-53484-1	0.05	0.025	mg/L	U	0.05			Chandler	2016
PWS Tank Bottoms	Hexachloroethane	180-53880-1	0.05	0.025	mg/L	U	0.05			Omaha	2016
PWS Tank Bottoms	Hexachloroethane	180-67590-2	0.05	0.025	mg/L	U	0.05			Boise	2017
PWS Tank Bottoms	Hexachloroethane	180-65572-1	0.05	0.025	mg/L	U	0.05	32	51	Chandler	2017
PWS Tank Bottoms	Hexachloroethane	180-68912-1	0.05	0.025	mg/L	U	0.05			Farmington	2017
PWS Tank Bottoms	Hexachloroethane	180-65524-1	0.05	0.025	mg/L	U	0.05			Salt Lake City	2017
PWS Tank Bottoms	Hexachloroethane	180-77050-1	0.05	0.025	mg/L	U	0.05			Boise	2018
PWS Tank Bottoms	Hexachloroethane	180-80926-1	0.05	0.025	mg/L	U	0.05			Farmington	2018
PWS Tank Bottoms	Hexachloroethane	180-82828-1	0.05	0.025	mg/L	U	0.05			Oklahoma City	2018
PWS Tank Bottoms	Hexachloroethane	180-80846-1	0.05	0.025	mg/L	U	0.05			Sacramento	2018
PWS Tank Bottoms	Hexachloroethane	180-77711-1	0.05	0.025	mg/L	U	0.05			Salt Lake City	2018
PWS Tank Bottoms	Hexachloroethane	C9K120427001	0.1	0.05	mg/L	U	0.1			Clackamas	2009
PWS Tank Bottoms	Hexachloroethane	180-32876-1	0.13	0.065	mg/L	U	0.13			Boise	2014
PWS Tank Bottoms	Hexachloroethane	180-51960-2	0.13	0.065	mg/L	U	0.13			Farmington	2015
PWS Tank Bottoms	Hexachloroethane	180-56702-1	0.13	0.065	mg/L	U	0.13			Farmington	2016
PWS Tank Bottoms	Hexachloroethane	180-53843-1	0.13	0.065	mg/L	U	0.13			Salt Lake City	2016
PWS Tank Bottoms	Hexachloroethane	180-74608-1	0.13	0.065	mg/L	U *	0.13			Salisbury	2018
PWS Tank Bottoms	Hexachloroethane	C8E200313001	0.75	0.375	mg/L	U	0.75			Boise	2008
PWS Tank Bottoms	Hexachloroethane	C8H250147001	3	1.5	mg/L	U	3			Blaine	2008
PWS Tank Bottoms	Hexachloroethane	C8H250154001	3	1.5	mg/L	U	3			Blaine	2008
PWS Tank Bottoms	Hexachloroethane	C8J030260001	3	1.5	mg/L	U	3			Eagan	2008
PWS Tank Bottoms	Hexachloroethane	C8J030263001	3	1.5	mg/L	U	3			Eagan	2008
PWS Tank Bottoms	Hexachloroethane	C9F060175001	3	1.5	mg/L	U	3			Wichita	2009
PWS Tank Bottoms	Ignitability	180-77050-1	>140	>140	Degrees F					Boise	2018
PWS Tank Bottoms	Ignitability	180-80926-1	>140	>140	Degrees F					Farmington	2018
PWS Tank Bottoms	Ignitability	180-82828-1	>140	>140	Degrees F					Oklahoma City	2018
PWS Tank Bottoms	Ignitability	180-80846-1	>140	>140	Degrees F					Sacramento	2018
PWS Tank Bottoms	Ignitability	180-77711-1	>140	>140	Degrees F					Salt Lake City	2018
PWS Tank Bottoms	Lead	C0H100558001	0.1	0.05	mg/L	U	0.1			Boise	2010

PWS Tank Bottoms	Lead	180-51960-1	0.1	0.05	mg/L	U	0.1			Farmington	2015
PWS Tank Bottoms	Lead	180-67590-2	0.077	0.077	mg/L	J	0.5			Boise	2017
PWS Tank Bottoms	Lead	180-43573-1	0.15	0.15	mg/L	J	0.5			Salt Lake City	2015
PWS Tank Bottoms	Lead	180-65572-1	0.15	0.15	mg/L	J	0.5			Chandler	2017
PWS Tank Bottoms	Lead	180-65524-1	0.18	0.18	mg/L	J	0.5			Salt Lake City	2017
PWS Tank Bottoms	Lead	180-2334-1	0.23	0.23	mg/L	J	0.25			Boise	2011
PWS Tank Bottoms	Lead	180-52526-1	0.23	0.23	mg/L	J	0.5			Boise	2016
PWS Tank Bottoms	Lead	C8E200313001	0.5	0.25	mg/L	U	0.5			Boise	2008
PWS Tank Bottoms	Lead	C8H080290001	0.5	0.25	mg/L	U	0.5			Wichita	2008
PWS Tank Bottoms	Lead	180-6080-1	0.25	0.25	mg/L		0.25			Sioux Falls	2012
PWS Tank Bottoms	Lead	180-77711-1	0.27	0.27	mg/L	J	0.5			Salt Lake City	2018
PWS Tank Bottoms	Lead	180-44034-1	0.29	0.29	mg/L	J	0.5			Boise	2015
PWS Tank Bottoms	Lead	180-2462-1	0.33	0.33	mg/L		0.05			Santa Ana	2011
PWS Tank Bottoms	Lead	180-53484-1	0.33	0.33	mg/L	J	0.5			Chandler	2016
PWS Tank Bottoms	Lead	180-23127-1	0.35	0.35	mg/L		0.05			Wichita	2013
PWS Tank Bottoms	Lead	C9E090111001	0.39	0.39	mg/L		0.05			Boise	2009
PWS Tank Bottoms	Lead	C9H040289003	0.42	0.42	mg/L		0.05			Dodge City	2009
PWS Tank Bottoms	Lead	180-74608-1	0.43	0.43	mg/L	J	1			Salisbury	2018
PWS Tank Bottoms	Lead	180-80846-1	0.44	0.44	mg/L	J	0.5			Sacramento	2018
PWS Tank Bottoms	Lead	180-56702-1	1	0.5	mg/L	U	1			Farmington	2016
PWS Tank Bottoms	Lead	180-77050-1	0.53	0.53	mg/L		0.5			Boise	2018
PWS Tank Bottoms	Lead	C9H040288003	0.55	0.55	mg/L		0.05			Wichita	2009
PWS Tank Bottoms	Lead	180-80926-1	0.58	0.58	mg/L		0.5			Farmington	2018
PWS Tank Bottoms	Lead	180-35833-1	0.61	0.61	mg/L		0.5			Dodge City	2014
PWS Tank Bottoms	Lead	180-2452-1	0.64	0.64	mg/L		0.05			Chandler	2011
PWS Tank Bottoms	Lead	C8H200252001	0.68	0.68	mg/L		0.5			Dodge City	2008
PWS Tank Bottoms	Lead	C8F130326001	0.68	0.68	mg/L		0.5			Fargo	2008
PWS Tank Bottoms	Lead	C9K120427001	0.72	0.72	mg/L		0.05			Clackamas	2009
PWS Tank Bottoms	Lead	C9E210290002	0.73	0.73	mg/L		0.05			Oklahoma City	2009
PWS Tank Bottoms	Lead	180-32306-1	0.8	0.8	mg/L	B	0.5			Salt Lake City	2014
PWS Tank Bottoms	Lead	C0L080465001	0.85	0.85	mg/L		0.05			Clackamas	2010
PWS Tank Bottoms	Lead	180-10295-1	0.87	0.87	mg/L		0.25			Salt Lake City	2012
PWS Tank Bottoms	Lead	180-43578-1	0.93	0.93	mg/L		0.5			Chandler	2015
PWS Tank Bottoms	Lead	180-604-13	0.94	0.94	mg/L		0.05	35	56	Salt Lake City	2011

PWS Tank Bottoms	Lead	C9F060175001	1.1	1.1	mg/L		0.3	Wichita	2009
PWS Tank Bottoms	Lead	180-20714-1	1.2	1.2	mg/L		0.05	Salt Lake City	2013
PWS Tank Bottoms	Lead	C9E130321001	1.3	1.3	mg/L		0.05	Chandler	2009
PWS Tank Bottoms	Lead	180-82828-1	1.3	1.3	mg/L		0.5	Oklahoma City	2018
PWS Tank Bottoms	Lead	180-21899-1	1.5	1.5	mg/L		0.05	Tulsa	2013
PWS Tank Bottoms	Lead	C8J030260001	1.6	1.6	mg/L		0.3	Eagan	2008
PWS Tank Bottoms	Lead	C9I170278001	1.6	1.6	mg/L		0.05	Santa Ana	2009
PWS Tank Bottoms	Lead	C0D220565001	1.9	1.9	mg/L		0.05	Salt Lake City	2010
PWS Tank Bottoms	Lead	180-53843-1	1.9	1.9	mg/L		1	Salt Lake City	2016
PWS Tank Bottoms	Lead	180-10005-1	2.4	2.4	mg/L		0.05	Boise	2012
PWS Tank Bottoms	Lead	180-27070-1	2.6	2.6	mg/L	B	1	Sacramento	2013
PWS Tank Bottoms	Lead	180-32876-1	3	3	mg/L		1	Boise	2014
PWS Tank Bottoms	Lead	C8J030263001	3.2	3.2	mg/L		0.3	Eagan	2008
PWS Tank Bottoms	Lead	C9D230261001	3.3	3.3	mg/L		0.05	Salt Lake City	2009
PWS Tank Bottoms	Lead	180-68912-1	3.7	3.7	mg/L		0.5	Farmington	2017
PWS Tank Bottoms	Lead	C0I090490001	4.1	4.1	mg/L		0.3	Santa Ana	2010
PWS Tank Bottoms	Lead	C8D030320001	5.1	5.1	mg/L		0.5	Salt Lake City	2008
PWS Tank Bottoms	Lead	C0A200514001	18.6	18.6	mg/L		0.3	Sacramento	2010
PWS Tank Bottoms	Lead	C8H250154001	20.2	20.2	mg/L		0.3	Blaine	2008
PWS Tank Bottoms	Lead	C8H250147001	20.6	20.6	mg/L		0.3	Blaine	2008
PWS Tank Bottoms	Lead	180-53880-1	32	32	mg/L		0.5	Omaha	2016
PWS Tank Bottoms	Mercury	180-52526-1	0.00007	0.00007	mg/L	J	0.0002	Boise	2016
PWS Tank Bottoms	Mercury	180-53484-1	0.000082	0.000082	mg/L	J B	0.0002	Chandler	2016
PWS Tank Bottoms	Mercury	180-67590-2	0.000085	0.000085	mg/L	J	0.0002	Boise	2017
PWS Tank Bottoms	Mercury	180-23127-1	0.000092	0.000092	mg/L	J	0.0002	Wichita	2013
PWS Tank Bottoms	Mercury	180-53880-1	0.000097	0.000097	mg/L	J	0.0002	Omaha	2016
PWS Tank Bottoms	Mercury	C8H200252001	0.0002	0.0001	mg/L	U	0.0002	Dodge City	2008
PWS Tank Bottoms	Mercury	C8H080290001	0.0002	0.0001	mg/L	U	0.0002	Wichita	2008
PWS Tank Bottoms	Mercury	C9H040289003	0.0002	0.0001	mg/L	U	0.0002	Dodge City	2009
PWS Tank Bottoms	Mercury	C9E210290002	0.0002	0.0001	mg/L	U	0.0002	Oklahoma City	2009
PWS Tank Bottoms	Mercury	C9H040288003	0.0002	0.0001	mg/L	U	0.0002	Wichita	2009
PWS Tank Bottoms	Mercury	C0H100558001	0.0002	0.0001	mg/L	U	0.0002	Boise	2010
PWS Tank Bottoms	Mercury	180-2334-1	0.0002	0.0001	mg/L	U	0.0002	Boise	2011
PWS Tank Bottoms	Mercury	180-2462-1	0.0001	0.0001	mg/L	J	0.0002	Santa Ana	2011

PWS Tank Bottoms	Mercury	180-6080-1	0.0002	0.0001	mg/L	U	0.0002			Sioux Falls	2012
PWS Tank Bottoms	Mercury	180-35833-1	0.0002	0.0001	mg/L	U	0.0002			Dodge City	2014
PWS Tank Bottoms	Mercury	180-44034-1	0.0001	0.0001	mg/L	J	0.0002			Boise	2015
PWS Tank Bottoms	Mercury	180-43573-1	0.0002	0.0001	mg/L	U	0.0002			Salt Lake City	2015
PWS Tank Bottoms	Mercury	180-68912-1	0.0001	0.0001	mg/L	J	0.0002			Farmington	2017
PWS Tank Bottoms	Mercury	180-80846-1	0.0002	0.0001	mg/L	U	0.0002			Sacramento	2018
PWS Tank Bottoms	Mercury	C0L080465001	0.0002	0.0002	mg/L		0.0002			Clackamas	2010
PWS Tank Bottoms	Mercury	180-20714-1	0.0002	0.0002	mg/L	B	0.0002			Salt Lake City	2013
PWS Tank Bottoms	Mercury	C9I170278001	0.00021	0.00021	mg/L		0.0002			Santa Ana	2009
PWS Tank Bottoms	Mercury	180-2452-1	0.00022	0.00022	mg/L		U			Chandler	2011
PWS Tank Bottoms	Mercury	C8F130326001	0.00024	0.00024	mg/L		0.0002			Fargo	2008
PWS Tank Bottoms	Mercury	180-21899-1	0.00026	0.00026	mg/L	B	0.0002			Tulsa	2013
PWS Tank Bottoms	Mercury	180-43578-1	0.00027	0.00027	mg/L		0.0002			Chandler	2015
PWS Tank Bottoms	Mercury	180-77050-1	0.00028	0.00028	mg/L		0.0002			Boise	2018
PWS Tank Bottoms	Mercury	180-10005-1	0.00031	0.00031	mg/L		0.0002			Boise	2012
PWS Tank Bottoms	Mercury	C9E130321001	0.00032	0.00032	mg/L		0.0002			Chandler	2009
PWS Tank Bottoms	Mercury	180-65572-1	0.00036	0.00036	mg/L		0.0002			Chandler	2017
PWS Tank Bottoms	Mercury	180-77711-1	0.00037	0.00037	mg/L		0.0002			Salt Lake City	2018
PWS Tank Bottoms	Mercury	C9K120427001	0.0004	0.0004	mg/L		0.0002			Clackamas	2009
PWS Tank Bottoms	Mercury	180-10295-1	0.00042	0.00042	mg/L	B	0.0002			Salt Lake City	2012
PWS Tank Bottoms	Mercury	C8E200313001	0.00045	0.00045	mg/L		0.0002			Boise	2008
PWS Tank Bottoms	Mercury	180-82828-1	0.001	0.0005	mg/L	U ^	0.001	35	56	Oklahoma City	2018
PWS Tank Bottoms	Mercury	C9D230261001	0.00054	0.00054	mg/L		0.0002			Salt Lake City	2009
PWS Tank Bottoms	Mercury	180-32306-1	0.00073	0.00073	mg/L		0.0002			Salt Lake City	2014
PWS Tank Bottoms	Mercury	C8D030320001	0.00086	0.00086	mg/L		0.0002			Salt Lake City	2008
PWS Tank Bottoms	Mercury	C9E090111001	0.00094	0.00094	mg/L		0.0002			Boise	2009
PWS Tank Bottoms	Mercury	C0D220565001	0.001	0.001	mg/L		0.0002			Salt Lake City	2010
PWS Tank Bottoms	Mercury	180-51960-1	0.002	0.001	mg/L	U	0.002			Farmington	2015
PWS Tank Bottoms	Mercury	180-80926-1	0.0013	0.0013	mg/L	B	0.0002			Farmington	2018
PWS Tank Bottoms	Mercury	180-604-13	0.0015	0.0015	mg/L	H	0.0002			Salt Lake City	2011
PWS Tank Bottoms	Mercury	180-65524-1	0.0036	0.0036	mg/L		0.0002			Salt Lake City	2017
PWS Tank Bottoms	Mercury	180-74608-1	0.009	0.009	mg/L	J	0.017			Salisbury	2018
PWS Tank Bottoms	Mercury	180-56702-1	0.01	0.01	mg/L	J	0.033			Farmington	2016
PWS Tank Bottoms	Mercury	C8H250147001	0.033	0.0165	mg/L	U	0.033			Blaine	2008

PWS Tank Bottoms	Mercury	C8H250154001	0.033	0.0165	mg/L	U	0.033	Blaine	2008
PWS Tank Bottoms	Mercury	C8J030260001	0.033	0.0165	mg/L	U	0.033	Eagan	2008
PWS Tank Bottoms	Mercury	C8J030263001	0.033	0.0165	mg/L	U	0.033	Eagan	2008
PWS Tank Bottoms	Mercury	C9F060175001	0.033	0.0165	mg/L	U	0.033	Wichita	2009
PWS Tank Bottoms	Mercury	C0A200514001	0.033	0.0165	mg/L	U	0.033	Sacramento	2010
PWS Tank Bottoms	Mercury	C0I090490001	0.033	0.0165	mg/L	U	0.033	Santa Ana	2010
PWS Tank Bottoms	Mercury	180-27070-1	0.033	0.0165	mg/L	U	0.033	Sacramento	2013
PWS Tank Bottoms	Mercury	180-32876-1	0.033	0.0165	mg/L	U	0.033	Boise	2014
PWS Tank Bottoms	Mercury	180-53843-1	0.033	0.0165	mg/L	U	0.033	Salt Lake City	2016
PWS Tank Bottoms	Methylphenol, 3 & 4	180-6080-1	0.018	0.018	mg/L	J	0.05	Sioux Falls	2012
PWS Tank Bottoms	Methylphenol, 3 & 4	C8H200252001	0.05	0.025	mg/L	U	0.05	Dodge City	2008
PWS Tank Bottoms	Methylphenol, 3 & 4	C8F130326001	0.05	0.025	mg/L	U	0.05	Fargo	2008
PWS Tank Bottoms	Methylphenol, 3 & 4	C8D030320001	0.05	0.025	mg/L	U	0.05	Salt Lake City	2008
PWS Tank Bottoms	Methylphenol, 3 & 4	C9E090111001	0.05	0.025	mg/L	U	0.05	Boise	2009
PWS Tank Bottoms	Methylphenol, 3 & 4	C9H040289003	0.05	0.025	mg/L	U	0.05	Dodge City	2009
PWS Tank Bottoms	Methylphenol, 3 & 4	C9D230261001	0.05	0.025	mg/L	U	0.05	Salt Lake City	2009
PWS Tank Bottoms	Methylphenol, 3 & 4	C9H040288003	0.05	0.025	mg/L	U	0.05	Wichita	2009
PWS Tank Bottoms	Methylphenol, 3 & 4	C0D220565001	0.05	0.025	mg/L	U	0.05	Salt Lake City	2010
PWS Tank Bottoms	Methylphenol, 3 & 4	180-2334-1	0.05	0.025	mg/L	U	0.05	Boise	2011
PWS Tank Bottoms	Methylphenol, 3 & 4	180-2452-1	0.05	0.025	mg/L	U	0.05	Chandler	2011
PWS Tank Bottoms	Methylphenol, 3 & 4	180-10005-1	0.05	0.025	mg/L	U	0.05	Boise	2012
PWS Tank Bottoms	Methylphenol, 3 & 4	180-21899-1	0.05	0.025	mg/L	U	0.05	Tulsa	2013
PWS Tank Bottoms	Methylphenol, 3 & 4	180-32306-1	0.05	0.025	mg/L	U	0.05	Salt Lake City	2014
PWS Tank Bottoms	Methylphenol, 3 & 4	180-52526-1	0.05	0.025	mg/L	U H	0.05	Boise	2016
PWS Tank Bottoms	Methylphenol, 3 & 4	180-53484-1	0.05	0.025	mg/L	U	0.05	Chandler	2016
PWS Tank Bottoms	Methylphenol, 3 & 4	180-67590-2	0.05	0.025	mg/L	U	0.05	Boise	2017
PWS Tank Bottoms	Methylphenol, 3 & 4	180-68912-1	0.05	0.025	mg/L	U	0.05	Farmington	2017
PWS Tank Bottoms	Methylphenol, 3 & 4	180-80926-1	0.05	0.025	mg/L	U	0.05	Farmington	2018
PWS Tank Bottoms	Methylphenol, 3 & 4	180-82828-1	0.05	0.025	mg/L	U	0.05	Oklahoma City	2018
PWS Tank Bottoms	Methylphenol, 3 & 4	180-80846-1	0.05	0.025	mg/L	U	0.05	Sacramento	2018
PWS Tank Bottoms	Methylphenol, 3 & 4	180-77050-1	0.03	0.03	mg/L	J	0.05	Boise	2018
PWS Tank Bottoms	Methylphenol, 3 & 4	180-65572-1	0.031	0.031	mg/L	J	0.05	Chandler	2017
PWS Tank Bottoms	Methylphenol, 3 & 4	180-35833-1	0.037	0.037	mg/L	J	0.05	Dodge City	2014
PWS Tank Bottoms	Methylphenol, 3 & 4	C9K120427001	0.1	0.05	mg/L	U	0.1	Clackamas	2009

PWS Tank Bottoms	Methylphenol, 3 & 4	C9E210290002	0.054	0.054	mg/L		0.05			Oklahoma City	2009
PWS Tank Bottoms	Methylphenol, 3 & 4	C0H100558001	0.057	0.057	mg/L		0.05			Boise	2010
PWS Tank Bottoms	Methylphenol, 3 & 4	180-65524-1	0.13	0.13	mg/L		0.05			Salt Lake City	2017
PWS Tank Bottoms	Methylphenol, 3 & 4	180-10295-1	0.15	0.15	mg/L		0.05			Salt Lake City	2012
PWS Tank Bottoms	Methylphenol, 3 & 4	C9E130321001	0.16	0.16	mg/L		0.05			Chandler	2009
PWS Tank Bottoms	Methylphenol, 3 & 4	180-77711-1	0.16	0.16	mg/L		0.05			Salt Lake City	2018
PWS Tank Bottoms	Methylphenol, 3 & 4	C8J030263001	0.19	0.19	mg/L		0.1	32	51	Eagan	2008
PWS Tank Bottoms	Methylphenol, 3 & 4	180-53880-1	0.2	0.2	mg/L		0.05			Omaha	2016
PWS Tank Bottoms	Methylphenol, 3 & 4	C8J030260001	0.26	0.26	mg/L		0.1			Eagan	2008
PWS Tank Bottoms	Methylphenol, 3 & 4	180-604-13	0.26	0.26	mg/L	H	0.05			Salt Lake City	2011
PWS Tank Bottoms	Methylphenol, 3 & 4	180-44034-1	0.3	0.3	mg/L		0.05			Boise	2015
PWS Tank Bottoms	Methylphenol, 3 & 4	C8H080290001	0.32	0.32	mg/L		0.05			Wichita	2008
PWS Tank Bottoms	Methylphenol, 3 & 4	C8E200313001	0.75	0.375	mg/L	U	0.75			Boise	2008
PWS Tank Bottoms	Methylphenol, 3 & 4	180-43578-1	0.45	0.45	mg/L		0.05			Chandler	2015
PWS Tank Bottoms	Methylphenol, 3 & 4	180-20714-1	0.48	0.48	mg/L		0.05			Salt Lake City	2013
PWS Tank Bottoms	Methylphenol, 3 & 4	C8H250147001	1	0.5	mg/L	U	1			Blaine	2008
PWS Tank Bottoms	Methylphenol, 3 & 4	C8H250154001	1	0.5	mg/L	U	1			Blaine	2008
PWS Tank Bottoms	Methylphenol, 3 & 4	180-32876-1	1	0.5	mg/L	U	1			Boise	2014
PWS Tank Bottoms	Methylphenol, 3 & 4	180-51960-2	1	0.5	mg/L	U	1			Farmington	2015
PWS Tank Bottoms	Methylphenol, 3 & 4	180-56702-1	1	0.5	mg/L	U	1			Farmington	2016
PWS Tank Bottoms	Methylphenol, 3 & 4	180-74608-1	1	0.5	mg/L	U	1			Salisbury	2018
PWS Tank Bottoms	Methylphenol, 3 & 4	180-23127-1	0.65	0.65	mg/L		0.05			Wichita	2013
PWS Tank Bottoms	Methylphenol, 3 & 4	180-43573-1	1	1	mg/L		0.05			Salt Lake City	2015
PWS Tank Bottoms	Methylphenol, 3 & 4	C9F060175001	1.3	1.3	mg/L		0.1			Wichita	2009
PWS Tank Bottoms	Methylphenol, 3 & 4	C0L080465001	1.3	1.3	mg/L		0.05			Clackamas	2010
PWS Tank Bottoms	Methylphenol, 3 & 4	180-53843-1	5.5	5.5	mg/L		1			Salt Lake City	2016
PWS Tank Bottoms	Nitrobenzene	C8H200252001	0.05	0.025	mg/L	U	0.05			Dodge City	2008
PWS Tank Bottoms	Nitrobenzene	C8F130326001	0.05	0.025	mg/L	U	0.05			Fargo	2008
PWS Tank Bottoms	Nitrobenzene	C8D030320001	0.05	0.025	mg/L	U	0.05			Salt Lake City	2008
PWS Tank Bottoms	Nitrobenzene	C8H080290001	0.05	0.025	mg/L	U	0.05			Wichita	2008
PWS Tank Bottoms	Nitrobenzene	C9E090111001	0.05	0.025	mg/L	U	0.05			Boise	2009
PWS Tank Bottoms	Nitrobenzene	C9E130321001	0.05	0.025	mg/L	U	0.05			Chandler	2009
PWS Tank Bottoms	Nitrobenzene	C9H040289003	0.05	0.025	mg/L	U	0.05			Dodge City	2009
PWS Tank Bottoms	Nitrobenzene	C9E210290002	0.05	0.025	mg/L	U	0.05			Oklahoma City	2009

PWS Tank Bottoms	Nitrobenzene	C9D230261001	0.05	0.025	mg/L	U	0.05			Salt Lake City	2009
PWS Tank Bottoms	Nitrobenzene	C9H040288003	0.05	0.025	mg/L	U	0.05			Wichita	2009
PWS Tank Bottoms	Nitrobenzene	C0H100558001	0.05	0.025	mg/L	U	0.05			Boise	2010
PWS Tank Bottoms	Nitrobenzene	C0L080465001	0.05	0.025	mg/L	U	0.05			Clackamas	2010
PWS Tank Bottoms	Nitrobenzene	C0D220565001	0.05	0.025	mg/L	U	0.05			Salt Lake City	2010
PWS Tank Bottoms	Nitrobenzene	180-2334-1	0.05	0.025	mg/L	U	0.05			Boise	2011
PWS Tank Bottoms	Nitrobenzene	180-2452-1	0.05	0.025	mg/L	U	0.05			Chandler	2011
PWS Tank Bottoms	Nitrobenzene	180-604-13	0.05	0.025	mg/L	U	0.05			Salt Lake City	2011
PWS Tank Bottoms	Nitrobenzene	180-10005-1	0.05	0.025	mg/L	U	0.05			Boise	2012
PWS Tank Bottoms	Nitrobenzene	180-10295-1	0.05	0.025	mg/L	U	0.05			Salt Lake City	2012
PWS Tank Bottoms	Nitrobenzene	180-20714-1	0.05	0.025	mg/L	U	0.05			Salt Lake City	2013
PWS Tank Bottoms	Nitrobenzene	180-21899-1	0.05	0.025	mg/L	U	0.05			Tulsa	2013
PWS Tank Bottoms	Nitrobenzene	180-23127-1	0.05	0.025	mg/L	U	0.05			Wichita	2013
PWS Tank Bottoms	Nitrobenzene	180-35833-1	0.05	0.025	mg/L	U	0.05			Dodge City	2014
PWS Tank Bottoms	Nitrobenzene	180-32306-1	0.05	0.025	mg/L	U	0.05			Salt Lake City	2014
PWS Tank Bottoms	Nitrobenzene	180-44034-1	0.05	0.025	mg/L	U	0.05			Boise	2015
PWS Tank Bottoms	Nitrobenzene	180-43578-1	0.05	0.025	mg/L	U	0.05			Chandler	2015
PWS Tank Bottoms	Nitrobenzene	180-43573-1	0.05	0.025	mg/L	U	0.05			Salt Lake City	2015
PWS Tank Bottoms	Nitrobenzene	180-52526-1	0.05	0.025	mg/L	U H	0.05			Boise	2016
PWS Tank Bottoms	Nitrobenzene	180-53484-1	0.05	0.025	mg/L	U	0.05			Chandler	2016
PWS Tank Bottoms	Nitrobenzene	180-53880-1	0.05	0.025	mg/L	U	0.05			Omaha	2016
PWS Tank Bottoms	Nitrobenzene	180-67590-2	0.05	0.025	mg/L	U	0.05			Boise	2017
PWS Tank Bottoms	Nitrobenzene	180-65572-1	0.05	0.025	mg/L	U	0.05			Chandler	2017
PWS Tank Bottoms	Nitrobenzene	180-68912-1	0.05	0.025	mg/L	U	0.05	32	51	Farmington	2017
PWS Tank Bottoms	Nitrobenzene	180-65524-1	0.05	0.025	mg/L	U	0.05			Salt Lake City	2017
PWS Tank Bottoms	Nitrobenzene	180-77050-1	0.05	0.025	mg/L	U	0.05			Boise	2018
PWS Tank Bottoms	Nitrobenzene	180-80926-1	0.05	0.025	mg/L	U	0.05			Farmington	2018
PWS Tank Bottoms	Nitrobenzene	180-82828-1	0.05	0.025	mg/L	U	0.05			Oklahoma City	2018
PWS Tank Bottoms	Nitrobenzene	180-80846-1	0.05	0.025	mg/L	U	0.05			Sacramento	2018
PWS Tank Bottoms	Nitrobenzene	180-77711-1	0.05	0.025	mg/L	U	0.05			Salt Lake City	2018
PWS Tank Bottoms	Nitrobenzene	C8J030260001	0.1	0.05	mg/L	U	0.1			Eagan	2008
PWS Tank Bottoms	Nitrobenzene	C8J030263001	0.1	0.05	mg/L	U	0.1			Eagan	2008
PWS Tank Bottoms	Nitrobenzene	C9K120427001	0.1	0.05	mg/L	U	0.1			Clackamas	2009
PWS Tank Bottoms	Nitrobenzene	C9F060175001	0.1	0.05	mg/L	U	0.1			Wichita	2009

PWS Tank Bottoms	Nitrobenzene	180-6080-1	0.26	0.26	mg/L		0.05	Sioux Falls	2012
PWS Tank Bottoms	Nitrobenzene	C8E200313001	0.75	0.375	mg/L	U	0.75	Boise	2008
PWS Tank Bottoms	Nitrobenzene	C8H250147001	1	0.5	mg/L	U	1	Blaine	2008
PWS Tank Bottoms	Nitrobenzene	C8H250154001	1	0.5	mg/L	U	1	Blaine	2008
PWS Tank Bottoms	Nitrobenzene	180-32876-1	1	0.5	mg/L	U	1	Boise	2014
PWS Tank Bottoms	Nitrobenzene	180-51960-2	1	0.5	mg/L	U	1	Farmington	2015
PWS Tank Bottoms	Nitrobenzene	180-56702-1	1	0.5	mg/L	U	1	Farmington	2016
PWS Tank Bottoms	Nitrobenzene	180-53843-1	1	0.5	mg/L	U	1	Salt Lake City	2016
PWS Tank Bottoms	Nitrobenzene	180-74608-1	1	0.5	mg/L	U	1	Salisbury	2018
PWS Tank Bottoms	Pentachlorophenol	180-32876-1	0.13	0.065	mg/L	U	0.13	Boise	2014
PWS Tank Bottoms	Pentachlorophenol	180-51960-2	0.13	0.065	mg/L	U	0.13	Farmington	2015
PWS Tank Bottoms	Pentachlorophenol	180-56702-1	0.13	0.065	mg/L	U	0.13	Farmington	2016
PWS Tank Bottoms	Pentachlorophenol	180-53843-1	0.13	0.065	mg/L	U	0.13	Salt Lake City	2016
PWS Tank Bottoms	Pentachlorophenol	180-74608-1	0.13	0.065	mg/L	U	0.13	Salisbury	2018
PWS Tank Bottoms	Pentachlorophenol	C8H200252001	0.25	0.125	mg/L	U	0.25	Dodge City	2008
PWS Tank Bottoms	Pentachlorophenol	C8F130326001	0.25	0.125	mg/L	U	0.25	Fargo	2008
PWS Tank Bottoms	Pentachlorophenol	C8D030320001	0.25	0.125	mg/L	U	0.25	Salt Lake City	2008
PWS Tank Bottoms	Pentachlorophenol	C8H080290001	0.25	0.125	mg/L	U	0.25	Wichita	2008
PWS Tank Bottoms	Pentachlorophenol	C9E090111001	0.25	0.125	mg/L	U	0.25	Boise	2009
PWS Tank Bottoms	Pentachlorophenol	C9E130321001	0.25	0.125	mg/L	U	0.25	Chandler	2009
PWS Tank Bottoms	Pentachlorophenol	C9H040289003	0.25	0.125	mg/L	U	0.25	Dodge City	2009
PWS Tank Bottoms	Pentachlorophenol	C9E210290002	0.25	0.125	mg/L	U	0.25	Oklahoma City	2009
PWS Tank Bottoms	Pentachlorophenol	C9D230261001	0.25	0.125	mg/L	U	0.25	Salt Lake City	2009
PWS Tank Bottoms	Pentachlorophenol	C9H040288003	0.25	0.125	mg/L	U	0.25	Wichita	2009
PWS Tank Bottoms	Pentachlorophenol	C0H100558001	0.25	0.125	mg/L	U	0.25	Boise	2010
PWS Tank Bottoms	Pentachlorophenol	C0L080465001	0.25	0.125	mg/L	U	0.25	Clackamas	2010
PWS Tank Bottoms	Pentachlorophenol	C0D220565001	0.25	0.125	mg/L	U	0.25	Salt Lake City	2010
PWS Tank Bottoms	Pentachlorophenol	180-2334-1	0.25	0.125	mg/L	U	0.25	Boise	2011
PWS Tank Bottoms	Pentachlorophenol	180-2452-1	0.25	0.125	mg/L	U	0.25	Chandler	2011
PWS Tank Bottoms	Pentachlorophenol	180-604-13	0.25	0.125	mg/L	U	0.25	Salt Lake City	2011
PWS Tank Bottoms	Pentachlorophenol	180-10005-1	0.25	0.125	mg/L	U	0.25	Boise	2012
PWS Tank Bottoms	Pentachlorophenol	180-10295-1	0.25	0.125	mg/L	U	0.25	Salt Lake City	2012
PWS Tank Bottoms	Pentachlorophenol	180-6080-1	0.25	0.125	mg/L	U	0.25	Sioux Falls	2012
PWS Tank Bottoms	Pentachlorophenol	180-20714-1	0.25	0.125	mg/L	U	0.25	Salt Lake City	2013

PWS Tank Bottoms	Pentachlorophenol	180-21899-1	0.25	0.125	mg/L	U	0.25			Tulsa	2013
PWS Tank Bottoms	Pentachlorophenol	180-23127-1	0.25	0.125	mg/L	U	0.25			Wichita	2013
PWS Tank Bottoms	Pentachlorophenol	180-35833-1	0.25	0.125	mg/L	U	0.25			Dodge City	2014
PWS Tank Bottoms	Pentachlorophenol	180-32306-1	0.25	0.125	mg/L	U	0.25			Salt Lake City	2014
PWS Tank Bottoms	Pentachlorophenol	180-44034-1	0.25	0.125	mg/L	U	0.25			Boise	2015
PWS Tank Bottoms	Pentachlorophenol	180-43578-1	0.25	0.125	mg/L	U	0.25			Chandler	2015
PWS Tank Bottoms	Pentachlorophenol	180-43573-1	0.25	0.125	mg/L	U	0.25	32	51	Salt Lake City	2015
PWS Tank Bottoms	Pentachlorophenol	180-52526-1	0.25	0.125	mg/L	U H	0.25			Boise	2016
PWS Tank Bottoms	Pentachlorophenol	180-53484-1	0.25	0.125	mg/L	U	0.25			Chandler	2016
PWS Tank Bottoms	Pentachlorophenol	180-53880-1	0.25	0.125	mg/L	U	0.25			Omaha	2016
PWS Tank Bottoms	Pentachlorophenol	180-67590-2	0.25	0.125	mg/L	U	0.25			Boise	2017
PWS Tank Bottoms	Pentachlorophenol	180-65572-1	0.25	0.125	mg/L	U	0.25			Chandler	2017
PWS Tank Bottoms	Pentachlorophenol	180-68912-1	0.25	0.125	mg/L	U	0.25			Farmington	2017
PWS Tank Bottoms	Pentachlorophenol	180-65524-1	0.25	0.125	mg/L	U	0.25			Salt Lake City	2017
PWS Tank Bottoms	Pentachlorophenol	180-77050-1	0.25	0.125	mg/L	U	0.25			Boise	2018
PWS Tank Bottoms	Pentachlorophenol	180-80926-1	0.25	0.125	mg/L	U	0.25			Farmington	2018
PWS Tank Bottoms	Pentachlorophenol	180-82828-1	0.25	0.125	mg/L	U	0.25			Oklahoma City	2018
PWS Tank Bottoms	Pentachlorophenol	180-80846-1	0.25	0.125	mg/L	U	0.25			Sacramento	2018
PWS Tank Bottoms	Pentachlorophenol	180-77711-1	0.25	0.125	mg/L	U	0.25			Salt Lake City	2018
PWS Tank Bottoms	Pentachlorophenol	C9K120427001	0.5	0.25	mg/L	U	0.5			Clackamas	2009
PWS Tank Bottoms	Pentachlorophenol	C8E200313001	3.8	1.9	mg/L	U	3.8			Boise	2008
PWS Tank Bottoms	Pentachlorophenol	C8H250147001	100	50	mg/L	U	100			Blaine	2008
PWS Tank Bottoms	Pentachlorophenol	C8H250154001	100	50	mg/L	U	100			Blaine	2008
PWS Tank Bottoms	Pentachlorophenol	C8J030260001	100	50	mg/L	U	100			Eagan	2008
PWS Tank Bottoms	Pentachlorophenol	C8J030263001	100	50	mg/L	U	100			Eagan	2008
PWS Tank Bottoms	Pentachlorophenol	C9F060175001	100	50	mg/L	U	100			Wichita	2009
PWS Tank Bottoms	pH	180-51960-1	4.6	4.6	SU	HF	0.1			Farmington	2015
PWS Tank Bottoms	pH	180-53843-1	5.46	5.46	SU		0.1			Salt Lake City	2016
PWS Tank Bottoms	pH	C8J030260001	5.6	5.6	No Units					Eagan	2008
PWS Tank Bottoms	pH	180-74608-1	5.7	5.7	SU	HF	0.1			Salisbury	2018
PWS Tank Bottoms	pH	180-35833-1	5.84	5.84	No Units		0.1			Dodge City	2014
PWS Tank Bottoms	pH	180-53484-1	6.01	6.01	SU		0.1			Chandler	2016
PWS Tank Bottoms	pH	C8J030263001	6.2	6.2	No Units					Eagan	2008
PWS Tank Bottoms	pH	180-43573-1	6.39	6.39	SU	H	0.1			Salt Lake City	2015

PWS Tank Bottoms	pH	C8H200252001	6.4	6.4	No Units					Dodge City	2008
PWS Tank Bottoms	pH	C9F060175001	6.4	6.4	No Units					Wichita	2009
PWS Tank Bottoms	pH	C9I170278001	6.6	6.6	No Units					Santa Ana	2009
PWS Tank Bottoms	pH	180-56702-1	6.62	6.62	SU		0.1			Farmington	2016
PWS Tank Bottoms	pH	C0I090490001	6.8	6.8	No Units					Santa Ana	2010
PWS Tank Bottoms	pH	180-68912-1	6.8	6.8	SU	HF	0.1			Farmington	2017
PWS Tank Bottoms	pH	C9H040289001	6.9	6.9	No Units					Dodge City	2009
PWS Tank Bottoms	pH	180-65572-1	7	7	SU	HF	0.1			Chandler	2017
PWS Tank Bottoms	pH	180-80846-1	7	7	SU	HF	0.1			Sacramento	2018
PWS Tank Bottoms	pH	180-53880-1	7.02	7.02	SU	H	0.1			Omaha	2016
PWS Tank Bottoms	pH	180-6080-1	7.11	7.11	No Units	H	0.1			Sioux Falls	2012
PWS Tank Bottoms	pH	C9H040288001	7.2	7.2	No Units					Wichita	2009
PWS Tank Bottoms	pH	C9E130321001	7.3	7.3	No Units					Chandler	2009
PWS Tank Bottoms	pH	180-21899-1	7.3	7.3	No Units	H	0.1			Tulsa	2013
PWS Tank Bottoms	pH	C8H080290001	7.4	7.4	No Units					Wichita	2008
PWS Tank Bottoms	pH	C0A200514001	7.4	7.4	No Units					Sacramento	2010
PWS Tank Bottoms	pH	180-10005-1	7.4	7.4	No Units		0.1			Boise	2012
PWS Tank Bottoms	pH	180-2452-1	7.44	7.44	No Units		0.1			Chandler	2011
PWS Tank Bottoms	pH	C0L080465001	7.5	7.5	No Units					Clackamas	2010
PWS Tank Bottoms	pH	180-2462-1	7.58	7.58	No Units		0.1			Santa Ana	2011
PWS Tank Bottoms	pH	C8E200313001	7.6	7.6	No Units					Boise	2008
PWS Tank Bottoms	pH	180-80926-1	7.6	7.6	SU	HF	0.1			Farmington	2018
PWS Tank Bottoms	pH	180-23127-1	7.66	7.66	No Units	H	0.1			Wichita	2013
PWS Tank Bottoms	pH	180-52526-1	7.68	7.68	SU	H	0.1			Boise	2016
PWS Tank Bottoms	pH	180-27070-1	7.75	7.75	No Units	H	0.1			Sacramento	2013
PWS Tank Bottoms	pH	C9K120427001	7.8	7.8	No Units					Clackamas	2009
PWS Tank Bottoms	pH	C8H250147001	7.9	7.9	No Units			35	56	Blaine	2008
PWS Tank Bottoms	pH	180-65524-1	7.9	7.9	SU	HF	0.1			Salt Lake City	2017
PWS Tank Bottoms	pH	180-2334-1	7.95	7.95	No Units	H	0.1			Boise	2011
PWS Tank Bottoms	pH	C8H250154001	8	8	No Units					Blaine	2008
PWS Tank Bottoms	pH	C9E090111001	8.2	8.2	No Units					Boise	2009
PWS Tank Bottoms	pH	180-77050-1	8.2	8.2	SU	HF	0.1			Boise	2018
PWS Tank Bottoms	pH	180-44034-1	8.28	8.28	SU	H	0.1			Boise	2015
PWS Tank Bottoms	pH	180-67590-1	8.3	8.3	SU	H	0.1			Boise	2017

PWS Tank Bottoms	pH	C0D220565001	8.4	8.4	No Units			Salt Lake City	2010
PWS Tank Bottoms	pH	180-32876-1	8.41	8.41	No Units		0.1	Boise	2014
PWS Tank Bottoms	pH	C9D230261001	8.5	8.5	No Units			Salt Lake City	2009
PWS Tank Bottoms	pH	C0H100558001	8.6	8.6	No Units			Boise	2010
PWS Tank Bottoms	pH	180-604-11	8.6	8.6	No Units	HF	0.1	Salt Lake City	2011
PWS Tank Bottoms	pH	C9E210290001	8.7	8.7	No Units			Oklahoma City	2009
PWS Tank Bottoms	pH	180-82828-1	8.7	8.7	SU	HF	0.1	Oklahoma City	2018
PWS Tank Bottoms	pH	180-32306-1	8.76	8.76	No Units	H	0.1	Salt Lake City	2014
PWS Tank Bottoms	pH	180-20714-1	9.36	9.36	No Units	H	0.1	Salt Lake City	2013
PWS Tank Bottoms	pH	180-77711-1	9.4	9.4	SU	HF	0.1	Salt Lake City	2018
PWS Tank Bottoms	pH	C8D030320001	9.6	9.6	No Units			Salt Lake City	2008
PWS Tank Bottoms	pH	180-10295-1	9.68	9.68	No Units		0.1	Salt Lake City	2012
PWS Tank Bottoms	pH	180-43578-1	9.7	9.7	SU		0.1	Chandler	2015
PWS Tank Bottoms	pH	C8F130326001	10	10	No Units			Fargo	2008
PWS Tank Bottoms	Pyridine	C8H200252001	0.1	0.05	mg/L	U	0.1	Dodge City	2008
PWS Tank Bottoms	Pyridine	C8F130326001	0.1	0.05	mg/L	U	0.1	Fargo	2008
PWS Tank Bottoms	Pyridine	C8D030320001	0.1	0.05	mg/L	U	0.1	Salt Lake City	2008
PWS Tank Bottoms	Pyridine	C8H080290001	0.1	0.05	mg/L	U	0.1	Wichita	2008
PWS Tank Bottoms	Pyridine	C9E090111001	0.1	0.05	mg/L	U	0.1	Boise	2009
PWS Tank Bottoms	Pyridine	C9E130321001	0.1	0.05	mg/L	U	0.1	Chandler	2009
PWS Tank Bottoms	Pyridine	C9H040289003	0.1	0.05	mg/L	U	0.1	Dodge City	2009
PWS Tank Bottoms	Pyridine	C9E210290002	0.1	0.05	mg/L	U	0.1	Oklahoma City	2009
PWS Tank Bottoms	Pyridine	C9D230261001	0.1	0.05	mg/L	U	0.1	Salt Lake City	2009
PWS Tank Bottoms	Pyridine	C9H040288003	0.1	0.05	mg/L	U	0.1	Wichita	2009
PWS Tank Bottoms	Pyridine	C0H100558001	0.1	0.05	mg/L	U	0.1	Boise	2010
PWS Tank Bottoms	Pyridine	C0L080465001	0.1	0.05	mg/L	U	0.1	Clackamas	2010
PWS Tank Bottoms	Pyridine	C0D220565001	0.1	0.05	mg/L	U	0.1	Salt Lake City	2010
PWS Tank Bottoms	Pyridine	180-2334-1	0.1	0.05	mg/L	U	0.1	Boise	2011
PWS Tank Bottoms	Pyridine	180-2452-1	0.1	0.05	mg/L	U	0.1	Chandler	2011
PWS Tank Bottoms	Pyridine	180-604-13	0.1	0.05	mg/L	U	0.1	Salt Lake City	2011
PWS Tank Bottoms	Pyridine	180-10005-1	0.1	0.05	mg/L	U *	0.1	Boise	2012
PWS Tank Bottoms	Pyridine	180-10295-1	0.1	0.05	mg/L	U	0.1	Salt Lake City	2012
PWS Tank Bottoms	Pyridine	180-6080-1	0.1	0.05	mg/L	U	0.1	Sioux Falls	2012
PWS Tank Bottoms	Pyridine	180-20714-1	0.1	0.05	mg/L	U	0.1	Salt Lake City	2013

PWS Tank Bottoms	Pyridine	180-21899-1	0.1	0.05	mg/L	U	0.1			Tulsa	2013
PWS Tank Bottoms	Pyridine	180-23127-1	0.1	0.05	mg/L	U	0.1			Wichita	2013
PWS Tank Bottoms	Pyridine	180-35833-1	0.1	0.05	mg/L	U	0.1			Dodge City	2014
PWS Tank Bottoms	Pyridine	180-32306-1	0.1	0.05	mg/L	U *	0.1			Salt Lake City	2014
PWS Tank Bottoms	Pyridine	180-44034-1	0.1	0.05	mg/L	U	0.1			Boise	2015
PWS Tank Bottoms	Pyridine	180-43578-1	0.1	0.05	mg/L	U	0.1			Chandler	2015
PWS Tank Bottoms	Pyridine	180-43573-1	0.1	0.05	mg/L	U	0.1			Salt Lake City	2015
PWS Tank Bottoms	Pyridine	180-52526-1	0.1	0.05	mg/L	U H	0.1			Boise	2016
PWS Tank Bottoms	Pyridine	180-53484-1	0.1	0.05	mg/L	U	0.1			Chandler	2016
PWS Tank Bottoms	Pyridine	180-53880-1	0.1	0.05	mg/L	U	0.1			Omaha	2016
PWS Tank Bottoms	Pyridine	180-67590-2	0.1	0.05	mg/L	U	0.1			Boise	2017
PWS Tank Bottoms	Pyridine	180-65572-1	0.1	0.05	mg/L	U	0.1	32	51	Chandler	2017
PWS Tank Bottoms	Pyridine	180-68912-1	0.1	0.05	mg/L	U	0.1			Farmington	2017
PWS Tank Bottoms	Pyridine	180-65524-1	0.1	0.05	mg/L	U	0.1			Salt Lake City	2017
PWS Tank Bottoms	Pyridine	180-77050-1	0.1	0.05	mg/L	U	0.1			Boise	2018
PWS Tank Bottoms	Pyridine	180-80926-1	0.1	0.05	mg/L	U	0.1			Farmington	2018
PWS Tank Bottoms	Pyridine	180-82828-1	0.1	0.05	mg/L	U	0.1			Oklahoma City	2018
PWS Tank Bottoms	Pyridine	180-80846-1	0.1	0.05	mg/L	U	0.1			Sacramento	2018
PWS Tank Bottoms	Pyridine	180-77711-1	0.1	0.05	mg/L	U	0.1			Salt Lake City	2018
PWS Tank Bottoms	Pyridine	C9K120427001	0.2	0.1	mg/L	U	0.2			Clackamas	2009
PWS Tank Bottoms	Pyridine	C8J030260001	0.5	0.25	mg/L	U	0.5			Eagan	2008
PWS Tank Bottoms	Pyridine	C8J030263001	0.5	0.25	mg/L	U	0.5			Eagan	2008
PWS Tank Bottoms	Pyridine	C9F060175001	0.5	0.25	mg/L	U	0.5			Wichita	2009
PWS Tank Bottoms	Pyridine	C8E200313001	1.5	0.75	mg/L	U	1.5			Boise	2008
PWS Tank Bottoms	Pyridine	C8H250147001	5	2.5	mg/L	U	5			Blaine	2008
PWS Tank Bottoms	Pyridine	C8H250154001	5	2.5	mg/L	U	5			Blaine	2008
PWS Tank Bottoms	Pyridine	180-32876-1	5	2.5	mg/L	U	5			Boise	2014
PWS Tank Bottoms	Pyridine	180-51960-2	5	2.5	mg/L	U	5			Farmington	2015
PWS Tank Bottoms	Pyridine	180-56702-1	5	2.5	mg/L	U	5			Farmington	2016
PWS Tank Bottoms	Pyridine	180-53843-1	5	2.5	mg/L	U	5			Salt Lake City	2016
PWS Tank Bottoms	Pyridine	180-74608-1	5	2.5	mg/L	U	5			Salisbury	2018
PWS Tank Bottoms	Selenium	180-20714-1	0.004	0.004	mg/L	J B	0.05			Salt Lake City	2013
PWS Tank Bottoms	Selenium	180-10005-1	0.0075	0.0075	mg/L	J B	0.05			Boise	2012
PWS Tank Bottoms	Selenium	180-604-13	0.011	0.011	mg/L	J B	0.05			Salt Lake City	2011

PWS Tank Bottoms	Selenium	180-2462-1	0.011	0.011	mg/L	J B	0.05			Santa Ana	2011
PWS Tank Bottoms	Selenium	180-2452-1	0.013	0.013	mg/L	J B	0.05			Chandler	2011
PWS Tank Bottoms	Selenium	180-2334-1	0.015	0.015	mg/L	J	0.25			Boise	2011
PWS Tank Bottoms	Selenium	180-23127-1	0.015	0.015	mg/L	J B	0.05			Wichita	2013
PWS Tank Bottoms	Selenium	180-6080-1	0.02	0.02	mg/L	J B	0.25			Sioux Falls	2012
PWS Tank Bottoms	Selenium	180-21899-1	0.02	0.02	mg/L	J B	0.05			Tulsa	2013
PWS Tank Bottoms	Selenium	C9E090111001	0.05	0.025	mg/L	U	0.05			Boise	2009
PWS Tank Bottoms	Selenium	C9E130321001	0.05	0.025	mg/L	U	0.05			Chandler	2009
PWS Tank Bottoms	Selenium	C9K120427001	0.05	0.025	mg/L	U	0.05			Clackamas	2009
PWS Tank Bottoms	Selenium	C9H040289003	0.05	0.025	mg/L	U	0.05			Dodge City	2009
PWS Tank Bottoms	Selenium	C9E210290002	0.05	0.025	mg/L	U	0.05			Oklahoma City	2009
PWS Tank Bottoms	Selenium	C9D230261001	0.05	0.025	mg/L	U	0.05			Salt Lake City	2009
PWS Tank Bottoms	Selenium	C9I170278001	0.05	0.025	mg/L	U	0.05			Santa Ana	2009
PWS Tank Bottoms	Selenium	C9H040288003	0.05	0.025	mg/L	U	0.05			Wichita	2009
PWS Tank Bottoms	Selenium	C0L080465001	0.05	0.025	mg/L	U	0.05			Clackamas	2010
PWS Tank Bottoms	Selenium	C0D220565001	0.05	0.025	mg/L	U	0.05			Salt Lake City	2010
PWS Tank Bottoms	Selenium	180-35833-1	0.026	0.026	mg/L	J	0.5			Dodge City	2014
PWS Tank Bottoms	Selenium	180-53484-1	0.026	0.026	mg/L	J	0.5			Chandler	2016
PWS Tank Bottoms	Selenium	180-10295-1	0.033	0.033	mg/L	J	0.25			Salt Lake City	2012
PWS Tank Bottoms	Selenium	180-32306-1	0.037	0.037	mg/L	J B	0.5			Salt Lake City	2014
PWS Tank Bottoms	Selenium	180-43573-1	0.037	0.037	mg/L	J B	0.5			Salt Lake City	2015
PWS Tank Bottoms	Selenium	180-52526-1	0.045	0.045	mg/L	J B ^	0.5			Boise	2016
PWS Tank Bottoms	Selenium	180-77711-1	0.046	0.046	mg/L	J	0.5			Salt Lake City	2018
PWS Tank Bottoms	Selenium	C0H100558001	0.1	0.05	mg/L	U	0.1			Boise	2010
PWS Tank Bottoms	Selenium	180-51960-1	0.1	0.05	mg/L	U	0.1			Farmington	2015
PWS Tank Bottoms	Selenium	180-43578-1	0.06	0.06	mg/L	J B	0.5			Chandler	2015
PWS Tank Bottoms	Selenium	C8E200313001	0.25	0.125	mg/L	U	0.25			Boise	2008
PWS Tank Bottoms	Selenium	C8H200252001	0.25	0.125	mg/L	U	0.25			Dodge City	2008
PWS Tank Bottoms	Selenium	C8F130326001	0.25	0.125	mg/L	U	0.25			Fargo	2008
PWS Tank Bottoms	Selenium	C8D030320001	0.25	0.125	mg/L	U	0.25			Salt Lake City	2008
PWS Tank Bottoms	Selenium	C8H080290001	0.25	0.125	mg/L	U	0.25			Wichita	2008
PWS Tank Bottoms	Selenium	180-44034-1	0.19	0.19	mg/L	J B	0.5	35	56	Boise	2015
PWS Tank Bottoms	Selenium	180-67590-2	0.23	0.23	mg/L	J	0.5			Boise	2017
PWS Tank Bottoms	Selenium	C8H250147001	0.5	0.25	mg/L	U	0.5			Blaine	2008

PWS Tank Bottoms	Selenium	C8H250154001	0.5	0.25	mg/L	U	0.5	Blaine	2008
PWS Tank Bottoms	Selenium	C8J030260001	0.5	0.25	mg/L	U	0.5	Eagan	2008
PWS Tank Bottoms	Selenium	C8J030263001	0.5	0.25	mg/L	U	0.5	Eagan	2008
PWS Tank Bottoms	Selenium	C9F060175001	0.5	0.25	mg/L	U	0.5	Wichita	2009
PWS Tank Bottoms	Selenium	C0A200514001	0.5	0.25	mg/L	U	0.5	Sacramento	2010
PWS Tank Bottoms	Selenium	C0I090490001	0.5	0.25	mg/L	U	0.5	Santa Ana	2010
PWS Tank Bottoms	Selenium	180-53880-1	0.5	0.25	mg/L	U	0.5	Omaha	2016
PWS Tank Bottoms	Selenium	180-65572-1	0.5	0.25	mg/L	U	0.5	Chandler	2017
PWS Tank Bottoms	Selenium	180-68912-1	0.5	0.25	mg/L	U	0.5	Farmington	2017
PWS Tank Bottoms	Selenium	180-65524-1	0.5	0.25	mg/L	U	0.5	Salt Lake City	2017
PWS Tank Bottoms	Selenium	180-77050-1	0.5	0.25	mg/L	U	0.5	Boise	2018
PWS Tank Bottoms	Selenium	180-80926-1	0.5	0.25	mg/L	U	0.5	Farmington	2018
PWS Tank Bottoms	Selenium	180-82828-1	0.5	0.25	mg/L	U	0.5	Oklahoma City	2018
PWS Tank Bottoms	Selenium	180-80846-1	0.5	0.25	mg/L	U	0.5	Sacramento	2018
PWS Tank Bottoms	Selenium	180-27070-1	1	0.5	mg/L	U	1	Sacramento	2013
PWS Tank Bottoms	Selenium	180-32876-1	1	0.5	mg/L	U	1	Boise	2014
PWS Tank Bottoms	Selenium	180-56702-1	1	0.5	mg/L	U	1	Farmington	2016
PWS Tank Bottoms	Selenium	180-53843-1	1	0.5	mg/L	U	1	Salt Lake City	2016
PWS Tank Bottoms	Selenium	180-74608-1	1	0.5	mg/L	U	1	Salisbury	2018
PWS Tank Bottoms	Silver	180-604-13	0.0013	0.0013	mg/L	J	0.05	Salt Lake City	2011
PWS Tank Bottoms	Silver	180-10005-1	0.0037	0.0037	mg/L	J	0.05	Boise	2012
PWS Tank Bottoms	Silver	180-44034-1	0.0058	0.0058	mg/L	J	0.5	Boise	2015
PWS Tank Bottoms	Silver	C9E090111001	0.05	0.025	mg/L	U	0.05	Boise	2009
PWS Tank Bottoms	Silver	C9E130321001	0.05	0.025	mg/L	U	0.05	Chandler	2009
PWS Tank Bottoms	Silver	C9K120427001	0.05	0.025	mg/L	U	0.05	Clackamas	2009
PWS Tank Bottoms	Silver	C9H040289003	0.05	0.025	mg/L	U	0.05	Dodge City	2009
PWS Tank Bottoms	Silver	C9E210290002	0.05	0.025	mg/L	U	0.05	Oklahoma City	2009
PWS Tank Bottoms	Silver	C9D230261001	0.05	0.025	mg/L	U	0.05	Salt Lake City	2009
PWS Tank Bottoms	Silver	C9I170278001	0.05	0.025	mg/L	U	0.05	Santa Ana	2009
PWS Tank Bottoms	Silver	C9H040288003	0.05	0.025	mg/L	U	0.05	Wichita	2009
PWS Tank Bottoms	Silver	C0H100558001	0.05	0.025	mg/L	U	0.05	Boise	2010
PWS Tank Bottoms	Silver	C0L080465001	0.05	0.025	mg/L	U	0.05	Clackamas	2010
PWS Tank Bottoms	Silver	C0D220565001	0.05	0.025	mg/L	U	0.05	Salt Lake City	2010
PWS Tank Bottoms	Silver	180-2452-1	0.05	0.025	mg/L	U	0.05	Chandler	2011

PWS Tank Bottoms	Silver	180-2462-1	0.05	0.025	mg/L	U	0.05			Santa Ana	2011
PWS Tank Bottoms	Silver	180-20714-1	0.05	0.025	mg/L	U	0.05			Salt Lake City	2013
PWS Tank Bottoms	Silver	180-21899-1	0.05	0.025	mg/L	U	0.05			Tulsa	2013
PWS Tank Bottoms	Silver	180-23127-1	0.05	0.025	mg/L	U	0.05			Wichita	2013
PWS Tank Bottoms	Silver	180-51960-1	0.05	0.025	mg/L	U	0.05			Farmington	2015
PWS Tank Bottoms	Silver	180-27070-1	0.082	0.082	mg/L	J	0.5			Sacramento	2013
PWS Tank Bottoms	Silver	180-2334-1	0.25	0.125	mg/L	U	0.25			Boise	2011
PWS Tank Bottoms	Silver	180-10295-1	0.25	0.125	mg/L	U	0.25			Salt Lake City	2012
PWS Tank Bottoms	Silver	180-6080-1	0.25	0.125	mg/L	U	0.25			Sioux Falls	2012
PWS Tank Bottoms	Silver	C8H250147001	0.5	0.25	mg/L	U	0.5			Blaine	2008
PWS Tank Bottoms	Silver	C8H250154001	0.5	0.25	mg/L	U	0.5			Blaine	2008
PWS Tank Bottoms	Silver	C8E200313001	0.5	0.25	mg/L	U	0.5			Boise	2008
PWS Tank Bottoms	Silver	C8H200252001	0.5	0.25	mg/L	U	0.5			Dodge City	2008
PWS Tank Bottoms	Silver	C8J030260001	0.5	0.25	mg/L	U	0.5			Eagan	2008
PWS Tank Bottoms	Silver	C8J030263001	0.5	0.25	mg/L	U	0.5			Eagan	2008
PWS Tank Bottoms	Silver	C8F130326001	0.5	0.25	mg/L	U	0.5			Fargo	2008
PWS Tank Bottoms	Silver	C8D030320001	0.5	0.25	mg/L	U	0.5			Salt Lake City	2008
PWS Tank Bottoms	Silver	C8H080290001	0.5	0.25	mg/L	U	0.5			Wichita	2008
PWS Tank Bottoms	Silver	C9F060175001	0.5	0.25	mg/L	U	0.5			Wichita	2009
PWS Tank Bottoms	Silver	C0A200514001	0.5	0.25	mg/L	U	0.5	35	56	Sacramento	2010
PWS Tank Bottoms	Silver	C0I090490001	0.5	0.25	mg/L	U	0.5			Santa Ana	2010
PWS Tank Bottoms	Silver	180-32876-1	0.5	0.25	mg/L	U	0.5			Boise	2014
PWS Tank Bottoms	Silver	180-35833-1	0.5	0.25	mg/L	U	0.5			Dodge City	2014
PWS Tank Bottoms	Silver	180-32306-1	0.5	0.25	mg/L	U	0.5			Salt Lake City	2014
PWS Tank Bottoms	Silver	180-43578-1	0.5	0.25	mg/L	U	0.5			Chandler	2015
PWS Tank Bottoms	Silver	180-43573-1	0.5	0.25	mg/L	U	0.5			Salt Lake City	2015
PWS Tank Bottoms	Silver	180-52526-1	0.5	0.25	mg/L	U	0.5			Boise	2016
PWS Tank Bottoms	Silver	180-53484-1	0.5	0.25	mg/L	U	0.5			Chandler	2016
PWS Tank Bottoms	Silver	180-56702-1	0.5	0.25	mg/L	U	0.5			Farmington	2016
PWS Tank Bottoms	Silver	180-53880-1	0.5	0.25	mg/L	U	0.5			Omaha	2016
PWS Tank Bottoms	Silver	180-53843-1	0.5	0.25	mg/L	U	0.5			Salt Lake City	2016
PWS Tank Bottoms	Silver	180-67590-2	0.5	0.25	mg/L	U	0.5			Boise	2017
PWS Tank Bottoms	Silver	180-65572-1	0.5	0.25	mg/L	U	0.5			Chandler	2017
PWS Tank Bottoms	Silver	180-68912-1	0.5	0.25	mg/L	U	0.5			Farmington	2017

PWS Tank Bottoms	Silver	180-65524-1	0.5	0.25	mg/L	U	0.5	Salt Lake City	2017
PWS Tank Bottoms	Silver	180-77050-1	0.5	0.25	mg/L	U	0.5	Boise	2018
PWS Tank Bottoms	Silver	180-80926-1	0.5	0.25	mg/L	U	0.5	Farmington	2018
PWS Tank Bottoms	Silver	180-82828-1	0.5	0.25	mg/L	U	0.5	Oklahoma City	2018
PWS Tank Bottoms	Silver	180-80846-1	0.5	0.25	mg/L	U	0.5	Sacramento	2018
PWS Tank Bottoms	Silver	180-77711-1	0.5	0.25	mg/L	U	0.5	Salt Lake City	2018
PWS Tank Bottoms	Silver	180-74608-1	0.5	0.25	mg/L	U	0.5	Salisbury	2018
PWS Tank Bottoms	Specific Gravity	180-74608-1	0.76	0.76	No Unit		0.01	Salisbury	2018
PWS Tank Bottoms	Specific Gravity	180-80926-1	1	1	No Unit		0.01	Farmington	2018
PWS Tank Bottoms	Specific Gravity	180-80846-1	1.4	1.4	No Unit		0.01	Sacramento	2018
PWS Tank Bottoms	Tetrachloroethene	180-21899-1	0.034	0.034	mg/L	J	0.2	Tulsa	2013
PWS Tank Bottoms	Tetrachloroethene	180-10005-1	0.044	0.044	mg/L	J	0.2	Boise	2012
PWS Tank Bottoms	Tetrachloroethene	180-23127-1	0.047	0.047	mg/L	J	0.2	Wichita	2013
PWS Tank Bottoms	Tetrachloroethene	180-53484-1	0.058	0.058	mg/L	J	0.2	Chandler	2016
PWS Tank Bottoms	Tetrachloroethene	180-65572-1	0.07	0.07	mg/L	J	0.2	Chandler	2017
PWS Tank Bottoms	Tetrachloroethene	180-35833-1	0.074	0.074	mg/L	J	0.2	Dodge City	2014
PWS Tank Bottoms	Tetrachloroethene	C8E200313001	0.2	0.1	mg/L	U	0.2	Boise	2008
PWS Tank Bottoms	Tetrachloroethene	C8H080290001	0.2	0.1	mg/L	U	0.2	Wichita	2008
PWS Tank Bottoms	Tetrachloroethene	C9E130321001	0.2	0.1	mg/L	U	0.2	Chandler	2009
PWS Tank Bottoms	Tetrachloroethene	C9H040289003	0.2	0.1	mg/L	U	0.2	Dodge City	2009
PWS Tank Bottoms	Tetrachloroethene	C9E210290002	0.2	0.1	mg/L	U	0.2	Oklahoma City	2009
PWS Tank Bottoms	Tetrachloroethene	C9I170278001	0.2	0.1	mg/L	U	0.2	Santa Ana	2009
PWS Tank Bottoms	Tetrachloroethene	C0L080465001	0.2	0.1	mg/L	U	0.2	Clackamas	2010
PWS Tank Bottoms	Tetrachloroethene	180-2452-1	0.1	0.1	mg/L	J	0.2	Chandler	2011
PWS Tank Bottoms	Tetrachloroethene	180-2462-1	0.2	0.1	mg/L	U	0.2	Santa Ana	2011
PWS Tank Bottoms	Tetrachloroethene	180-6080-1	0.2	0.1	mg/L	U	0.2	Sioux Falls	2012
PWS Tank Bottoms	Tetrachloroethene	180-20714-1	0.2	0.1	mg/L	U	0.2	Salt Lake City	2013
PWS Tank Bottoms	Tetrachloroethene	180-32306-1	0.2	0.1	mg/L	U	0.2	Salt Lake City	2014
PWS Tank Bottoms	Tetrachloroethene	180-43573-1	0.1	0.1	mg/L	J	0.2	Salt Lake City	2015
PWS Tank Bottoms	Tetrachloroethene	180-80926-1	0.2	0.1	mg/L	U	0.2	Farmington	2018
PWS Tank Bottoms	Tetrachloroethene	180-80846-1	0.2	0.1	mg/L	U	0.2	Sacramento	2018
PWS Tank Bottoms	Tetrachloroethene	180-65524-1	0.12	0.12	mg/L	J	0.2	Salt Lake City	2017
PWS Tank Bottoms	Tetrachloroethene	180-77711-1	0.12	0.12	mg/L	J	0.2	Salt Lake City	2018
PWS Tank Bottoms	Tetrachloroethene	180-43578-1	0.13	0.13	mg/L	J	0.2	Chandler	2015

PWS Tank Bottoms	Tetrachloroethene	180-52526-1	0.13	0.13	mg/L	J H	0.2			Boise	2016
PWS Tank Bottoms	Tetrachloroethene	180-56702-1	0.13	0.13	mg/L	J	0.25			Farmington	2016
PWS Tank Bottoms	Tetrachloroethene	180-68912-1	0.13	0.13	mg/L	J	0.2			Farmington	2017
PWS Tank Bottoms	Tetrachloroethene	180-77050-1	0.14	0.14	mg/L	J	0.2			Boise	2018
PWS Tank Bottoms	Tetrachloroethene	180-2334-1	0.16	0.16	mg/L	J H	0.2			Boise	2011
PWS Tank Bottoms	Tetrachloroethene	C9K120427001	0.2	0.2	mg/L		0.2			Clackamas	2009
PWS Tank Bottoms	Tetrachloroethene	C8D030320001	0.21	0.21	mg/L		0.2			Salt Lake City	2008
PWS Tank Bottoms	Tetrachloroethene	180-10295-1	0.22	0.22	mg/L		0.2			Salt Lake City	2012
PWS Tank Bottoms	Tetrachloroethene	C8H200252001	0.23	0.23	mg/L		0.2			Dodge City	2008
PWS Tank Bottoms	Tetrachloroethene	C9H040288003	0.23	0.23	mg/L		0.2			Wichita	2009
PWS Tank Bottoms	Tetrachloroethene	180-67590-2	0.25	0.25	mg/L		0.2	35	56	Boise	2017
PWS Tank Bottoms	Tetrachloroethene	C9E090111001	0.29	0.29	mg/L		0.2			Boise	2009
PWS Tank Bottoms	Tetrachloroethene	C9D230261001	0.3	0.3	mg/L		0.2			Salt Lake City	2009
PWS Tank Bottoms	Tetrachloroethene	C0D220565001	0.38	0.38	mg/L		0.2			Salt Lake City	2010
PWS Tank Bottoms	Tetrachloroethene	C8F130326001	0.44	0.44	mg/L		0.2			Fargo	2008
PWS Tank Bottoms	Tetrachloroethene	C0H100558001	0.71	0.71	mg/L		0.2			Boise	2010
PWS Tank Bottoms	Tetrachloroethene	180-44034-1	0.81	0.81	mg/L		0.2			Boise	2015
PWS Tank Bottoms	Tetrachloroethene	180-53880-1	1.3	1.3	mg/L		0.2			Omaha	2016
PWS Tank Bottoms	Tetrachloroethene	180-82828-1	4.4	4.4	mg/L		0.2			Oklahoma City	2018
PWS Tank Bottoms	Tetrachloroethene	180-51960-1	39	39	mg/L		5			Farmington	2015
PWS Tank Bottoms	Tetrachloroethene	180-604-11	45	45	mg/L	H	0.5			Salt Lake City	2011
PWS Tank Bottoms	Tetrachloroethene	C0I090490001R2	130	130	mg/L		5			Santa Ana	2010
PWS Tank Bottoms	Tetrachloroethene	180-53843-1	550	550	mg/L		25			Salt Lake City	2016
PWS Tank Bottoms	Tetrachloroethene	C0A200514001R2	640	640	mg/L		25			Sacramento	2010
PWS Tank Bottoms	Tetrachloroethene	180-27070-1	730	730	mg/L		50			Sacramento	2013
PWS Tank Bottoms	Tetrachloroethene	C8J030263001R2	840	840	mg/L		50			Eagan	2008
PWS Tank Bottoms	Tetrachloroethene	C8H250147001R2	890	890	mg/L		25			Blaine	2008
PWS Tank Bottoms	Tetrachloroethene	C8H250154001R2	890	890	mg/L		25			Blaine	2008
PWS Tank Bottoms	Tetrachloroethene	C8J030260001R2	1100	1100	mg/L		50			Eagan	2008
PWS Tank Bottoms	Tetrachloroethene	C9F060175001R2	1100	1100	mg/L		50			Wichita	2009
PWS Tank Bottoms	Tetrachloroethene	180-32876-1	1100	1100	mg/L		50			Boise	2014
PWS Tank Bottoms	Tetrachloroethene	180-74608-1	2400	2400	mg/L		25			Salisbury	2018
PWS Tank Bottoms	Trichloroethene	180-10295-1	0.038	0.038	mg/L	J	0.2			Salt Lake City	2012
PWS Tank Bottoms	Trichloroethene	180-23127-1	0.056	0.056	mg/L	J	0.2			Wichita	2013

PWS Tank Bottoms	Trichloroethene	180-65524-1	0.065	0.065	mg/L	J	0.2			Salt Lake City	2017
PWS Tank Bottoms	Trichloroethene	180-43578-1	0.088	0.088	mg/L	J	0.2			Chandler	2015
PWS Tank Bottoms	Trichloroethene	C8E200313001	0.2	0.1	mg/L	U	0.2			Boise	2008
PWS Tank Bottoms	Trichloroethene	C8H200252001	0.2	0.1	mg/L	U	0.2			Dodge City	2008
PWS Tank Bottoms	Trichloroethene	C8F130326001	0.2	0.1	mg/L	U	0.2			Fargo	2008
PWS Tank Bottoms	Trichloroethene	C8D030320001	0.2	0.1	mg/L	U	0.2			Salt Lake City	2008
PWS Tank Bottoms	Trichloroethene	C8H080290001	0.2	0.1	mg/L	U	0.2			Wichita	2008
PWS Tank Bottoms	Trichloroethene	C9E090111001	0.2	0.1	mg/L	U	0.2			Boise	2009
PWS Tank Bottoms	Trichloroethene	C9E130321001	0.2	0.1	mg/L	U	0.2			Chandler	2009
PWS Tank Bottoms	Trichloroethene	C9K120427001	0.2	0.1	mg/L	U	0.2			Clackamas	2009
PWS Tank Bottoms	Trichloroethene	C9H040289003	0.2	0.1	mg/L	U	0.2			Dodge City	2009
PWS Tank Bottoms	Trichloroethene	C9E210290002	0.2	0.1	mg/L	U	0.2			Oklahoma City	2009
PWS Tank Bottoms	Trichloroethene	C9D230261001	0.2	0.1	mg/L	U	0.2			Salt Lake City	2009
PWS Tank Bottoms	Trichloroethene	C9I170278001	0.2	0.1	mg/L	U	0.2			Santa Ana	2009
PWS Tank Bottoms	Trichloroethene	C9H040288003	0.2	0.1	mg/L	U	0.2			Wichita	2009
PWS Tank Bottoms	Trichloroethene	C0H100558001	0.2	0.1	mg/L	U	0.2			Boise	2010
PWS Tank Bottoms	Trichloroethene	C0L080465001	0.2	0.1	mg/L	U	0.2			Clackamas	2010
PWS Tank Bottoms	Trichloroethene	C0D220565001	0.2	0.1	mg/L	U	0.2			Salt Lake City	2010
PWS Tank Bottoms	Trichloroethene	180-2334-1	0.2	0.1	mg/L	U	0.2			Boise	2011
PWS Tank Bottoms	Trichloroethene	180-2452-1	0.2	0.1	mg/L	U	0.2			Chandler	2011
PWS Tank Bottoms	Trichloroethene	180-2462-1	0.2	0.1	mg/L	U	0.2			Santa Ana	2011
PWS Tank Bottoms	Trichloroethene	180-10005-1	0.2	0.1	mg/L	U	0.2			Boise	2012
PWS Tank Bottoms	Trichloroethene	180-6080-1	0.2	0.1	mg/L	U	0.2			Sioux Falls	2012
PWS Tank Bottoms	Trichloroethene	180-20714-1	0.2	0.1	mg/L	U	0.2			Salt Lake City	2013
PWS Tank Bottoms	Trichloroethene	180-21899-1	0.2	0.1	mg/L	U	0.2			Tulsa	2013
PWS Tank Bottoms	Trichloroethene	180-35833-1	0.2	0.1	mg/L	U	0.2			Dodge City	2014
PWS Tank Bottoms	Trichloroethene	180-32306-1	0.2	0.1	mg/L	U	0.2			Salt Lake City	2014
PWS Tank Bottoms	Trichloroethene	180-44034-1	0.2	0.1	mg/L	U	0.2			Boise	2015
PWS Tank Bottoms	Trichloroethene	180-43573-1	0.2	0.1	mg/L	U	0.2			Salt Lake City	2015
PWS Tank Bottoms	Trichloroethene	180-51960-1	0.2	0.1	mg/L	U	0.2			Farmington	2015
PWS Tank Bottoms	Trichloroethene	180-52526-1	0.2	0.1	mg/L	U H	0.2			Boise	2016
PWS Tank Bottoms	Trichloroethene	180-53484-1	0.2	0.1	mg/L	U	0.2			Chandler	2016
PWS Tank Bottoms	Trichloroethene	180-67590-2	0.2	0.1	mg/L	U	0.2	35	56	Boise	2017
PWS Tank Bottoms	Trichloroethene	180-65572-1	0.2	0.1	mg/L	U	0.2			Chandler	2017

PWS Tank Bottoms	Trichloroethene	180-77050-1	0.2	0.1	mg/L	U	0.2	Boise	2018
PWS Tank Bottoms	Trichloroethene	180-80926-1	0.2	0.1	mg/L	U	0.2	Farmington	2018
PWS Tank Bottoms	Trichloroethene	180-82828-1	0.2	0.1	mg/L	U	0.2	Oklahoma City	2018
PWS Tank Bottoms	Trichloroethene	180-80846-1	0.2	0.1	mg/L	U	0.2	Sacramento	2018
PWS Tank Bottoms	Trichloroethene	180-77711-1	0.2	0.1	mg/L	U	0.2	Salt Lake City	2018
PWS Tank Bottoms	Trichloroethene	180-56702-1	0.25	0.125	mg/L	U	0.25	Farmington	2016
PWS Tank Bottoms	Trichloroethene	180-68912-1	0.44	0.44	mg/L		0.2	Farmington	2017
PWS Tank Bottoms	Trichloroethene	C0I090490001	0.49	0.49	mg/L		0.25	Santa Ana	2010
PWS Tank Bottoms	Trichloroethene	180-53880-1	0.55	0.55	mg/L		0.2	Omaha	2016
PWS Tank Bottoms	Trichloroethene	180-32876-1	1.9	1.9	mg/L		0.25	Boise	2014
PWS Tank Bottoms	Trichloroethene	180-27070-1	2.6	2.6	mg/L		0.25	Sacramento	2013
PWS Tank Bottoms	Trichloroethene	180-604-11	2.9	2.9	mg/L	H	0.5	Salt Lake City	2011
PWS Tank Bottoms	Trichloroethene	180-74608-1	6	6	mg/L		0.25	Salisbury	2018
PWS Tank Bottoms	Trichloroethene	180-53843-1	6.9	6.9	mg/L		0.25	Salt Lake City	2016
PWS Tank Bottoms	Trichloroethene	C0A200514001	18	18	mg/L		0.5	Sacramento	2010
PWS Tank Bottoms	Trichloroethene	C8J030260001	23	23	mg/L		0.25	Eagan	2008
PWS Tank Bottoms	Trichloroethene	C9F060175001	32	32	mg/L		0.25	Wichita	2009
PWS Tank Bottoms	Trichloroethene	C8J030263001	34	34	mg/L		0.25	Eagan	2008
PWS Tank Bottoms	Trichloroethene	C8H250147001R2	54	54	mg/L		25	Blaine	2008
PWS Tank Bottoms	Trichloroethene	C8H250154001R2	54	54	mg/L		25	Blaine	2008
PWS Tank Bottoms	Vinyl Chloride	C8H250147001	0.1	0.05	mg/L	U	0.1	Blaine	2008
PWS Tank Bottoms	Vinyl Chloride	C8H250154001	0.1	0.05	mg/L	U	0.1	Blaine	2008
PWS Tank Bottoms	Vinyl Chloride	C8J030260001	0.1	0.05	mg/L	U	0.1	Eagan	2008
PWS Tank Bottoms	Vinyl Chloride	C8J030263001	0.1	0.05	mg/L	U	0.1	Eagan	2008
PWS Tank Bottoms	Vinyl Chloride	C9F060175001	0.1	0.05	mg/L	U	0.1	Wichita	2009
PWS Tank Bottoms	Vinyl Chloride	C0I090490001	0.1	0.05	mg/L	U	0.1	Santa Ana	2010
PWS Tank Bottoms	Vinyl Chloride	180-27070-1	0.1	0.05	mg/L	U	0.1	Sacramento	2013
PWS Tank Bottoms	Vinyl Chloride	180-32876-1	0.1	0.05	mg/L	U	0.1	Boise	2014
PWS Tank Bottoms	Vinyl Chloride	180-56702-1	0.1	0.05	mg/L	U	0.1	Farmington	2016
PWS Tank Bottoms	Vinyl Chloride	180-53843-1	0.1	0.05	mg/L	U	0.1	Salt Lake City	2016
PWS Tank Bottoms	Vinyl chloride	180-74608-1	0.1	0.05	mg/L	U	0.1	Salisbury	2018
PWS Tank Bottoms	Vinyl Chloride	C8E200313001	0.2	0.1	mg/L	U	0.2	Boise	2008
PWS Tank Bottoms	Vinyl Chloride	C8H200252001	0.2	0.1	mg/L	U	0.2	Dodge City	2008
PWS Tank Bottoms	Vinyl Chloride	C8F130326001	0.2	0.1	mg/L	U	0.2	Fargo	2008

PWS Tank Bottoms	Vinyl Chloride	C8D030320001	0.2	0.1	mg/L	U	0.2			Salt Lake City	2008
PWS Tank Bottoms	Vinyl Chloride	C8H080290001	0.2	0.1	mg/L	U	0.2			Wichita	2008
PWS Tank Bottoms	Vinyl Chloride	C9E090111001	0.2	0.1	mg/L	U	0.2			Boise	2009
PWS Tank Bottoms	Vinyl Chloride	C9E130321001	0.2	0.1	mg/L	U	0.2			Chandler	2009
PWS Tank Bottoms	Vinyl Chloride	C9K120427001	0.2	0.1	mg/L	U	0.2			Clackamas	2009
PWS Tank Bottoms	Vinyl Chloride	C9H040289003	0.2	0.1	mg/L	U	0.2			Dodge City	2009
PWS Tank Bottoms	Vinyl Chloride	C9E210290002	0.2	0.1	mg/L	U	0.2			Oklahoma City	2009
PWS Tank Bottoms	Vinyl Chloride	C9D230261001	0.2	0.1	mg/L	U	0.2			Salt Lake City	2009
PWS Tank Bottoms	Vinyl Chloride	C9I170278001	0.2	0.1	mg/L	U	0.2			Santa Ana	2009
PWS Tank Bottoms	Vinyl Chloride	C9H040288003	0.2	0.1	mg/L	U	0.2			Wichita	2009
PWS Tank Bottoms	Vinyl Chloride	C0H100558001	0.2	0.1	mg/L	U	0.2			Boise	2010
PWS Tank Bottoms	Vinyl Chloride	C0L080465001	0.2	0.1	mg/L	U	0.2			Clackamas	2010
PWS Tank Bottoms	Vinyl Chloride	C0A200514001	0.2	0.1	mg/L	U	0.2			Sacramento	2010
PWS Tank Bottoms	Vinyl Chloride	C0D220565001	0.2	0.1	mg/L	U	0.2			Salt Lake City	2010
PWS Tank Bottoms	Vinyl Chloride	180-2334-1	0.2	0.1	mg/L	U	0.2			Boise	2011
PWS Tank Bottoms	Vinyl Chloride	180-2452-1	0.2	0.1	mg/L	U	0.2			Chandler	2011
PWS Tank Bottoms	Vinyl Chloride	180-604-11	0.2	0.1	mg/L	U	0.2			Salt Lake City	2011
PWS Tank Bottoms	Vinyl Chloride	180-2462-1	0.2	0.1	mg/L	U	0.2			Santa Ana	2011
PWS Tank Bottoms	Vinyl Chloride	180-10005-1	0.2	0.1	mg/L	U	0.2			Boise	2012
PWS Tank Bottoms	Vinyl Chloride	180-10295-1	0.2	0.1	mg/L	U	0.2			Salt Lake City	2012
PWS Tank Bottoms	Vinyl Chloride	180-6080-1	0.2	0.1	mg/L	U	0.2	35	56	Sioux Falls	2012
PWS Tank Bottoms	Vinyl Chloride	180-20714-1	0.2	0.1	mg/L	U	0.2			Salt Lake City	2013
PWS Tank Bottoms	Vinyl Chloride	180-21899-1	0.2	0.1	mg/L	U	0.2			Tulsa	2013
PWS Tank Bottoms	Vinyl Chloride	180-23127-1	0.2	0.1	mg/L	U	0.2			Wichita	2013
PWS Tank Bottoms	Vinyl Chloride	180-35833-1	0.2	0.1	mg/L	U	0.2			Dodge City	2014
PWS Tank Bottoms	Vinyl Chloride	180-32306-1	0.2	0.1	mg/L	U	0.2			Salt Lake City	2014
PWS Tank Bottoms	Vinyl Chloride	180-44034-1	0.2	0.1	mg/L	U *	0.2			Boise	2015
PWS Tank Bottoms	Vinyl Chloride	180-43578-1	0.2	0.1	mg/L	U	0.2			Chandler	2015
PWS Tank Bottoms	Vinyl Chloride	180-43573-1	0.2	0.1	mg/L	U	0.2			Salt Lake City	2015
PWS Tank Bottoms	Vinyl Chloride	180-51960-1	0.2	0.1	mg/L	U	0.2			Farmington	2015
PWS Tank Bottoms	Vinyl Chloride	180-52526-1	0.2	0.1	mg/L	U H	0.2			Boise	2016
PWS Tank Bottoms	Vinyl Chloride	180-53484-1	0.2	0.1	mg/L	U *	0.2			Chandler	2016
PWS Tank Bottoms	Vinyl Chloride	180-53880-1	0.2	0.1	mg/L	U	0.2			Omaha	2016
PWS Tank Bottoms	Vinyl chloride	180-67590-2	0.2	0.1	mg/L	U	0.2			Boise	2017

PWS Tank Bottoms	Vinyl chloride	180-65572-1	0.2	0.1	mg/L	U	0.2	Chandler	2017
PWS Tank Bottoms	Vinyl chloride	180-68912-1	0.2	0.1	mg/L	U	0.2	Farmington	2017
PWS Tank Bottoms	Vinyl chloride	180-65524-1	0.2	0.1	mg/L	U	0.2	Salt Lake City	2017
PWS Tank Bottoms	Vinyl chloride	180-77050-1	0.2	0.1	mg/L	U	0.2	Boise	2018
PWS Tank Bottoms	Vinyl chloride	180-80926-1	0.2	0.1	mg/L	U	0.2	Farmington	2018
PWS Tank Bottoms	Vinyl chloride	180-82828-1	0.2	0.1	mg/L	U	0.2	Oklahoma City	2018
PWS Tank Bottoms	Vinyl chloride	180-80846-1	0.2	0.1	mg/L	U	0.2	Sacramento	2018
PWS Tank Bottoms	Vinyl chloride	180-77711-1	0.2	0.1	mg/L	U	0.2	Salt Lake City	2018

APPENDIX III-4.D

2019 AR Data Summary for Waste APW Tank Bottoms

MATRIX	PARAMETER	LAB ID	RESULT	RANKED DATA	UNITS	QUALIFIER	REPORTING LIMIT	Uth VALUE	COUNT	FACILITY	YEAR
APW Tank Bottoms	1,1-Dichloroethene	C6C310223001	0.05	0.025	mg/L	U	0.05			Highland	2006
APW Tank Bottoms	1,1-Dichloroethene	C6I150307001	0.05	0.025	mg/L	U	0.05			El Monte	2006
APW Tank Bottoms	1,1-Dichloroethene	C9G310286001	0.05	0.025	mg/L	U	0.05			El Monte	2009
APW Tank Bottoms	1,1-Dichloroethene	C6C150186001	0.2	0.1	mg/L	U	0.2			Oakland	2006
APW Tank Bottoms	1,1-Dichloroethene	C6L050260001	0.2	0.1	mg/L	U	0.2			Fresno	2006
APW Tank Bottoms	1,1-Dichloroethene	C8A110289001	0.2	0.1	mg/L	U	0.2			Sacramento	2008
APW Tank Bottoms	1,1-Dichloroethene	C8E080389001	0.2	0.1	mg/L	U	0.2			El Monte	2008
APW Tank Bottoms	1,1-Dichloroethene	C8E080390001	0.2	0.1	mg/L	U	0.2			El Monte	2008
APW Tank Bottoms	1,1-Dichloroethene	C8G220112001	0.2	0.1	mg/L	U	0.2			Highland	2008
APW Tank Bottoms	1,1-Dichloroethene	C8L030200001	0.2	0.1	mg/L	U	0.2			Fresno	2008
APW Tank Bottoms	1,1-Dichloroethene	C9D010186001	0.2	0.1	mg/L	U	0.2			El Monte	2009
APW Tank Bottoms	1,1-Dichloroethene	C0C300517001	0.2	0.1	mg/L	U	0.2			El Monte	2010
APW Tank Bottoms	1,1-Dichloroethene	C9J160264001	0.2	0.1	mg/L	U	0.2			Highland	2010
APW Tank Bottoms	1,1-Dichloroethene	C9K050460001	0.2	0.1	mg/L	U	0.2			Fresno	2010
APW Tank Bottoms	1,1-Dichloroethene	C0J110402002	0.2	0.1	mg/L	U	0.2			Sacramento	2010
APW Tank Bottoms	1,1-Dichloroethene	C0J150414001	0.2	0.1	mg/L	U	0.2			Highland	2010
APW Tank Bottoms	1,1-Dichloroethene	C0K050586001	0.2	0.1	mg/L	U	0.2			Fresno	2010
APW Tank Bottoms	1,1-Dichloroethene	180-1932-1	0.2	0.1	mg/L	U	0.2			Los Angeles	2011
APW Tank Bottoms	1,1-Dichloroethene	180-15368-1	0.2	0.1	mg/L	U	0.2			Highland	2012
APW Tank Bottoms	1,1-Dichloroethene	180-17242-1	0.2	0.1	mg/L	U	0.2			Fresno	2012
APW Tank Bottoms	1,1-Dichloroethene	180-11547-1	0.2	0.1	mg/L	U	0.2			Los Angeles	2012
APW Tank Bottoms	1,1-Dichloroethene	180-11254-1	0.2	0.1	mg/L	U	0.2			Santa Ana	2012
APW Tank Bottoms	1,1-Dichloroethene	180-4418-1	0.2	0.1	mg/L	U	0.2			Highland	2012
APW Tank Bottoms	1,1-Dichloroethene	180-5303-1	0.2	0.1	mg/L	U H	0.2			Highland	2012
APW Tank Bottoms	1,1-Dichloroethene	180-4700-1	0.2	0.1	mg/L	U	0.2			Fresno	2012
APW Tank Bottoms	1,1-Dichloroethene	180-9155-1	0.2	0.1	mg/L	U	0.2			El Monte	2012
APW Tank Bottoms	1,1-Dichloroethene	180-26073-1	0.2	0.1	mg/L	U	200			Highland	2013
APW Tank Bottoms	1,1-Dichloroethene	180-26876-1	0.2	0.1	mg/L	U	0.2			Fresno	2013
APW Tank Bottoms	1,1-Dichloroethene	180-30866-1	0.2	0.1	mg/L	U	0.2			Sacramento	2014
APW Tank Bottoms	1,1-Dichloroethene	180-38043-1	0.2	0.1	mg/L	U	0.2			Fresno	2014
APW Tank Bottoms	1,1-Dichloroethene	180-38676-1	0.2	0.1	mg/L	U	0.2	31	48	Highland	2014
APW Tank Bottoms	1,1-Dichloroethene	180-50275-1	0.2	0.1	mg/L	U	0.2			Los Angeles	2015
APW Tank Bottoms	1,1-Dichloroethene	180-58154-1	0.2	0.1	mg/L	U	0.2			Santa Ana	2016
APW Tank Bottoms	1,1-Dichloroethene	180-70385-1	0.2	0.1	mg/L	U	0.2			Los Angeles	2017
APW Tank Bottoms	1,1-Dichloroethene	180-67797-1	0.2	0.1	mg/L	U	0.2			Santa Ana	2017
APW Tank Bottoms	1,1-Dichloroethene	180-60019-1	0.2	0.1	mg/L	U	0.2			Fresno	2017
APW Tank Bottoms	1,1-Dichloroethene	180-61551-1	0.2	0.1	mg/L	U	0.2			Los Angeles	2017
APW Tank Bottoms	1,1-Dichloroethene	180-81780-1	0.2	0.1	mg/L	U	0.2			Los Angeles	2018

MATRIX	PARAMETER	LAB ID	RESULT	RANKED DATA	UNITS	QUALIFIER	REPORTING LIMIT	Uth VALUE	COUNT	FACILITY	YEAR
APW Tank Bottoms	1,1-Dichloroethene	180-80850-1	0.2	0.1	mg/L	U	0.2			Sacramento	2018
APW Tank Bottoms	1,1-Dichloroethene	180-78622-1	0.2	0.1	mg/L	U	0.2			Santa Ana	2018
APW Tank Bottoms	1,1-Dichloroethene	C8H150273001	0.25	0.125	mg/L	U	0.25			Los Angeles	2008
APW Tank Bottoms	1,1-Dichloroethene	440-54550-1	0.4	0.2	mg/L	U	0.2			Los Angeles	2013
APW Tank Bottoms	1,1-Dichloroethene	C0F220561001	0.5	0.25	mg/L	U	0.5			El Monte	2010
APW Tank Bottoms	1,1-Dichloroethene	C0F220562001	0.5	0.25	mg/L	U	0.5			Los Angeles	2010
APW Tank Bottoms	1,1-Dichloroethene	C1D010430001	0.5	0.25	mg/L	U	0.5			El Monte	2011
APW Tank Bottoms	1,1-Dichloroethene	C9H130286001	1	0.5	mg/L	U	1			Los Angeles	2009
APW Tank Bottoms	1,1-Dichloroethene	C9H130284001	1.2	0.6	mg/L	U	1.2			El Monte	2009
APW Tank Bottoms	1,1-Dichloroethene	180-50336-1	100	50	mg/L	U	100			Fresno	2015
APW Tank Bottoms	1,2-Dichloroethane	C6C310223001	0.05	0.025	mg/L	U	0.05			Highland	2006
APW Tank Bottoms	1,2-Dichloroethane	C6I150307001	0.05	0.025	mg/L	U	0.05			El Monte	2006
APW Tank Bottoms	1,2-Dichloroethane	C9G310286001	0.05	0.025	mg/L	U	0.05			El Monte	2009
APW Tank Bottoms	1,2-Dichloroethane	C6C150186001	0.2	0.1	mg/L	U	0.2			Oakland	2006
APW Tank Bottoms	1,2-Dichloroethane	C6L050260001	0.2	0.1	mg/L	U	0.2			Fresno	2006
APW Tank Bottoms	1,2-Dichloroethane	C8A110289001	0.2	0.1	mg/L	U	0.2			Sacramento	2008
APW Tank Bottoms	1,2-Dichloroethane	C8E080389001	0.2	0.1	mg/L	U	0.2			El Monte	2008
APW Tank Bottoms	1,2-Dichloroethane	C8E080390001	0.2	0.1	mg/L	U	0.2			El Monte	2008
APW Tank Bottoms	1,2-Dichloroethane	C8G220112001	0.2	0.1	mg/L	U	0.2			Highland	2008
APW Tank Bottoms	1,2-Dichloroethane	C8L030200001	0.2	0.1	mg/L	U	0.2			Fresno	2008
APW Tank Bottoms	1,2-Dichloroethane	C9D010186001	0.2	0.1	mg/L	U	0.2			El Monte	2009
APW Tank Bottoms	1,2-Dichloroethane	C0C300517001	0.2	0.1	mg/L	U	0.2			El Monte	2010
APW Tank Bottoms	1,2-Dichloroethane	C9J160264001	0.2	0.1	mg/L	U	0.2			Highland	2010
APW Tank Bottoms	1,2-Dichloroethane	C9K050460001	0.2	0.1	mg/L	U	0.2			Fresno	2010
APW Tank Bottoms	1,2-Dichloroethane	C0J110402002	0.2	0.1	mg/L	U	0.2			Sacramento	2010
APW Tank Bottoms	1,2-Dichloroethane	C0J150414001	0.2	0.1	mg/L	U	0.2			Highland	2010
APW Tank Bottoms	1,2-Dichloroethane	C0K050586001	0.2	0.1	mg/L	U	0.2			Fresno	2010
APW Tank Bottoms	1,2-Dichloroethane	180-1932-1	0.2	0.1	mg/L	U	0.2			Los Angeles	2011
APW Tank Bottoms	1,2-Dichloroethane	180-15368-1	0.2	0.1	mg/L	U	0.2			Highland	2012
APW Tank Bottoms	1,2-Dichloroethane	180-17242-1	0.2	0.1	mg/L	U	0.2			Fresno	2012
APW Tank Bottoms	1,2-Dichloroethane	180-11547-1	0.2	0.1	mg/L	U	0.2			Los Angeles	2012
APW Tank Bottoms	1,2-Dichloroethane	180-11254-1	0.2	0.1	mg/L	U	0.2			Santa Ana	2012
APW Tank Bottoms	1,2-Dichloroethane	180-4418-1	0.2	0.1	mg/L	U	0.2			Highland	2012
APW Tank Bottoms	1,2-Dichloroethane	180-5303-1	0.2	0.1	mg/L	U H	0.2			Highland	2012
APW Tank Bottoms	1,2-Dichloroethane	180-4700-1	0.2	0.1	mg/L	U	0.2			Fresno	2012
APW Tank Bottoms	1,2-Dichloroethane	180-9155-1	0.2	0.1	mg/L	U	0.2			El Monte	2012
APW Tank Bottoms	1,2-Dichloroethane	180-26073-1	0.2	0.1	mg/L	U	200			Highland	2013
APW Tank Bottoms	1,2-Dichloroethane	180-26876-1	0.2	0.1	mg/L	U	0.2			Fresno	2013

MATRIX	PARAMETER	LAB ID	RESULT	RANKED DATA	UNITS	QUALIFIER	REPORTING LIMIT	Uth VALUE	COUNT	FACILITY	YEAR
APW Tank Bottoms	1,2-Dichloroethane	180-30866-1	0.2	0.1	mg/L	U	0.2			Sacramento	2014
APW Tank Bottoms	1,2-Dichloroethane	180-38043-1	0.2	0.1	mg/L	U	0.2			Fresno	2014
APW Tank Bottoms	1,2-Dichloroethane	180-38676-1	0.2	0.1	mg/L	U	0.2	31	48	Highland	2014
APW Tank Bottoms	1,2-Dichloroethane	180-50275-1	0.2	0.1	mg/L	U	0.2			Los Angeles	2015
APW Tank Bottoms	1,2-Dichloroethane	180-58154-1	0.2	0.1	mg/L	U	0.2			Santa Ana	2016
APW Tank Bottoms	1,2-Dichloroethane	180-70385-1	0.2	0.1	mg/L	U	0.2			Los Angeles	2017
APW Tank Bottoms	1,2-Dichloroethane	180-67797-1	0.2	0.1	mg/L	U	0.2			Santa Ana	2017
APW Tank Bottoms	1,2-Dichloroethane	180-60019-1	0.2	0.1	mg/L	U	0.2			Fresno	2017
APW Tank Bottoms	1,2-Dichloroethane	180-61551-1	0.2	0.1	mg/L	U	0.2			Los Angeles	2017
APW Tank Bottoms	1,2-Dichloroethane	180-81780-1	0.2	0.1	mg/L	U	0.2			Los Angeles	2018
APW Tank Bottoms	1,2-Dichloroethane	180-80850-1	0.2	0.1	mg/L	U	0.2			Sacramento	2018
APW Tank Bottoms	1,2-Dichloroethane	180-78622-1	0.2	0.1	mg/L	U	0.2			Santa Ana	2018
APW Tank Bottoms	1,2-Dichloroethane	C8H150273001	0.25	0.125	mg/L	U	0.25			Los Angeles	2008
APW Tank Bottoms	1,2-Dichloroethane	440-54550-1	0.4	0.2	mg/L	U	0.2			Los Angeles	2013
APW Tank Bottoms	1,2-Dichloroethane	C0F220561001	0.5	0.25	mg/L	U	0.5			El Monte	2010
APW Tank Bottoms	1,2-Dichloroethane	C0F220562001	0.5	0.25	mg/L	U	0.5			Los Angeles	2010
APW Tank Bottoms	1,2-Dichloroethane	C1D010430001	0.5	0.25	mg/L	U	0.5			El Monte	2011
APW Tank Bottoms	1,2-Dichloroethane	C9H130286001	1	0.5	mg/L	U	1			Los Angeles	2009
APW Tank Bottoms	1,2-Dichloroethane	C9H130284001	1.2	0.6	mg/L	U	1.2			El Monte	2009
APW Tank Bottoms	1,2-Dichloroethane	180-50336-1	100	50	mg/L	U	100			Fresno	2015
APW Tank Bottoms	1,4-Dichlorobenzene	440-54550-1	0.004	0.002	mg/L	U	50			Los Angeles	2013
APW Tank Bottoms	1,4-Dichlorobenzene	C6C310223001	0.05	0.025	mg/L	U	0.05			Highland	2006
APW Tank Bottoms	1,4-Dichlorobenzene	C6I150307001	0.05	0.025	mg/L	U	0.05			El Monte	2006
APW Tank Bottoms	1,4-Dichlorobenzene	C9G310286001	0.05	0.025	mg/L	U	0.05			El Monte	2009
APW Tank Bottoms	1,4-Dichlorobenzene	180-17242-1	0.05	0.025	mg/L	U	0.05			Fresno	2012
APW Tank Bottoms	1,4-Dichlorobenzene	C6C150186001	0.2	0.1	mg/L	U	0.2			Oakland	2006
APW Tank Bottoms	1,4-Dichlorobenzene	C6L050260001	0.2	0.1	mg/L	U	0.2			Fresno	2006
APW Tank Bottoms	1,4-Dichlorobenzene	C8A110289001	0.2	0.1	mg/L	U	0.2			Sacramento	2008
APW Tank Bottoms	1,4-Dichlorobenzene	C8E080389001	0.2	0.1	mg/L	U	0.2			El Monte	2008
APW Tank Bottoms	1,4-Dichlorobenzene	C8E080390001	0.2	0.1	mg/L	U	0.2			El Monte	2008
APW Tank Bottoms	1,4-Dichlorobenzene	C8G220112001	0.2	0.1	mg/L	U	0.2			Highland	2008
APW Tank Bottoms	1,4-Dichlorobenzene	C8L030200001	0.2	0.1	mg/L	U	0.2			Fresno	2008
APW Tank Bottoms	1,4-Dichlorobenzene	C9D010186001	0.2	0.1	mg/L	U	0.2			El Monte	2009
APW Tank Bottoms	1,4-Dichlorobenzene	C0C300517001	0.2	0.1	mg/L	U	0.2			El Monte	2010
APW Tank Bottoms	1,4-Dichlorobenzene	C9J160264001	0.2	0.1	mg/L	U	0.2			Highland	2010
APW Tank Bottoms	1,4-Dichlorobenzene	C9K050460001	0.2	0.1	mg/L	U	0.2			Fresno	2010
APW Tank Bottoms	1,4-Dichlorobenzene	C0J110402002	0.2	0.1	mg/L	U	0.2			Sacramento	2010
APW Tank Bottoms	1,4-Dichlorobenzene	C0J150414001	0.2	0.1	mg/L	U	0.2			Highland	2010

MATRIX	PARAMETER	LAB ID	RESULT	RANKED DATA	UNITS	QUALIFIER	REPORTING LIMIT	Uth VALUE	COUNT	FACILITY	YEAR
APW Tank Bottoms	1,4-Dichlorobenzene	C0K050586001	0.2	0.1	mg/L	U	0.2			Fresno	2010
APW Tank Bottoms	1,4-Dichlorobenzene	180-1932-1	0.2	0.1	mg/L	U	0.2			Los Angeles	2011
APW Tank Bottoms	1,4-Dichlorobenzene	180-4418-1	0.2	0.1	mg/L	U	0.2			Highland	2012
APW Tank Bottoms	1,4-Dichlorobenzene	180-5303-1	0.2	0.1	mg/L	U H	0.2			Highland	2012
APW Tank Bottoms	1,4-Dichlorobenzene	180-4700-1	0.2	0.1	mg/L	U	0.2			Fresno	2012
APW Tank Bottoms	1,4-Dichlorobenzene	180-26073-1	0.2	0.1	mg/L	U	200			Highland	2013
APW Tank Bottoms	1,4-Dichlorobenzene	180-26876-1	0.2	0.1	mg/L	U	0.2			Fresno	2013
APW Tank Bottoms	1,4-Dichlorobenzene	180-30866-1	0.2	0.1	mg/L	U	0.2			Sacramento	2014
APW Tank Bottoms	1,4-Dichlorobenzene	180-38043-1	0.2	0.1	mg/L	U	0.2			Fresno	2014
APW Tank Bottoms	1,4-Dichlorobenzene	180-38676-1	0.2	0.1	mg/L	U	0.2	31	48	Highland	2014
APW Tank Bottoms	1,4-Dichlorobenzene	180-50275-1	0.2	0.1	mg/L	U	0.2			Los Angeles	2015
APW Tank Bottoms	1,4-Dichlorobenzene	180-58154-1	0.2	0.1	mg/L	U	0.2			Santa Ana	2016
APW Tank Bottoms	1,4-Dichlorobenzene	180-70385-1	0.2	0.1	mg/L	U	0.2			Los Angeles	2017
APW Tank Bottoms	1,4-Dichlorobenzene	180-67797-1	0.2	0.1	mg/L	U	0.2			Santa Ana	2017
APW Tank Bottoms	1,4-Dichlorobenzene	180-60019-1	0.2	0.1	mg/L	U	0.2			Fresno	2017
APW Tank Bottoms	1,4-Dichlorobenzene	180-61551-1	0.2	0.1	mg/L	U	0.2			Los Angeles	2017
APW Tank Bottoms	1,4-Dichlorobenzene	180-81780-1	0.2	0.1	mg/L	U	0.2			Los Angeles	2018
APW Tank Bottoms	1,4-Dichlorobenzene	180-80850-1	0.2	0.1	mg/L	U	0.2			Sacramento	2018
APW Tank Bottoms	1,4-Dichlorobenzene	180-78622-1	0.2	0.1	mg/L	U	0.2			Santa Ana	2018
APW Tank Bottoms	1,4-Dichlorobenzene	C8H150273001	0.25	0.125	mg/L	U	0.25			Los Angeles	2008
APW Tank Bottoms	1,4-Dichlorobenzene	C0F220561001	0.5	0.25	mg/L	U	0.5			El Monte	2010
APW Tank Bottoms	1,4-Dichlorobenzene	C0F220562001	0.5	0.25	mg/L	U	0.5			Los Angeles	2010
APW Tank Bottoms	1,4-Dichlorobenzene	C1D010430001	0.5	0.25	mg/L	U	0.5			El Monte	2011
APW Tank Bottoms	1,4-Dichlorobenzene	C9H130286001	1	0.5	mg/L	U	1			Los Angeles	2009
APW Tank Bottoms	1,4-Dichlorobenzene	C9H130284001	1.2	0.6	mg/L	U	1.2			El Monte	2009
APW Tank Bottoms	1,4-Dichlorobenzene	180-50336-1	100	50	mg/L	U	100			Fresno	2015
APW Tank Bottoms	2,4,5-Trichlorophenol	C9D010186001	0.05	0.025	mg/L	U	0.05			El Monte	2009
APW Tank Bottoms	2,4,5-Trichlorophenol	180-17242-1	0.05	0.025	mg/L	U	0.05			Fresno	2012
APW Tank Bottoms	2,4,5-Trichlorophenol	180-38043-1	0.05	0.025	mg/L	U	0.05			Fresno	2014
APW Tank Bottoms	2,4,5-Trichlorophenol	180-38676-1	0.05	0.025	mg/L	U	0.05			Highland	2014
APW Tank Bottoms	2,4,5-Trichlorophenol	180-50275-1	0.05	0.025	mg/L	U	0.05			Los Angeles	2015
APW Tank Bottoms	2,4,5-Trichlorophenol	180-58154-1	0.05	0.025	mg/L	U	0.05			Santa Ana	2016
APW Tank Bottoms	2,4,5-Trichlorophenol	180-70385-1	0.05	0.025	mg/L	U	0.05			Los Angeles	2017
APW Tank Bottoms	2,4,5-Trichlorophenol	180-67797-1	0.05	0.025	mg/L	U	0.05			Santa Ana	2017
APW Tank Bottoms	2,4,5-Trichlorophenol	180-60019-1	0.05	0.025	mg/L	U	0.05			Fresno	2017
APW Tank Bottoms	2,4,5-Trichlorophenol	180-61551-1	0.05	0.025	mg/L	U	0.05			Los Angeles	2017
APW Tank Bottoms	2,4,5-Trichlorophenol	180-81780-1	0.05	0.025	mg/L	U	0.05			Los Angeles	2018
APW Tank Bottoms	2,4,5-Trichlorophenol	180-80850-1	0.05	0.025	mg/L	U	0.05			Sacramento	2018

MATRIX	PARAMETER	LAB ID	RESULT	RANKED DATA	UNITS	QUALIFIER	REPORTING LIMIT	Uth VALUE	COUNT	FACILITY	YEAR
APW Tank Bottoms	2,4,5-Trichlorophenol	180-78622-1	0.05	0.025	mg/L	U	0.05			Santa Ana	2018
APW Tank Bottoms	2,4,5-Trichlorophenol	C6C150186001	0.1	0.05	mg/L	U	0.1			Oakland	2006
APW Tank Bottoms	2,4,5-Trichlorophenol	C6C310223001	0.1	0.05	mg/L	U	0.1			Highland	2006
APW Tank Bottoms	2,4,5-Trichlorophenol	C6I150307001	0.1	0.05	mg/L	U	0.1			El Monte	2006
APW Tank Bottoms	2,4,5-Trichlorophenol	C6L050260001	0.1	0.05	mg/L	U	0.1			Fresno	2006
APW Tank Bottoms	2,4,5-Trichlorophenol	180-50336-2	0.6	0.6	mg/L		0.13			Fresno	2015
APW Tank Bottoms	2,4,5-Trichlorophenol	C8H150273001	400	200	mg/L	U	400			Los Angeles	2008
APW Tank Bottoms	2,4,5-Trichlorophenol	C1D010430001	400	200	mg/L	U	400	15	20	El Monte	2011
APW Tank Bottoms	2,4,6-Trichlorophenol	C9D010186001	0.05	0.025	mg/L	U	0.05			El Monte	2009
APW Tank Bottoms	2,4,6-Trichlorophenol	180-17242-1	0.05	0.025	mg/L	U	0.05			Fresno	2012
APW Tank Bottoms	2,4,6-Trichlorophenol	180-38043-1	0.05	0.025	mg/L	U	0.05			Fresno	2014
APW Tank Bottoms	2,4,6-Trichlorophenol	180-38676-1	0.05	0.025	mg/L	U	0.05			Highland	2014
APW Tank Bottoms	2,4,6-Trichlorophenol	180-50275-1	0.05	0.025	mg/L	U	0.05			Los Angeles	2015
APW Tank Bottoms	2,4,6-Trichlorophenol	180-58154-1	0.05	0.025	mg/L	U	0.05			Santa Ana	2016
APW Tank Bottoms	2,4,6-Trichlorophenol	180-70385-1	0.05	0.025	mg/L	U	0.05			Los Angeles	2017
APW Tank Bottoms	2,4,6-Trichlorophenol	180-67797-1	0.05	0.025	mg/L	U	0.05			Santa Ana	2017
APW Tank Bottoms	2,4,6-Trichlorophenol	180-60019-1	0.05	0.025	mg/L	U	0.05			Fresno	2017
APW Tank Bottoms	2,4,6-Trichlorophenol	180-61551-1	0.05	0.025	mg/L	U	0.05			Los Angeles	2017
APW Tank Bottoms	2,4,6-Trichlorophenol	180-81780-1	0.05	0.025	mg/L	U	0.05			Los Angeles	2018
APW Tank Bottoms	2,4,6-Trichlorophenol	180-80850-1	0.05	0.025	mg/L	U	0.05			Sacramento	2018
APW Tank Bottoms	2,4,6-Trichlorophenol	180-78622-1	0.05	0.025	mg/L	U	0.05			Santa Ana	2018
APW Tank Bottoms	2,4,6-Trichlorophenol	C6C150186001	0.1	0.05	mg/L	U	0.1			Oakland	2006
APW Tank Bottoms	2,4,6-Trichlorophenol	C6C310223001	0.1	0.05	mg/L	U	0.1	15	20	Highland	2006
APW Tank Bottoms	2,4,6-Trichlorophenol	C6I150307001	0.1	0.05	mg/L	U	0.1			El Monte	2006
APW Tank Bottoms	2,4,6-Trichlorophenol	C6L050260001	0.1	0.05	mg/L	U	0.1			Fresno	2006
APW Tank Bottoms	2,4,6-Trichlorophenol	180-50336-2	0.13	0.065	mg/L	U	0.13			Fresno	2015
APW Tank Bottoms	2,4,6-Trichlorophenol	C8H150273001	2	1	mg/L	U	2			Los Angeles	2008
APW Tank Bottoms	2,4,6-Trichlorophenol	C1D010430001	2	1	mg/L	U	2			El Monte	2011
APW Tank Bottoms	2,4-Dinitrotoluene	C9D010186001	0.05	0.025	mg/L	U	0.05			El Monte	2009
APW Tank Bottoms	2,4-Dinitrotoluene	180-17242-1	0.05	0.025	mg/L	U	0.05			Fresno	2012
APW Tank Bottoms	2,4-Dinitrotoluene	180-38043-1	0.05	0.025	mg/L	U	0.05			Fresno	2014
APW Tank Bottoms	2,4-Dinitrotoluene	180-38676-1	0.05	0.025	mg/L	U	0.05			Highland	2014
APW Tank Bottoms	2,4-Dinitrotoluene	180-50275-1	0.05	0.025	mg/L	U	0.05			Los Angeles	2015
APW Tank Bottoms	2,4-Dinitrotoluene	180-58154-1	0.05	0.025	mg/L	U	0.05			Santa Ana	2016
APW Tank Bottoms	2,4-Dinitrotoluene	180-70385-1	0.05	0.025	mg/L	U	0.05			Los Angeles	2017
APW Tank Bottoms	2,4-Dinitrotoluene	180-67797-1	0.05	0.025	mg/L	U	0.05			Santa Ana	2017
APW Tank Bottoms	2,4-Dinitrotoluene	180-60019-1	0.05	0.025	mg/L	U	0.05			Fresno	2017
APW Tank Bottoms	2,4-Dinitrotoluene	180-61551-1	0.05	0.025	mg/L	U	0.05			Los Angeles	2017

MATRIX	PARAMETER	LAB ID	RESULT	RANKED DATA	UNITS	QUALIFIER	REPORTING LIMIT	Uth VALUE	COUNT	FACILITY	YEAR
APW Tank Bottoms	2,4-Dinitrotoluene	180-81780-1	0.05	0.025	mg/L	U	0.05			Los Angeles	2018
APW Tank Bottoms	2,4-Dinitrotoluene	180-80850-1	0.05	0.025	mg/L	U	0.05			Sacramento	2018
APW Tank Bottoms	2,4-Dinitrotoluene	180-78622-1	0.05	0.025	mg/L	U	0.05			Santa Ana	2018
APW Tank Bottoms	2,4-Dinitrotoluene	C6C150186001	0.1	0.05	mg/L	U	0.1			Oakland	2006
APW Tank Bottoms	2,4-Dinitrotoluene	C6C310223001	0.1	0.05	mg/L	U	0.1	15	20	Highland	2006
APW Tank Bottoms	2,4-Dinitrotoluene	C6I150307001	0.1	0.05	mg/L	U	0.1			El Monte	2006
APW Tank Bottoms	2,4-Dinitrotoluene	C6L050260001	0.1	0.05	mg/L	U	0.1			Fresno	2006
APW Tank Bottoms	2,4-Dinitrotoluene	C8H150273001	0.13	0.065	mg/L	U	0.13			Los Angeles	2008
APW Tank Bottoms	2,4-Dinitrotoluene	C1D010430001	0.13	0.065	mg/L	U	0.13			El Monte	2011
APW Tank Bottoms	2,4-Dinitrotoluene	180-50336-2	0.13	0.065	mg/L	U	0.13			Fresno	2015
APW Tank Bottoms	2-Butanone (MEK)	C6C310223001	0.05	0.025	mg/L	U	0.05			Highland	2006
APW Tank Bottoms	2-Butanone (MEK)	C6I150307001	0.05	0.025	mg/L	U	0.05			El Monte	2006
APW Tank Bottoms	2-Butanone (MEK)	C9G310286001	0.069	0.069	mg/L		0.05			El Monte	2009
APW Tank Bottoms	2-Butanone (MEK)	C6C150186001	0.2	0.1	mg/L	U	0.2			Oakland	2006
APW Tank Bottoms	2-Butanone (MEK)	C6L050260001	0.2	0.1	mg/L	U	0.2			Fresno	2006
APW Tank Bottoms	2-Butanone (MEK)	C8E080389001	0.2	0.1	mg/L	U	0.2			El Monte	2008
APW Tank Bottoms	2-Butanone (MEK)	C8E080390001	0.2	0.1	mg/L	U	0.2			El Monte	2008
APW Tank Bottoms	2-Butanone (MEK)	C8G220112001	0.2	0.1	mg/L	U	0.2			Highland	2008
APW Tank Bottoms	2-Butanone (MEK)	C8L030200001	0.2	0.1	mg/L	U	0.2			Fresno	2008
APW Tank Bottoms	2-Butanone (MEK)	C9D010186001	0.2	0.1	mg/L	U	0.2			El Monte	2009
APW Tank Bottoms	2-Butanone (MEK)	C9J160264001	0.2	0.1	mg/L	U	0.2			Highland	2010
APW Tank Bottoms	2-Butanone (MEK)	C9K050460001	0.2	0.1	mg/L	U	0.2			Fresno	2010
APW Tank Bottoms	2-Butanone (MEK)	C0J150414001	0.2	0.1	mg/L	U	0.2			Highland	2010
APW Tank Bottoms	2-Butanone (MEK)	C0K050586001	0.2	0.1	mg/L	U	0.2			Fresno	2010
APW Tank Bottoms	2-Butanone (MEK)	180-1932-1	0.2	0.1	mg/L	U	0.2			Los Angeles	2011
APW Tank Bottoms	2-Butanone (MEK)	180-15368-1	0.2	0.1	mg/L	U	0.2			Highland	2012
APW Tank Bottoms	2-Butanone (MEK)	180-17242-1	0.2	0.1	mg/L	U	0.2			Fresno	2012
APW Tank Bottoms	2-Butanone (MEK)	180-11547-1	0.2	0.1	mg/L	U	0.2			Los Angeles	2012
APW Tank Bottoms	2-Butanone (MEK)	180-11254-1	0.2	0.1	mg/L	U	0.2			Santa Ana	2012
APW Tank Bottoms	2-Butanone (MEK)	180-4418-1	0.2	0.1	mg/L	U	0.2			Highland	2012
APW Tank Bottoms	2-Butanone (MEK)	180-5303-1	0.2	0.1	mg/L	U H	0.2			Highland	2012
APW Tank Bottoms	2-Butanone (MEK)	180-9155-1	0.2	0.1	mg/L	U	0.2			El Monte	2012
APW Tank Bottoms	2-Butanone (MEK)	180-26073-1	0.2	0.1	mg/L	U	200			Highland	2013
APW Tank Bottoms	2-Butanone (MEK)	180-26876-1	0.2	0.1	mg/L	U	0.2			Fresno	2013
APW Tank Bottoms	2-Butanone (MEK)	180-38676-1	0.2	0.1	mg/L	U	0.2			Highland	2014
APW Tank Bottoms	2-Butanone (MEK)	180-30866-1	0.2	0.1	mg/L	U	0.2			Sacramento	2014
APW Tank Bottoms	2-Butanone (MEK)	180-38043-1	0.2	0.1	mg/L	U	0.2			Fresno	2014
APW Tank Bottoms	2-Butanone (MEK)	180-50275-1	0.2	0.1	mg/L	U	0.2			Los Angeles	2015

MATRIX	PARAMETER	LAB ID	RESULT	RANKED DATA	UNITS	QUALIFIER	REPORTING LIMIT	Uth VALUE	COUNT	FACILITY	YEAR
APW Tank Bottoms	2-Butanone (MEK)	180-58154-1	0.2	0.1	mg/L	U	0.2			Santa Ana	2016
APW Tank Bottoms	2-Butanone (MEK)	180-70385-1	0.2	0.1	mg/L	U	0.2	30	47	Los Angeles	2017
APW Tank Bottoms	2-Butanone (MEK)	180-67797-1	0.2	0.1	mg/L	U	0.2			Santa Ana	2017
APW Tank Bottoms	2-Butanone (MEK)	180-60019-1	0.2	0.1	mg/L	U	0.2			Fresno	2017
APW Tank Bottoms	2-Butanone (MEK)	180-61551-1	0.2	0.1	mg/L	U	0.2			Los Angeles	2017
APW Tank Bottoms	2-Butanone (MEK)	180-81780-1	0.2	0.1	mg/L	U	0.2			Los Angeles	2018
APW Tank Bottoms	2-Butanone (MEK)	180-80850-1	0.2	0.1	mg/L	U	0.2			Sacramento	2018
APW Tank Bottoms	2-Butanone (MEK)	180-78622-1	0.2	0.1	mg/L	U	0.2			Santa Ana	2018
APW Tank Bottoms	2-Butanone (MEK)	C8H150273001	0.25	0.125	mg/L	U	0.25			Los Angeles	2008
APW Tank Bottoms	2-Butanone (MEK)	C0F220562001	0.5	0.25	mg/L	U	0.5			Los Angeles	2010
APW Tank Bottoms	2-Butanone (MEK)	C1D010430001	0.5	0.25	mg/L	U	0.5			El Monte	2011
APW Tank Bottoms	2-Butanone (MEK)	180-4700-1	0.28	0.28	mg/L		0.2			Fresno	2012
APW Tank Bottoms	2-Butanone (MEK)	C9H130286001	1	0.5	mg/L	U	1			Los Angeles	2009
APW Tank Bottoms	2-Butanone (MEK)	C9H130284001	1.2	0.6	mg/L	U	1.2			El Monte	2009
APW Tank Bottoms	2-Butanone (MEK)	C0J110402002	0.74	0.74	mg/L		0.2			Sacramento	2010
APW Tank Bottoms	2-Butanone (MEK)	C8A110289001	0.76	0.76	mg/L		0.2			Sacramento	2008
APW Tank Bottoms	2-Butanone (MEK)	C0F220561001	0.78	0.78	mg/L		0.5			El Monte	2010
APW Tank Bottoms	2-Butanone (MEK)	C0C300517001	3.4	3.4	mg/L		0.2			El Monte	2010
APW Tank Bottoms	2-Butanone (MEK)	180-50336-1	100	50	mg/L	U	100			Fresno	2015
APW Tank Bottoms	2-Methylphenol	C9D010186001	0.05	0.025	mg/L	U	0.05			El Monte	2009
APW Tank Bottoms	2-Methylphenol	180-17242-1	0.05	0.025	mg/L	U	0.05			Fresno	2012
APW Tank Bottoms	2-Methylphenol	180-38043-1	0.05	0.025	mg/L	U	0.05			Fresno	2014
APW Tank Bottoms	2-Methylphenol	180-38676-1	0.05	0.025	mg/L	U	0.05			Highland	2014
APW Tank Bottoms	2-Methylphenol	180-50275-1	0.05	0.025	mg/L	U	0.05			Los Angeles	2015
APW Tank Bottoms	2-Methylphenol	180-58154-1	0.05	0.025	mg/L	U	0.05			Santa Ana	2016
APW Tank Bottoms	2-Methylphenol	180-70385-1	0.05	0.025	mg/L	U	0.05			Los Angeles	2017
APW Tank Bottoms	2-Methylphenol	180-67797-1	0.05	0.025	mg/L	U	0.05			Santa Ana	2017
APW Tank Bottoms	2-Methylphenol	180-60019-1	0.05	0.025	mg/L	U	0.05			Fresno	2017
APW Tank Bottoms	2-Methylphenol	180-61551-1	0.05	0.025	mg/L	U	0.05			Los Angeles	2017
APW Tank Bottoms	2-Methylphenol	180-81780-1	0.05	0.025	mg/L	U	0.05			Los Angeles	2018
APW Tank Bottoms	2-Methylphenol	180-80850-1	0.05	0.025	mg/L	U	0.05			Sacramento	2018
APW Tank Bottoms	2-Methylphenol	180-78622-1	0.05	0.025	mg/L	U	0.05			Santa Ana	2018
APW Tank Bottoms	2-Methylphenol	C6C150186001	0.1	0.05	mg/L	U	0.1			Oakland	2006
APW Tank Bottoms	2-Methylphenol	C6C310223001	0.1	0.05	mg/L	U	0.1	15	20	Highland	2006
APW Tank Bottoms	2-Methylphenol	C6I150307001	0.1	0.05	mg/L	U	0.1			El Monte	2006
APW Tank Bottoms	2-Methylphenol	C6L050260001	0.1	0.05	mg/L	U	0.1			Fresno	2006
APW Tank Bottoms	2-Methylphenol	C8H150273001	0.1	0.05	mg/L	U	0.1			Los Angeles	2008
APW Tank Bottoms	2-Methylphenol	C1D010430001	1	0.5	mg/L	U	1			El Monte	2011

MATRIX	PARAMETER	LAB ID	RESULT	RANKED DATA	UNITS	QUALIFIER	REPORTING LIMIT	Uth VALUE	COUNT	FACILITY	YEAR
APW Tank Bottoms	2-Methylphenol	180-50336-2	1	0.5	mg/L	U	1			Fresno	2015
APW Tank Bottoms	Arsenic	180-17242-1	0.01	0.01	mg/L	J B	0.05			Fresno	2012
APW Tank Bottoms	Arsenic	180-15368-1	0.018	0.018	mg/L	J	0.05			Highland	2012
APW Tank Bottoms	Arsenic	C9G310286001	0.05	0.025	mg/L	U	0.05			El Monte	2009
APW Tank Bottoms	Arsenic	C9J160264001	0.05	0.025	mg/L	U	0.05			Highland	2010
APW Tank Bottoms	Arsenic	C9K050460001	0.05	0.025	mg/L	U	0.05			Fresno	2010
APW Tank Bottoms	Arsenic	C0J110402002	0.05	0.025	mg/L	U	0.05			Sacramento	2010
APW Tank Bottoms	Arsenic	C0J150414001	0.05	0.025	mg/L	U	0.05			Highland	2010
APW Tank Bottoms	Arsenic	C0K050586001	0.05	0.025	mg/L	U	0.05			Fresno	2010
APW Tank Bottoms	Arsenic	180-11547-1	0.035	0.035	mg/L	J	0.1			Los Angeles	2012
APW Tank Bottoms	Arsenic	180-4418-1	0.049	0.049	mg/L	J	0.1			Highland	2012
APW Tank Bottoms	Arsenic	C8E080389001	0.1	0.05	mg/L	U	0.1			El Monte	2008
APW Tank Bottoms	Arsenic	C8E080390001	0.1	0.05	mg/L	U	0.1			El Monte	2008
APW Tank Bottoms	Arsenic	C9H130284001	0.1	0.05	mg/L	U	0.1			El Monte	2009
APW Tank Bottoms	Arsenic	180-11254-1	0.1	0.05	mg/L	U	0.1			Santa Ana	2012
APW Tank Bottoms	Arsenic	180-5303-1	0.1	0.05	mg/L	U	0.1			Highland	2012
APW Tank Bottoms	Arsenic	180-78622-1	0.053	0.053	mg/L	J	0.1			Santa Ana	2018
APW Tank Bottoms	Arsenic	180-67797-1	0.063	0.063	mg/L	J	0.1			Santa Ana	2017
APW Tank Bottoms	Arsenic	180-58154-1	0.077	0.077	mg/L	J	0.1			Santa Ana	2016
APW Tank Bottoms	Arsenic	180-1932-1	0.08	0.08	mg/L	J	0.1			Los Angeles	2011
APW Tank Bottoms	Arsenic	440-54550-1	0.2	0.1	mg/L	U	0.1			Los Angeles	2013
APW Tank Bottoms	Arsenic	C0C300517001	0.11	0.11	mg/L		0.1			El Monte	2010
APW Tank Bottoms	Arsenic	C0F220561001	0.11	0.11	mg/L		0.1			El Monte	2010
APW Tank Bottoms	Arsenic	180-9155-1	0.25	0.125	mg/L	U	0.25			El Monte	2012
APW Tank Bottoms	Arsenic	C0F220562001	0.13	0.13	mg/L		0.1			Los Angeles	2010
APW Tank Bottoms	Arsenic	180-80850-1	0.2	0.2	mg/L		0.1			Sacramento	2018
APW Tank Bottoms	Arsenic	C6C150186001	0.5	0.25	mg/L	U	0.5			Oakland	2006
APW Tank Bottoms	Arsenic	C6C310223001	0.5	0.25	mg/L	U	0.5			Highland	2006
APW Tank Bottoms	Arsenic	C6I150307001	0.5	0.25	mg/L	U	0.5			El Monte	2006
APW Tank Bottoms	Arsenic	C6L050260001	0.5	0.25	mg/L	U	0.5			Fresno	2006
APW Tank Bottoms	Arsenic	C8A110289001	0.5	0.25	mg/L	U	0.5			Sacramento	2008
APW Tank Bottoms	Arsenic	C8G220112001	0.5	0.25	mg/L	U	0.5	31	48	Highland	2008
APW Tank Bottoms	Arsenic	C8L030200001	0.5	0.25	mg/L	U	0.5			Fresno	2008
APW Tank Bottoms	Arsenic	C9D010186001	0.5	0.25	mg/L	U	0.5			El Monte	2009
APW Tank Bottoms	Arsenic	180-26073-1	0.5	0.25	mg/L	U	0.5			Highland	2013
APW Tank Bottoms	Arsenic	180-26876-1	0.5	0.25	mg/L	U	0.5			Fresno	2013
APW Tank Bottoms	Arsenic	180-30866-1	0.5	0.25	mg/L	U	0.5			Sacramento	2014
APW Tank Bottoms	Arsenic	180-38043-1	0.5	0.25	mg/L	U	0.5			Fresno	2014

MATRIX	PARAMETER	LAB ID	RESULT	RANKED DATA	UNITS	QUALIFIER	REPORTING LIMIT	Uth VALUE	COUNT	FACILITY	YEAR
APW Tank Bottoms	Arsenic	180-50336-1	0.5	0.25	mg/L	U	0.5			Fresno	2015
APW Tank Bottoms	Arsenic	180-50275-1	0.5	0.25	mg/L	U	0.5			Los Angeles	2015
APW Tank Bottoms	Arsenic	180-70385-1	0.5	0.25	mg/L	U	0.5			Los Angeles	2017
APW Tank Bottoms	Arsenic	180-60019-1	0.5	0.25	mg/L	U	0.5			Fresno	2017
APW Tank Bottoms	Arsenic	180-61551-1	0.5	0.25	mg/L	U	0.5			Los Angeles	2017
APW Tank Bottoms	Arsenic	180-81780-1	0.5	0.25	mg/L	U	0.5			Los Angeles	2018
APW Tank Bottoms	Arsenic	C8H150273001	1	0.5	mg/L	U	1			Los Angeles	2008
APW Tank Bottoms	Arsenic	C1D010430001	1	0.5	mg/L	U	1			El Monte	2011
APW Tank Bottoms	Arsenic	180-38676-1	1	0.5	mg/L	U	1			Highland	2014
APW Tank Bottoms	Arsenic	C9H130286001	0.74	0.74	mg/L		0.1			Los Angeles	2009
APW Tank Bottoms	Arsenic	180-4700-1	0.77	0.77	mg/L		0.1			Fresno	2012
APW Tank Bottoms	Barium	180-67797-1	0.27	0.27	mg/L	J	2			Santa Ana	2017
APW Tank Bottoms	Barium	180-78622-1	0.27	0.27	mg/L	J	2			Santa Ana	2018
APW Tank Bottoms	Barium	180-58154-1	0.32	0.32	mg/L	J	2			Santa Ana	2016
APW Tank Bottoms	Barium	180-30866-1	0.5	0.5	mg/L	J B	2			Sacramento	2014
APW Tank Bottoms	Barium	180-50336-1	0.52	0.52	mg/L	J B	10			Fresno	2015
APW Tank Bottoms	Barium	C0J110402002	0.68	0.68	mg/L		0.2			Sacramento	2010
APW Tank Bottoms	Barium	440-54550-1	0.7	0.7	mg/L		2			Los Angeles	2013
APW Tank Bottoms	Barium	180-11254-1	0.81	0.81	mg/L	J	2			Santa Ana	2012
APW Tank Bottoms	Barium	C8E080389001	2	1	mg/L	U	2			El Monte	2008
APW Tank Bottoms	Barium	C8E080390001	2	1	mg/L	U	2			El Monte	2008
APW Tank Bottoms	Barium	180-60019-1	1.1	1.1	mg/L	J	2			Fresno	2017
APW Tank Bottoms	Barium	C9K050460001	1.2	1.2	mg/L		0.2			Fresno	2010
APW Tank Bottoms	Barium	180-11547-1	1.2	1.2	mg/L	J	2			Los Angeles	2012
APW Tank Bottoms	Barium	180-9155-1	1.3	1.3	mg/L		1			El Monte	2012
APW Tank Bottoms	Barium	180-38043-1	1.3	1.3	mg/L	J B	2			Fresno	2014
APW Tank Bottoms	Barium	180-61551-1	1.4	1.4	mg/L	J	2			Los Angeles	2017
APW Tank Bottoms	Barium	180-81780-1	1.4	1.4	mg/L	J	2			Los Angeles	2018
APW Tank Bottoms	Barium	180-4700-1	1.5	1.5	mg/L		50000			Fresno	2012
APW Tank Bottoms	Barium	180-70385-1	1.5	1.5	mg/L	J B	2			Los Angeles	2017
APW Tank Bottoms	Barium	C9J160264001	1.6	1.6	mg/L		0.2			Highland	2010
APW Tank Bottoms	Barium	C0K050586001	1.6	1.6	mg/L		0.2			Fresno	2010
APW Tank Bottoms	Barium	180-50275-1	1.6	1.6	mg/L	J B	2			Los Angeles	2015
APW Tank Bottoms	Barium	180-26876-1	1.7	1.7	mg/L	J	2			Fresno	2013
APW Tank Bottoms	Barium	C9G310286001	1.8	1.8	mg/L		0.2			El Monte	2009
APW Tank Bottoms	Barium	C0J150414001	1.8	1.8	mg/L		0.2			Highland	2010
APW Tank Bottoms	Barium	180-15368-1	1.8	1.8	mg/L		0.2			Highland	2012
APW Tank Bottoms	Barium	180-17242-1	1.8	1.8	mg/L	B	0.2			Fresno	2012

MATRIX	PARAMETER	LAB ID	RESULT	RANKED DATA	UNITS	QUALIFIER	REPORTING LIMIT	Uth VALUE	COUNT	FACILITY	YEAR
APW Tank Bottoms	Barium	C9H130286001	2	2	mg/L		2			Los Angeles	2009
APW Tank Bottoms	Barium	C9H130284001	2.1	2.1	mg/L		2			El Monte	2009
APW Tank Bottoms	Barium	180-26073-1	2.3	2.3	mg/L	B	2			Highland	2013
APW Tank Bottoms	Barium	180-80850-1	2.3	2.3	mg/L		2	31	48	Sacramento	2018
APW Tank Bottoms	Barium	180-38676-1	2.6	2.6	mg/L	J	20			Highland	2014
APW Tank Bottoms	Barium	C0C300517001	4.4	4.4	mg/L		2			El Monte	2010
APW Tank Bottoms	Barium	C0F220562001	4.5	4.5	mg/L		2			Los Angeles	2010
APW Tank Bottoms	Barium	C6C150186001	10	5	mg/L	U	10			Oakland	2006
APW Tank Bottoms	Barium	C6C310223001	10	5	mg/L	U	10			Highland	2006
APW Tank Bottoms	Barium	C6I150307001	10	5	mg/L	U	10			El Monte	2006
APW Tank Bottoms	Barium	C6L050260001	10	5	mg/L	U	10			Fresno	2006
APW Tank Bottoms	Barium	C8A110289001	10	5	mg/L	U	10			Sacramento	2008
APW Tank Bottoms	Barium	C8G220112001	10	5	mg/L	U	10			Highland	2008
APW Tank Bottoms	Barium	C8L030200001	10	5	mg/L	U	10			Fresno	2008
APW Tank Bottoms	Barium	C9D010186001	10	5	mg/L	U	10			El Monte	2009
APW Tank Bottoms	Barium	180-5303-1	7.6	7.6	mg/L		2000			Highland	2012
APW Tank Bottoms	Barium	180-4418-1	9.8	9.8	mg/L		2000			Highland	2012
APW Tank Bottoms	Barium	C8H150273001	20	10	mg/L	U	20			Los Angeles	2008
APW Tank Bottoms	Barium	C1D010430001	20	10	mg/L	U	20			El Monte	2011
APW Tank Bottoms	Barium	180-1932-1	11	11	mg/L		2000			Los Angeles	2011
APW Tank Bottoms	Barium	C0F220561001	24.4	24.4	mg/L		2			El Monte	2010
APW Tank Bottoms	Benzene	C6C310223001	0.05	0.025	mg/L	U	0.05			Highland	2006
APW Tank Bottoms	Benzene	C6I150307001	0.05	0.025	mg/L	U	0.05			El Monte	2006
APW Tank Bottoms	Benzene	C9G310286001	0.05	0.025	mg/L	U	0.05			El Monte	2009
APW Tank Bottoms	Benzene	180-4418-1	0.044	0.044	mg/L	J	0.2			Highland	2012
APW Tank Bottoms	Benzene	180-1932-1	0.045	0.045	mg/L	J	0.2			Los Angeles	2011
APW Tank Bottoms	Benzene	C6C150186001	0.2	0.1	mg/L	U	0.2			Oakland	2006
APW Tank Bottoms	Benzene	C6L050260001	0.2	0.1	mg/L	U	0.2			Fresno	2006
APW Tank Bottoms	Benzene	C8A110289001	0.2	0.1	mg/L	U	0.2			Sacramento	2008
APW Tank Bottoms	Benzene	C8E080389001	0.2	0.1	mg/L	U	0.2			El Monte	2008
APW Tank Bottoms	Benzene	C8E080390001	0.2	0.1	mg/L	U	0.2			El Monte	2008
APW Tank Bottoms	Benzene	C8G220112001	0.2	0.1	mg/L	U	0.2			Highland	2008
APW Tank Bottoms	Benzene	C8L030200001	0.2	0.1	mg/L	U	0.2			Fresno	2008
APW Tank Bottoms	Benzene	C9D010186001	0.2	0.1	mg/L	U	0.2			El Monte	2009
APW Tank Bottoms	Benzene	C0C300517001	0.2	0.1	mg/L	U	0.2			El Monte	2010
APW Tank Bottoms	Benzene	C9J160264001	0.2	0.1	mg/L	U	0.2			Highland	2010
APW Tank Bottoms	Benzene	C9K050460001	0.2	0.1	mg/L	U	0.2			Fresno	2010
APW Tank Bottoms	Benzene	C0J110402002	0.2	0.1	mg/L	U	0.2			Sacramento	2010

MATRIX	PARAMETER	LAB ID	RESULT	RANKED DATA	UNITS	QUALIFIER	REPORTING LIMIT	Uth VALUE	COUNT	FACILITY	YEAR
APW Tank Bottoms	Benzene	C0J150414001	0.2	0.1	mg/L	U	0.2			Highland	2010
APW Tank Bottoms	Benzene	C0K050586001	0.2	0.1	mg/L	U	0.2			Fresno	2010
APW Tank Bottoms	Benzene	180-15368-1	0.2	0.1	mg/L	U	0.2			Highland	2012
APW Tank Bottoms	Benzene	180-17242-1	0.2	0.1	mg/L	U	0.2			Fresno	2012
APW Tank Bottoms	Benzene	180-11547-1	0.2	0.1	mg/L	U	0.2			Los Angeles	2012
APW Tank Bottoms	Benzene	180-11254-1	0.2	0.1	mg/L	U	0.2			Santa Ana	2012
APW Tank Bottoms	Benzene	180-5303-1	0.2	0.1	mg/L	U H	0.2			Highland	2012
APW Tank Bottoms	Benzene	180-4700-1	0.2	0.1	mg/L	U	0.2			Fresno	2012
APW Tank Bottoms	Benzene	180-9155-1	0.2	0.1	mg/L	U	0.2			El Monte	2012
APW Tank Bottoms	Benzene	180-26073-1	0.2	0.1	mg/L	U	200			Highland	2013
APW Tank Bottoms	Benzene	180-26876-1	0.2	0.1	mg/L	U	0.2			Fresno	2013
APW Tank Bottoms	Benzene	180-30866-1	0.2	0.1	mg/L	U	0.2			Sacramento	2014
APW Tank Bottoms	Benzene	180-38043-1	0.2	0.1	mg/L	U	0.2			Fresno	2014
APW Tank Bottoms	Benzene	180-38676-1	0.2	0.1	mg/L	U	0.2	31	48	Highland	2014
APW Tank Bottoms	Benzene	180-50275-1	0.2	0.1	mg/L	U	0.2			Los Angeles	2015
APW Tank Bottoms	Benzene	180-58154-1	0.2	0.1	mg/L	U	0.2			Santa Ana	2016
APW Tank Bottoms	Benzene	180-70385-1	0.2	0.1	mg/L	U	0.2			Los Angeles	2017
APW Tank Bottoms	Benzene	180-67797-1	0.2	0.1	mg/L	U	0.2			Santa Ana	2017
APW Tank Bottoms	Benzene	180-60019-1	0.2	0.1	mg/L	U	0.2			Fresno	2017
APW Tank Bottoms	Benzene	180-61551-1	0.2	0.1	mg/L	U	0.2			Los Angeles	2017
APW Tank Bottoms	Benzene	180-81780-1	0.2	0.1	mg/L	U	0.2			Los Angeles	2018
APW Tank Bottoms	Benzene	180-80850-1	0.2	0.1	mg/L	U	0.2			Sacramento	2018
APW Tank Bottoms	Benzene	180-78622-1	0.2	0.1	mg/L	U	0.2			Santa Ana	2018
APW Tank Bottoms	Benzene	C8H150273001	0.25	0.125	mg/L	U	0.25			Los Angeles	2008
APW Tank Bottoms	Benzene	440-54550-1	0.4	0.2	mg/L	U	0.2			Los Angeles	2013
APW Tank Bottoms	Benzene	C0F220561001	0.5	0.25	mg/L	U	0.5			El Monte	2010
APW Tank Bottoms	Benzene	C1D010430001	0.5	0.25	mg/L	U	0.5			El Monte	2011
APW Tank Bottoms	Benzene	C9H130286001	1	0.5	mg/L	U	1			Los Angeles	2009
APW Tank Bottoms	Benzene	C9H130284001	1.2	0.6	mg/L	U	1.2			El Monte	2009
APW Tank Bottoms	Benzene	C0F220562001	0.76	0.76	mg/L		0.5			Los Angeles	2010
APW Tank Bottoms	Benzene	180-50336-1	100	50	mg/L	U	100			Fresno	2015
APW Tank Bottoms	Bulk Density	180-80850-1	1	1	g/cc		0.01			Sacramento	2018
APW Tank Bottoms	Bulk Density	180-81780-1	1.1	1.1	g/cc		0.01			Los Angeles	2018
APW Tank Bottoms	Cadmium	180-26073-1	0.0037	0.0037	mg/L	J	0.5			Highland	2013
APW Tank Bottoms	Cadmium	180-80850-1	0.022	0.022	mg/L	J	0.05			Sacramento	2018
APW Tank Bottoms	Cadmium	C8E080389001	0.05	0.025	mg/L	U	0.05			El Monte	2008
APW Tank Bottoms	Cadmium	C8E080390001	0.05	0.025	mg/L	U	0.05			El Monte	2008
APW Tank Bottoms	Cadmium	C9H130284001	0.05	0.025	mg/L	U	0.05			El Monte	2009

MATRIX	PARAMETER	LAB ID	RESULT	RANKED DATA	UNITS	QUALIFIER	REPORTING LIMIT	Uth VALUE	COUNT	FACILITY	YEAR
APW Tank Bottoms	Cadmium	C9H130286001	0.05	0.025	mg/L	U	0.05			Los Angeles	2009
APW Tank Bottoms	Cadmium	180-60019-1	0.031	0.031	mg/L	J	0.5			Fresno	2017
APW Tank Bottoms	Cadmium	180-11254-1	0.032	0.032	mg/L	J	0.05			Santa Ana	2012
APW Tank Bottoms	Cadmium	180-11547-1	0.043	0.043	mg/L	J	0.05			Los Angeles	2012
APW Tank Bottoms	Cadmium	180-67797-1	0.048	0.048	mg/L	J	0.05			Santa Ana	2017
APW Tank Bottoms	Cadmium	180-50336-1	0.052	0.052	mg/L	J	0.25			Fresno	2015
APW Tank Bottoms	Cadmium	180-58154-1	0.055	0.055	mg/L		0.05			Santa Ana	2016
APW Tank Bottoms	Cadmium	180-78622-1	0.073	0.073	mg/L		0.05			Santa Ana	2018
APW Tank Bottoms	Cadmium	180-38675-1	0.087	0.087	mg/L	J B	0.5			Highland	2014
APW Tank Bottoms	Cadmium	180-15368-1	0.11	0.11	mg/L		0.05			Highland	2012
APW Tank Bottoms	Cadmium	C0F220562001	0.14	0.14	mg/L		0.05			Los Angeles	2010
APW Tank Bottoms	Cadmium	440-54550-1	0.14	0.14	mg/L		0.05			Los Angeles	2013
APW Tank Bottoms	Cadmium	C6C310223001	0.15	0.15	mg/L		0.1			Highland	2006
APW Tank Bottoms	Cadmium	C6I150307001	0.16	0.16	mg/L		0.1			El Monte	2006
APW Tank Bottoms	Cadmium	C0J150414001	0.16	0.16	mg/L		0.05			Highland	2010
APW Tank Bottoms	Cadmium	C9G310286001	0.17	0.17	mg/L		0.05			El Monte	2009
APW Tank Bottoms	Cadmium	C8A110289001	0.19	0.19	mg/L		0.1			Sacramento	2008
APW Tank Bottoms	Cadmium	C8G220112001	0.19	0.19	mg/L		0.1			Highland	2008
APW Tank Bottoms	Cadmium	C9K050460001	0.2	0.2	mg/L		0.05			Fresno	2010
APW Tank Bottoms	Cadmium	C9J160264001	0.21	0.21	mg/L		0.05			Highland	2010
APW Tank Bottoms	Cadmium	C9D010186001	0.22	0.22	mg/L		0.1			El Monte	2009
APW Tank Bottoms	Cadmium	C0C300517001	0.22	0.22	mg/L		0.05			El Monte	2010
APW Tank Bottoms	Cadmium	180-61551-1	0.24	0.24	mg/L	J B	0.5			Los Angeles	2017
APW Tank Bottoms	Cadmium	C8H150273001	0.5	0.25	mg/L	U	0.5			Los Angeles	2008
APW Tank Bottoms	Cadmium	C1D010430001	0.5	0.25	mg/L	U	0.5			El Monte	2011
APW Tank Bottoms	Cadmium	C8L030200001	0.26	0.26	mg/L		0.1	31	48	Fresno	2008
APW Tank Bottoms	Cadmium	C0K050586001	0.26	0.26	mg/L		0.05			Fresno	2010
APW Tank Bottoms	Cadmium	180-5303-1	0.28	0.28	mg/L		0.05			Highland	2012
APW Tank Bottoms	Cadmium	180-70385-1	0.29	0.29	mg/L	J	0.5			Los Angeles	2017
APW Tank Bottoms	Cadmium	180-81780-1	0.29	0.29	mg/L	J	0.5			Los Angeles	2018
APW Tank Bottoms	Cadmium	C6C150186001	0.31	0.31	mg/L		0.1			Oakland	2006
APW Tank Bottoms	Cadmium	180-4418-1	0.32	0.32	mg/L		0.05			Highland	2012
APW Tank Bottoms	Cadmium	180-38043-1	0.33	0.33	mg/L	J B	0.5			Fresno	2014
APW Tank Bottoms	Cadmium	C6L050260001	0.34	0.34	mg/L		0.1			Fresno	2006
APW Tank Bottoms	Cadmium	180-26876-1	0.37	0.37	mg/L	J	0.5			Fresno	2013
APW Tank Bottoms	Cadmium	180-9155-1	0.4	0.4	mg/L		0.25			El Monte	2012
APW Tank Bottoms	Cadmium	C0J110402002	0.42	0.42	mg/L		0.05			Sacramento	2010
APW Tank Bottoms	Cadmium	180-17242-1	0.43	0.43	mg/L		0.05			Fresno	2012

MATRIX	PARAMETER	LAB ID	RESULT	RANKED DATA	UNITS	QUALIFIER	REPORTING LIMIT	Uth VALUE	COUNT	FACILITY	YEAR
APW Tank Bottoms	Cadmium	180-50275-1	0.48	0.48	mg/L	J	0.5			Los Angeles	2015
APW Tank Bottoms	Cadmium	180-1932-1	0.58	0.58	mg/L		0.05			Los Angeles	2011
APW Tank Bottoms	Cadmium	180-30866-1	1.3	1.3	mg/L		0.5			Sacramento	2014
APW Tank Bottoms	Cadmium	C0F220561001	1.8	1.8	mg/L		0.05			El Monte	2010
APW Tank Bottoms	Cadmium	180-4700-1	13	13	mg/L		0.25			Fresno	2012
APW Tank Bottoms	Carbon Tetrachloride	C6C310223001	0.05	0.025	mg/L	U	0.05			Highland	2006
APW Tank Bottoms	Carbon Tetrachloride	C6I150307001	0.05	0.025	mg/L	U	0.05			El Monte	2006
APW Tank Bottoms	Carbon Tetrachloride	C9G310286001	0.05	0.025	mg/L	U	0.05			El Monte	2009
APW Tank Bottoms	Carbon Tetrachloride	C6C150186001	0.2	0.1	mg/L	U	0.2			Oakland	2006
APW Tank Bottoms	Carbon Tetrachloride	C6L050260001	0.2	0.1	mg/L	U	0.2			Fresno	2006
APW Tank Bottoms	Carbon Tetrachloride	C8A110289001	0.2	0.1	mg/L	U	0.2			Sacramento	2008
APW Tank Bottoms	Carbon Tetrachloride	C8E080389001	0.2	0.1	mg/L	U	0.2			El Monte	2008
APW Tank Bottoms	Carbon Tetrachloride	C8E080390001	0.2	0.1	mg/L	U	0.2			El Monte	2008
APW Tank Bottoms	Carbon Tetrachloride	C8G220112001	0.2	0.1	mg/L	U	0.2			Highland	2008
APW Tank Bottoms	Carbon Tetrachloride	C8L030200001	0.2	0.1	mg/L	U	0.2			Fresno	2008
APW Tank Bottoms	Carbon Tetrachloride	C9D010186001	0.2	0.1	mg/L	U	0.2			El Monte	2009
APW Tank Bottoms	Carbon Tetrachloride	C0C300517001	0.2	0.1	mg/L	U	0.2			El Monte	2010
APW Tank Bottoms	Carbon Tetrachloride	C9J160264001	0.2	0.1	mg/L	U	0.2			Highland	2010
APW Tank Bottoms	Carbon Tetrachloride	C9K050460001	0.2	0.1	mg/L	U	0.2			Fresno	2010
APW Tank Bottoms	Carbon Tetrachloride	C0J110402002	0.2	0.1	mg/L	U	0.2			Sacramento	2010
APW Tank Bottoms	Carbon Tetrachloride	C0J150414001	0.2	0.1	mg/L	U	0.2			Highland	2010
APW Tank Bottoms	Carbon Tetrachloride	C0K050586001	0.2	0.1	mg/L	U	0.2			Fresno	2010
APW Tank Bottoms	Carbon Tetrachloride	180-1932-1	0.2	0.1	mg/L	U	0.2			Los Angeles	2011
APW Tank Bottoms	Carbon Tetrachloride	180-15368-1	0.2	0.1	mg/L	U	0.2			Highland	2012
APW Tank Bottoms	Carbon Tetrachloride	180-17242-1	0.2	0.1	mg/L	U	0.2			Fresno	2012
APW Tank Bottoms	Carbon Tetrachloride	180-11547-1	0.2	0.1	mg/L	U	0.2			Los Angeles	2012
APW Tank Bottoms	Carbon Tetrachloride	180-11254-1	0.2	0.1	mg/L	U	0.2			Santa Ana	2012
APW Tank Bottoms	Carbon Tetrachloride	180-4418-1	0.2	0.1	mg/L	U	0.2			Highland	2012
APW Tank Bottoms	Carbon Tetrachloride	180-5303-1	0.2	0.1	mg/L	U H	0.2			Highland	2012
APW Tank Bottoms	Carbon Tetrachloride	180-4700-1	0.2	0.1	mg/L	U	0.2			Fresno	2012
APW Tank Bottoms	Carbon Tetrachloride	180-9155-1	0.2	0.1	mg/L	U	0.2			El Monte	2012
APW Tank Bottoms	Carbon Tetrachloride	180-26073-1	0.2	0.1	mg/L	U	200			Highland	2013
APW Tank Bottoms	Carbon Tetrachloride	180-26876-1	0.2	0.1	mg/L	U	0.2			Fresno	2013
APW Tank Bottoms	Carbon Tetrachloride	180-30866-1	0.2	0.1	mg/L	U	0.2			Sacramento	2014
APW Tank Bottoms	Carbon Tetrachloride	180-38043-1	0.2	0.1	mg/L	U	0.2			Fresno	2014
APW Tank Bottoms	Carbon Tetrachloride	180-38676-1	0.2	0.1	mg/L	U	0.2	31	48	Highland	2014
APW Tank Bottoms	Carbon Tetrachloride	180-50275-1	0.2	0.1	mg/L	U	0.2			Los Angeles	2015
APW Tank Bottoms	Carbon Tetrachloride	180-58154-1	0.2	0.1	mg/L	U	0.2			Santa Ana	2016

MATRIX	PARAMETER	LAB ID	RESULT	RANKED DATA	UNITS	QUALIFIER	REPORTING LIMIT	Uth VALUE	COUNT	FACILITY	YEAR
APW Tank Bottoms	Carbon tetrachloride	180-70385-1	0.2	0.1	mg/L	U	0.2			Los Angeles	2017
APW Tank Bottoms	Carbon tetrachloride	180-67797-1	0.2	0.1	mg/L	U	0.2			Santa Ana	2017
APW Tank Bottoms	Carbon tetrachloride	180-60019-1	0.2	0.1	mg/L	U	0.2			Fresno	2017
APW Tank Bottoms	Carbon tetrachloride	180-61551-1	0.2	0.1	mg/L	U	0.2			Los Angeles	2017
APW Tank Bottoms	Carbon tetrachloride	180-81780-1	0.2	0.1	mg/L	U	0.2			Los Angeles	2018
APW Tank Bottoms	Carbon tetrachloride	180-80850-1	0.2	0.1	mg/L	U	0.2			Sacramento	2018
APW Tank Bottoms	Carbon tetrachloride	180-78622-1	0.2	0.1	mg/L	U	0.2			Santa Ana	2018
APW Tank Bottoms	Carbon Tetrachloride	C8H150273001	0.25	0.125	mg/L	U	0.25			Los Angeles	2008
APW Tank Bottoms	Carbon Tetrachloride	C0F220561001	0.5	0.25	mg/L	U	0.5			El Monte	2010
APW Tank Bottoms	Carbon Tetrachloride	C0F220562001	0.5	0.25	mg/L	U	0.5			Los Angeles	2010
APW Tank Bottoms	Carbon Tetrachloride	C1D010430001	0.5	0.25	mg/L	U	0.5			El Monte	2011
APW Tank Bottoms	Carbon Tetrachloride	C9H130286001	1	0.5	mg/L	U	1			Los Angeles	2009
APW Tank Bottoms	Carbon Tetrachloride	440-54550-1	1	0.5	mg/L	U	0.2			Los Angeles	2013
APW Tank Bottoms	Carbon Tetrachloride	C9H130284001	1.2	0.6	mg/L	U	1.2			El Monte	2009
APW Tank Bottoms	Carbon Tetrachloride	180-50336-1	100	50	mg/L	U	100			Fresno	2015
APW Tank Bottoms	Chlorobenzene	C6C310223001	0.05	0.025	mg/L	U	0.05			Highland	2006
APW Tank Bottoms	Chlorobenzene	C6I150307001	0.05	0.025	mg/L	U	0.05			El Monte	2006
APW Tank Bottoms	Chlorobenzene	C9G310286001	0.05	0.025	mg/L	U	0.05			El Monte	2009
APW Tank Bottoms	Chlorobenzene	C6C150186001	0.2	0.1	mg/L	U	0.2			Oakland	2006
APW Tank Bottoms	Chlorobenzene	C6L050260001	0.2	0.1	mg/L	U	0.2			Fresno	2006
APW Tank Bottoms	Chlorobenzene	C8A110289001	0.2	0.1	mg/L	U	0.2			Sacramento	2008
APW Tank Bottoms	Chlorobenzene	C8E080389001	0.2	0.1	mg/L	U	0.2			El Monte	2008
APW Tank Bottoms	Chlorobenzene	C8E080390001	0.2	0.1	mg/L	U	0.2			El Monte	2008
APW Tank Bottoms	Chlorobenzene	C8G220112001	0.2	0.1	mg/L	U	0.2			Highland	2008
APW Tank Bottoms	Chlorobenzene	C8L030200001	0.2	0.1	mg/L	U	0.2			Fresno	2008
APW Tank Bottoms	Chlorobenzene	C9D010186001	0.2	0.1	mg/L	U	0.2			El Monte	2009
APW Tank Bottoms	Chlorobenzene	C0C300517001	0.2	0.1	mg/L	U	0.2			El Monte	2010
APW Tank Bottoms	Chlorobenzene	C9J160264001	0.2	0.1	mg/L	U	0.2			Highland	2010
APW Tank Bottoms	Chlorobenzene	C9K050460001	0.2	0.1	mg/L	U	0.2			Fresno	2010
APW Tank Bottoms	Chlorobenzene	C0J110402002	0.2	0.1	mg/L	U	0.2			Sacramento	2010
APW Tank Bottoms	Chlorobenzene	C0J150414001	0.2	0.1	mg/L	U	0.2			Highland	2010
APW Tank Bottoms	Chlorobenzene	C0K050586001	0.2	0.1	mg/L	U	0.2			Fresno	2010
APW Tank Bottoms	Chlorobenzene	180-1932-1	0.2	0.1	mg/L	U	0.2			Los Angeles	2011
APW Tank Bottoms	Chlorobenzene	180-15368-1	0.2	0.1	mg/L	U	0.2			Highland	2012
APW Tank Bottoms	Chlorobenzene	180-17242-1	0.2	0.1	mg/L	U	0.2			Fresno	2012
APW Tank Bottoms	Chlorobenzene	180-11547-1	0.2	0.1	mg/L	U	0.2			Los Angeles	2012
APW Tank Bottoms	Chlorobenzene	180-11254-1	0.2	0.1	mg/L	U	0.2			Santa Ana	2012
APW Tank Bottoms	Chlorobenzene	180-4418-1	0.2	0.1	mg/L	U	0.2			Highland	2012

MATRIX	PARAMETER	LAB ID	RESULT	RANKED DATA	UNITS	QUALIFIER	REPORTING LIMIT	Uth VALUE	COUNT	FACILITY	YEAR
APW Tank Bottoms	Chlorobenzene	180-5303-1	0.2	0.1	mg/L	U H	0.2			Highland	2012
APW Tank Bottoms	Chlorobenzene	180-4700-1	0.2	0.1	mg/L	U	0.2			Fresno	2012
APW Tank Bottoms	Chlorobenzene	180-9155-1	0.2	0.1	mg/L	U	0.2			El Monte	2012
APW Tank Bottoms	**Chlorobenzene**	**180-26073-1**	**0.2**	**0.1**	**mg/L**	**U**	**200**			**Highland**	**2013**
APW Tank Bottoms	Chlorobenzene	180-26876-1	0.2	0.1	mg/L	U	0.2			Fresno	2013
APW Tank Bottoms	Chlorobenzene	180-30866-1	0.2	0.1	mg/L	U	0.2			Sacramento	2014
APW Tank Bottoms	Chlorobenzene	180-38043-1	0.2	0.1	mg/L	U	0.2			Fresno	2014
APW Tank Bottoms	Chlorobenzene	180-38676-1	0.2	0.1	mg/L	U	0.2	31	48	Highland	2014
APW Tank Bottoms	Chlorobenzene	180-50275-1	0.2	0.1	mg/L	U	0.2			Los Angeles	2015
APW Tank Bottoms	Chlorobenzene	180-58154-1	0.2	0.1	mg/L	U	0.2			Santa Ana	2016
APW Tank Bottoms	Chlorobenzene	180-70385-1	0.2	0.1	mg/L	U	0.2			Los Angeles	2017
APW Tank Bottoms	Chlorobenzene	180-67797-1	0.2	0.1	mg/L	U	0.2			Santa Ana	2017
APW Tank Bottoms	Chlorobenzene	180-60019-1	0.2	0.1	mg/L	U	0.2			Fresno	2017
APW Tank Bottoms	Chlorobenzene	180-61551-1	0.2	0.1	mg/L	U	0.2			Los Angeles	2017
APW Tank Bottoms	Chlorobenzene	180-81780-1	0.2	0.1	mg/L	U	0.2			Los Angeles	2018
APW Tank Bottoms	Chlorobenzene	180-80850-1	0.2	0.1	mg/L	U	0.2			Sacramento	2018
APW Tank Bottoms	Chlorobenzene	180-78622-1	0.2	0.1	mg/L	U	0.2			Santa Ana	2018
APW Tank Bottoms	Chlorobenzene	C8H150273001	0.25	0.125	mg/L	U	0.25			Los Angeles	2008
APW Tank Bottoms	Chlorobenzene	440-54550-1	0.4	0.2	mg/L	U	0.2			Los Angeles	2013
APW Tank Bottoms	Chlorobenzene	C0F220562001	0.5	0.25	mg/L	U	0.5			Los Angeles	2010
APW Tank Bottoms	Chlorobenzene	C1D010430001	0.5	0.25	mg/L	U	0.5			El Monte	2011
APW Tank Bottoms	Chlorobenzene	C9H130286001	1	0.5	mg/L	U	1			Los Angeles	2009
APW Tank Bottoms	Chlorobenzene	C9H130284001	1.2	0.6	mg/L	U	1.2			El Monte	2009
APW Tank Bottoms	Chlorobenzene	C0F220561001	1.2	1.2	mg/L		0.5			El Monte	2010
APW Tank Bottoms	Chlorobenzene	180-50336-1	100	50	mg/L	U	100			Fresno	2015
APW Tank Bottoms	Chloroform	C6C310223001	0.05	0.025	mg/L	U	0.05			Highland	2006
APW Tank Bottoms	Chloroform	C6I150307001	0.05	0.025	mg/L	U	0.05			El Monte	2006
APW Tank Bottoms	Chloroform	C9G310286001	0.05	0.025	mg/L	U	0.05			El Monte	2009
APW Tank Bottoms	Chloroform	180-5303-1	0.077	0.077	mg/L	J H	0.2			Highland	2012
APW Tank Bottoms	Chloroform	C6C150186001	0.2	0.1	mg/L	U	0.2			Oakland	2006
APW Tank Bottoms	Chloroform	C6L050260001	0.2	0.1	mg/L	U	0.2			Fresno	2006
APW Tank Bottoms	Chloroform	C8A110289001	0.2	0.1	mg/L	U	0.2			Sacramento	2008
APW Tank Bottoms	Chloroform	C8E080389001	0.2	0.1	mg/L	U	0.2			El Monte	2008
APW Tank Bottoms	Chloroform	C8E080390001	0.2	0.1	mg/L	U	0.2			El Monte	2008
APW Tank Bottoms	Chloroform	C8G220112001	0.2	0.1	mg/L	U	0.2			Highland	2008
APW Tank Bottoms	Chloroform	C8L030200001	0.2	0.1	mg/L	U	0.2			Fresno	2008
APW Tank Bottoms	Chloroform	C9D010186001	0.2	0.1	mg/L	U	0.2			El Monte	2009
APW Tank Bottoms	Chloroform	C0C300517001	0.2	0.1	mg/L	U	0.2			El Monte	2010

MATRIX	PARAMETER	LAB ID	RESULT	RANKED DATA	UNITS	QUALIFIER	REPORTING LIMIT	Uth VALUE	COUNT	FACILITY	YEAR
APW Tank Bottoms	Chloroform	C9J160264001	0.2	0.1	mg/L	U	0.2			Highland	2010
APW Tank Bottoms	Chloroform	C9K050460001	0.2	0.1	mg/L	U	0.2			Fresno	2010
APW Tank Bottoms	Chloroform	C0J110402002	0.2	0.1	mg/L	U	0.2			Sacramento	2010
APW Tank Bottoms	Chloroform	C0J150414001	0.2	0.1	mg/L	U	0.2			Highland	2010
APW Tank Bottoms	Chloroform	C0K050586001	0.2	0.1	mg/L	U	0.2			Fresno	2010
APW Tank Bottoms	Chloroform	180-1932-1	0.2	0.1	mg/L	U	0.2			Los Angeles	2011
APW Tank Bottoms	Chloroform	180-15368-1	0.2	0.1	mg/L	U	0.2			Highland	2012
APW Tank Bottoms	Chloroform	180-17242-1	0.2	0.1	mg/L	U	0.2			Fresno	2012
APW Tank Bottoms	Chloroform	180-11547-1	0.2	0.1	mg/L	U	0.2			Los Angeles	2012
APW Tank Bottoms	Chloroform	180-11254-1	0.2	0.1	mg/L	U	0.2			Santa Ana	2012
APW Tank Bottoms	Chloroform	180-4418-1	0.2	0.1	mg/L	U	0.2			Highland	2012
APW Tank Bottoms	Chloroform	180-4700-1	0.2	0.1	mg/L	U	0.2			Fresno	2012
APW Tank Bottoms	Chloroform	180-9155-1	0.2	0.1	mg/L	U	0.2			El Monte	2012
APW Tank Bottoms	Chloroform	180-26073-1	0.2	0.1	mg/L	U	200			Highland	2013
APW Tank Bottoms	Chloroform	180-26876-1	0.2	0.1	mg/L	U	0.2			Fresno	2013
APW Tank Bottoms	Chloroform	180-30866-1	0.2	0.1	mg/L	U	0.2			Sacramento	2014
APW Tank Bottoms	Chloroform	180-38043-1	0.2	0.1	mg/L	U	0.2			Fresno	2014
APW Tank Bottoms	Chloroform	180-38676-1	0.2	0.1	mg/L	U	0.2	31	48	Highland	2014
APW Tank Bottoms	Chloroform	180-50275-1	0.2	0.1	mg/L	U	0.2			Los Angeles	2015
APW Tank Bottoms	Chloroform	180-58154-1	0.2	0.1	mg/L	U	0.2			Santa Ana	2016
APW Tank Bottoms	Chloroform	180-70385-1	0.2	0.1	mg/L	U	0.2			Los Angeles	2017
APW Tank Bottoms	Chloroform	180-67797-1	0.2	0.1	mg/L	U	0.2			Santa Ana	2017
APW Tank Bottoms	Chloroform	180-60019-1	0.2	0.1	mg/L	U	0.2			Fresno	2017
APW Tank Bottoms	Chloroform	180-61551-1	0.2	0.1	mg/L	U	0.2			Los Angeles	2017
APW Tank Bottoms	Chloroform	180-81780-1	0.2	0.1	mg/L	U	0.2			Los Angeles	2018
APW Tank Bottoms	Chloroform	180-80850-1	0.2	0.1	mg/L	U	0.2			Sacramento	2018
APW Tank Bottoms	Chloroform	180-78622-1	0.2	0.1	mg/L	U	0.2			Santa Ana	2018
APW Tank Bottoms	Chloroform	440-54550-1	0.4	0.2	mg/L	U	0.2			Los Angeles	2013
APW Tank Bottoms	Chloroform	C0F220561001	0.5	0.25	mg/L	U	0.5			El Monte	2010
APW Tank Bottoms	Chloroform	C0F220562001	0.5	0.25	mg/L	U	0.5			Los Angeles	2010
APW Tank Bottoms	Chloroform	C8H150273001	1	0.5	mg/L	U	1			Los Angeles	2008
APW Tank Bottoms	Chloroform	C9H130286001	1	0.5	mg/L	U	1			Los Angeles	2009
APW Tank Bottoms	Chloroform	C9H130284001	1.2	0.6	mg/L	U	1.2			El Monte	2009
APW Tank Bottoms	Chloroform	C1D010430001	2	1	mg/L	U	2			El Monte	2011
APW Tank Bottoms	Chloroform	180-50336-1	100	50	mg/L	U	100			Fresno	2015
APW Tank Bottoms	Chromium	180-60019-1	0.0072	0.0072	mg/L	J	0.5			Fresno	2017
APW Tank Bottoms	Chromium	180-15368-1	0.012	0.012	mg/L	J	0.05			Highland	2012
APW Tank Bottoms	Chromium	180-70385-1	0.013	0.013	mg/L	J	0.5			Los Angeles	2017

MATRIX	PARAMETER	LAB ID	RESULT	RANKED DATA	UNITS	QUALIFIER	REPORTING LIMIT	Uth VALUE	COUNT	FACILITY	YEAR
APW Tank Bottoms	Chromium	180-9155-1	0.015	0.015	mg/L	J	0.25			El Monte	2012
APW Tank Bottoms	Chromium	180-17242-1	0.017	0.017	mg/L	J B	0.05			Fresno	2012
APW Tank Bottoms	Chromium	180-30866-1	0.019	0.019	mg/L	J	0.5			Sacramento	2014
APW Tank Bottoms	Chromium	180-61551-1	0.02	0.02	mg/L	J	0.5			Los Angeles	2017
APW Tank Bottoms	Chromium	180-81780-1	0.021	0.021	mg/L	J	0.5			Los Angeles	2018
APW Tank Bottoms	Chromium	180-50275-1	0.024	0.024	mg/L	J	0.5			Los Angeles	2015
APW Tank Bottoms	Chromium	C8E080389001	0.05	0.025	mg/L	U	0.05			El Monte	2008
APW Tank Bottoms	Chromium	C8E080390001	0.05	0.025	mg/L	U	0.05			El Monte	2008
APW Tank Bottoms	Chromium	C9G310286001	0.05	0.025	mg/L	U	0.05			El Monte	2009
APW Tank Bottoms	Chromium	C9J160264001	0.05	0.025	mg/L	U	0.05			Highland	2010
APW Tank Bottoms	Chromium	C9K050460001	0.05	0.025	mg/L	U	0.05			Fresno	2010
APW Tank Bottoms	Chromium	C0J110402002	0.05	0.025	mg/L	U	0.05			Sacramento	2010
APW Tank Bottoms	Chromium	C0J150414001	0.05	0.025	mg/L	U	0.05			Highland	2010
APW Tank Bottoms	Chromium	C0K050586001	0.05	0.025	mg/L	U	0.05			Fresno	2010
APW Tank Bottoms	Chromium	180-67797-1	0.029	0.029	mg/L	J	0.05			Santa Ana	2017
APW Tank Bottoms	Chromium	180-58154-1	0.037	0.037	mg/L	J	0.05			Santa Ana	2016
APW Tank Bottoms	Chromium	440-54550-1	0.1	0.05	mg/L	U	0.05			Los Angeles	2013
APW Tank Bottoms	Chromium	180-26876-1	0.056	0.056	mg/L	J	0.5			Fresno	2013
APW Tank Bottoms	Chromium	180-78622-1	0.058	0.058	mg/L		0.05			Santa Ana	2018
APW Tank Bottoms	Chromium	180-11547-1	0.063	0.063	mg/L		0.05			Los Angeles	2012
APW Tank Bottoms	Chromium	180-11254-1	0.076	0.076	mg/L		0.05			Santa Ana	2012
APW Tank Bottoms	Chromium	180-80850-1	0.079	0.079	mg/L		0.05			Sacramento	2018
APW Tank Bottoms	Chromium	180-26073-1	0.1	0.1	mg/L	J	0.5			Highland	2013
APW Tank Bottoms	Chromium	C9H130286001	0.12	0.12	mg/L		0.05			Los Angeles	2009
APW Tank Bottoms	Chromium	C0F220562001	0.16	0.16	mg/L		0.05			Los Angeles	2010
APW Tank Bottoms	Chromium	C9H130284001	0.19	0.19	mg/L		0.05			El Monte	2009
APW Tank Bottoms	Chromium	C6C150186001	0.5	0.25	mg/L	U	0.5			Oakland	2006
APW Tank Bottoms	Chromium	C6C310223001	0.5	0.25	mg/L	U	0.5	31	48	Highland	2006
APW Tank Bottoms	Chromium	C6I150307001	0.5	0.25	mg/L	U	0.5			El Monte	2006
APW Tank Bottoms	Chromium	C6L050260001	0.5	0.25	mg/L	U	0.5			Fresno	2006
APW Tank Bottoms	Chromium	C8A110289001	0.5	0.25	mg/L	U	0.5			Sacramento	2008
APW Tank Bottoms	Chromium	C8G220112001	0.5	0.25	mg/L	U	0.5			Highland	2008
APW Tank Bottoms	Chromium	C8H150273001	0.5	0.25	mg/L	U	0.5			Los Angeles	2008
APW Tank Bottoms	Chromium	C8L030200001	0.5	0.25	mg/L	U	0.5			Fresno	2008
APW Tank Bottoms	Chromium	C9D010186001	0.5	0.25	mg/L	U	0.5			El Monte	2009
APW Tank Bottoms	Chromium	C1D010430001	0.5	0.25	mg/L	U	0.5			El Monte	2011
APW Tank Bottoms	Chromium	180-38043-1	0.5	0.25	mg/L	U	0.5			Fresno	2014
APW Tank Bottoms	Chromium	C0C300517001	0.32	0.32	mg/L		0.05			El Monte	2010

MATRIX	PARAMETER	LAB ID	RESULT	RANKED DATA	UNITS	QUALIFIER	REPORTING LIMIT	Uth VALUE	COUNT	FACILITY	YEAR
APW Tank Bottoms	Chromium	180-38676-1	0.42	0.42	mg/L	J	0.5			Highland	2014
APW Tank Bottoms	Chromium	180-4418-1	0.92	0.92	mg/L		0.05			Highland	2012
APW Tank Bottoms	Chromium	180-5303-1	1.1	1.1	mg/L		0.05			Highland	2012
APW Tank Bottoms	Chromium	180-1932-1	1.7	1.7	mg/L		0.05			Los Angeles	2011
APW Tank Bottoms	Chromium	C0F220561001	3.5	3.5	mg/L		0.05			El Monte	2010
APW Tank Bottoms	Chromium	180-50336-1	7.7	7.7	mg/L		0.25			Fresno	2015
APW Tank Bottoms	Chromium	180-4700-1	32	32	mg/L		0.25			Fresno	2012
APW Tank Bottoms	Flashpoint	C8E080389001	>200	>200	Degrees F					El Monte	2008
APW Tank Bottoms	Flashpoint	C8E080390001	>200	>200	Degrees F					El Monte	2008
APW Tank Bottoms	Flashpoint	C9H130284001	>200	>200	Degrees F			30	47	El Monte	2009
APW Tank Bottoms	Flashpoint	C9H130286001	>200	>200	Degrees F					Los Angeles	2009
APW Tank Bottoms	Flashpoint	C0C300517001	>200	>200	Degrees F					El Monte	2010
APW Tank Bottoms	Flashpoint	C0F220561001	>200	>200	Degrees F					El Monte	2010
APW Tank Bottoms	Flashpoint	C0F220562001	>200	>200	Degrees F					Los Angeles	2010
APW Tank Bottoms	Flashpoint	C9K050460001	>200	>200	Degrees F					Fresno	2010
APW Tank Bottoms	Flashpoint	C1D010430001	>200	>200	Degrees F					El Monte	2011
APW Tank Bottoms	Flashpoint	180-1932-1	>200	>200	Degrees F					Los Angeles	2011
APW Tank Bottoms	Flashpoint	180-11254-1	>200	>200	Degrees F					Santa Ana	2012
APW Tank Bottoms	Flashpoint	180-5303-1	>200	>200	Degrees F					Highland	2012
APW Tank Bottoms	Flashpoint	180-4700-1	>200	>200	Degrees F					Fresno	2012
APW Tank Bottoms	Flashpoint	440-54550-1	>200	>200	Degrees F					Los Angeles	2013
APW Tank Bottoms	Flashpoint	180-38676-1	>200	>200	Degrees F		1			Highland	2014
APW Tank Bottoms	Flashpoint	180-50336-1	>200	>200	Degrees F		1			Fresno	2015
APW Tank Bottoms	Flashpoint	180-58154-1	>200	>200	Degrees F		1			Santa Ana	2016
APW Tank Bottoms	Flashpoint	180-67797-1	>200	>200	Degrees F		1			Santa Ana	2017
APW Tank Bottoms	Flashpoint	180-80850-1	>200	>200	Degrees F		1			Sacramento	2018
APW Tank Bottoms	Flashpoint	180-78622-1	>200	>200	Degrees F		1			Santa Ana	2018
APW Tank Bottoms	Flashpoint	180-11547-1	>180	>180	Degrees F					Los Angeles	2012
APW Tank Bottoms	Flashpoint	180-15368-1	>140	>140	Degrees F					Highland	2012
APW Tank Bottoms	Flashpoint	180-17242-1	>140	>140	Degrees F					Fresno	2012
APW Tank Bottoms	Flashpoint	180-26073-1	>140	>140	Degrees F					Highland	2013
APW Tank Bottoms	Flashpoint	180-26876-1	>140	>140	Degrees F					Fresno	2013
APW Tank Bottoms	Flashpoint	180-30866-1	>140	>140	Degrees F					Sacramento	2014
APW Tank Bottoms	Flashpoint	180-38043-1	>140	>140	Degrees F					Fresno	2014
APW Tank Bottoms	Flashpoint	180-50275-1	>140	>140	Degrees F					Los Angeles	2015
APW Tank Bottoms	Flashpoint	180-70385-1	>140	>140	Degrees F					Los Angeles	2017
APW Tank Bottoms	Flashpoint	180-60019-1	>140	>140	Degrees F					Fresno	2017
APW Tank Bottoms	Flashpoint	180-61551-1	>140	>140	Degrees F					Los Angeles	2017

MATRIX	PARAMETER	LAB ID	RESULT	RANKED DATA	UNITS	QUALIFIER	REPORTING LIMIT	Uth VALUE	COUNT	FACILITY	YEAR
APW Tank Bottoms	Flashpoint	C8H150273001	177	177	Degrees F					Los Angeles	2008
APW Tank Bottoms	Flashpoint	180-4418-1	159	159	Degrees F					Highland	2012
APW Tank Bottoms	Flashpoint	C0J110402001	146	146	Degrees F					Sacramento	2010
APW Tank Bottoms	Flashpoint	C6C150186001	141	141	Degrees F					Oakland	2006
APW Tank Bottoms	Flashpoint	C6C310223001	141	141	Degrees F					Highland	2006
APW Tank Bottoms	Flashpoint	C6I150307001	141	141	Degrees F					El Monte	2006
APW Tank Bottoms	Flashpoint	C6L050260001	141	141	Degrees F					Fresno	2006
APW Tank Bottoms	Flashpoint	C8A110289001	141	141	Degrees F					Sacramento	2008
APW Tank Bottoms	Flashpoint	C8G220112001	141	141	Degrees F					Highland	2008
APW Tank Bottoms	Flashpoint	C8L030200001	141	141	Degrees F					Fresno	2008
APW Tank Bottoms	Flashpoint	C9D010186001	141	141	Degrees F					El Monte	2009
APW Tank Bottoms	Flashpoint	C9G310286001	141	141	Degrees F					El Monte	2009
APW Tank Bottoms	Flashpoint	C0J150414001	141	141	Degrees F					Highland	2010
APW Tank Bottoms	Flashpoint	C0K050586001	141	141	Degrees F					Fresno	2010
APW Tank Bottoms	Flashpoint	180-9155-1	141	141	Degrees F					El Monte	2012
APW Tank Bottoms	Flashpoint	C9J160264002	134	134	Degrees F					Highland	2010
APW Tank Bottoms	Hexachlorobenzene	C9D010186001	0.05	0.025	mg/L	U	0.05			El Monte	2009
APW Tank Bottoms	Hexachlorobenzene	180-17242-1	0.05	0.025	mg/L	U	0.05			Fresno	2012
APW Tank Bottoms	Hexachlorobenzene	180-38043-1	0.05	0.025	mg/L	U	0.05			Fresno	2014
APW Tank Bottoms	Hexachlorobenzene	180-38676-1	0.05	0.025	mg/L	U	0.05			Highland	2014
APW Tank Bottoms	Hexachlorobenzene	180-50275-1	0.05	0.025	mg/L	U	0.05			Los Angeles	2015
APW Tank Bottoms	Hexachlorobenzene	180-58154-1	0.05	0.025	mg/L	U	0.05			Santa Ana	2016
APW Tank Bottoms	Hexachlorobenzene	180-70385-1	0.05	0.025	mg/L	U	0.05			Los Angeles	2017
APW Tank Bottoms	Hexachlorobenzene	180-67797-1	0.05	0.025	mg/L	U	0.05			Santa Ana	2017
APW Tank Bottoms	Hexachlorobenzene	180-60019-1	0.05	0.025	mg/L	U	0.05			Fresno	2017
APW Tank Bottoms	Hexachlorobenzene	180-61551-1	0.05	0.025	mg/L	U	0.05			Los Angeles	2017
APW Tank Bottoms	Hexachlorobenzene	180-81780-1	0.05	0.025	mg/L	U	0.05			Los Angeles	2018
APW Tank Bottoms	Hexachlorobenzene	180-80850-1	0.05	0.025	mg/L	U	0.05			Sacramento	2018
APW Tank Bottoms	Hexachlorobenzene	180-78622-1	0.05	0.025	mg/L	U	0.05			Santa Ana	2018
APW Tank Bottoms	Hexachlorobenzene	C6C150186001	0.1	0.05	mg/L	U	0.1			Oakland	2006
APW Tank Bottoms	Hexachlorobenzene	C6C310223001	0.1	0.05	mg/L	U	0.1	15	20	Highland	2006
APW Tank Bottoms	Hexachlorobenzene	C6I150307001	0.1	0.05	mg/L	U	0.1			El Monte	2006
APW Tank Bottoms	Hexachlorobenzene	C6L050260001	0.1	0.05	mg/L	U	0.1			Fresno	2006
APW Tank Bottoms	Hexachlorobenzene	C8H150273001	0.13	0.065	mg/L	U	0.13			Los Angeles	2008
APW Tank Bottoms	Hexachlorobenzene	C1D010430001	0.13	0.065	mg/L	U	0.13			El Monte	2011
APW Tank Bottoms	Hexachlorobenzene	180-50336-2	0.13	0.065	mg/L	U	0.13			Fresno	2015
APW Tank Bottoms	Hexachlorobutadiene	440-54550-1	0.001	0.0005	mg/L	U	50			Los Angeles	2013
APW Tank Bottoms	Hexachlorobutadiene	C9D010186001	0.05	0.025	mg/L	U	0.05			El Monte	2009

MATRIX	PARAMETER	LAB ID	RESULT	RANKED DATA	UNITS	QUALIFIER	REPORTING LIMIT	Uth VALUE	COUNT	FACILITY	YEAR
APW Tank Bottoms	Hexachlorobutadiene	180-17242-1	0.05	0.025	mg/L	U	0.05			Fresno	2012
APW Tank Bottoms	Hexachlorobutadiene	180-38043-1	0.05	0.025	mg/L	U	0.05			Fresno	2014
APW Tank Bottoms	Hexachlorobutadiene	180-38676-1	0.05	0.025	mg/L	U	0.05			Highland	2014
APW Tank Bottoms	Hexachlorobutadiene	180-50275-1	0.05	0.025	mg/L	U	0.05			Los Angeles	2015
APW Tank Bottoms	Hexachlorobutadiene	180-58154-1	0.05	0.025	mg/L	U	0.05			Santa Ana	2016
APW Tank Bottoms	Hexachlorobutadiene	180-70385-1	0.05	0.025	mg/L	U	0.05			Los Angeles	2017
APW Tank Bottoms	Hexachlorobutadiene	180-67797-1	0.05	0.025	mg/L	U	0.05			Santa Ana	2017
APW Tank Bottoms	Hexachlorobutadiene	180-60019-1	0.05	0.025	mg/L	U	0.05			Fresno	2017
APW Tank Bottoms	Hexachlorobutadiene	180-61551-1	0.05	0.025	mg/L	U	0.05			Los Angeles	2017
APW Tank Bottoms	Hexachlorobutadiene	180-81780-1	0.05	0.025	mg/L	U	0.05			Los Angeles	2018
APW Tank Bottoms	Hexachlorobutadiene	180-80850-1	0.05	0.025	mg/L	U	0.05			Sacramento	2018
APW Tank Bottoms	Hexachlorobutadiene	180-78622-1	0.05	0.025	mg/L	U	0.05			Santa Ana	2018
APW Tank Bottoms	Hexachlorobutadiene	C6C150186001	0.1	0.05	mg/L	U	0.1	15	21	Oakland	2006
APW Tank Bottoms	Hexachlorobutadiene	C6C310223001	0.1	0.05	mg/L	U	0.1			Highland	2006
APW Tank Bottoms	Hexachlorobutadiene	C6I150307001	0.1	0.05	mg/L	U	0.1			El Monte	2006
APW Tank Bottoms	Hexachlorobutadiene	C6L050260001	0.1	0.05	mg/L	U	0.1			Fresno	2006
APW Tank Bottoms	Hexachlorobutadiene	180-50336-2	0.13	0.065	mg/L	U	0.13			Fresno	2015
APW Tank Bottoms	Hexachlorobutadiene	C8H150273001	0.5	0.25	mg/L	U	0.5			Los Angeles	2008
APW Tank Bottoms	Hexachlorobutadiene	C1D010430001	0.5	0.25	mg/L	U	0.5			El Monte	2011
APW Tank Bottoms	Hexachloroethane	C9D010186001	0.05	0.025	mg/L	U	0.05			El Monte	2009
APW Tank Bottoms	Hexachloroethane	180-17242-1	0.05	0.025	mg/L	U	0.05			Fresno	2012
APW Tank Bottoms	Hexachloroethane	180-38043-1	0.05	0.025	mg/L	U	0.05			Fresno	2014
APW Tank Bottoms	Hexachloroethane	180-38676-1	0.05	0.025	mg/L	U	0.05			Highland	2014
APW Tank Bottoms	Hexachloroethane	180-50275-1	0.05	0.025	mg/L	U	0.05			Los Angeles	2015
APW Tank Bottoms	Hexachloroethane	180-58154-1	0.05	0.025	mg/L	U	0.05			Santa Ana	2016
APW Tank Bottoms	Hexachloroethane	180-70385-1	0.05	0.025	mg/L	U	0.05			Los Angeles	2017
APW Tank Bottoms	Hexachloroethane	180-67797-1	0.05	0.025	mg/L	U	0.05			Santa Ana	2017
APW Tank Bottoms	Hexachloroethane	180-60019-1	0.05	0.025	mg/L	U	0.05			Fresno	2017
APW Tank Bottoms	Hexachloroethane	180-61551-1	0.05	0.025	mg/L	U	0.05			Los Angeles	2017
APW Tank Bottoms	Hexachloroethane	180-81780-1	0.05	0.025	mg/L	U	0.05			Los Angeles	2018
APW Tank Bottoms	Hexachloroethane	180-80850-1	0.05	0.025	mg/L	U	0.05			Sacramento	2018
APW Tank Bottoms	Hexachloroethane	180-78622-1	0.05	0.025	mg/L	U	0.05			Santa Ana	2018
APW Tank Bottoms	Hexachloroethane	C6C150186001	0.1	0.05	mg/L	U	0.1			Oakland	2006
APW Tank Bottoms	Hexachloroethane	C6C310223001	0.1	0.05	mg/L	U	0.1	15	20	Highland	2006
APW Tank Bottoms	Hexachloroethane	C6I150307001	0.1	0.05	mg/L	U	0.1			El Monte	2006
APW Tank Bottoms	Hexachloroethane	C6L050260001	0.1	0.05	mg/L	U	0.1			Fresno	2006
APW Tank Bottoms	Hexachloroethane	180-50336-2	0.13	0.065	mg/L	U	0.13			Fresno	2015
APW Tank Bottoms	Hexachloroethane	C8H150273001	3	1.5	mg/L	U	3			Los Angeles	2008

MATRIX	PARAMETER	LAB ID	RESULT	RANKED DATA	UNITS	QUALIFIER	REPORTING LIMIT	Uth VALUE	COUNT	FACILITY	YEAR
APW Tank Bottoms	Hexachloroethane	C1D010430001	3	1.5	mg/L	U	3			El Monte	2011
APW Tank Bottoms	Ignitability	180-81780-1	>140	>140	Degrees F					Los Angeles	2018
APW Tank Bottoms	Lead	C8E080390001	0.03	0.015	mg/L	U	0.03			El Monte	2008
APW Tank Bottoms	Lead	C0K050586001	0.05	0.025	mg/L	U	0.05			Fresno	2010
APW Tank Bottoms	Lead	180-26073-1	0.047	0.047	mg/L	J	0.5			Highland	2013
APW Tank Bottoms	Lead	180-80850-1	0.1	0.05	mg/L	U	0.1			Sacramento	2018
APW Tank Bottoms	Lead	180-38043-1	0.052	0.052	mg/L	J	0.5			Fresno	2014
APW Tank Bottoms	Lead	180-26876-1	0.081	0.081	mg/L	J	0.5			Fresno	2013
APW Tank Bottoms	Lead	180-60019-1	0.094	0.094	mg/L	J	0.5			Fresno	2017
APW Tank Bottoms	Lead	180-17242-1	0.11	0.11	mg/L		0.05			Fresno	2012
APW Tank Bottoms	Lead	C8E080389001	0.14	0.14	mg/L		0.03			El Monte	2008
APW Tank Bottoms	Lead	C8H150273001	0.3	0.15	mg/L	U	0.3			Los Angeles	2008
APW Tank Bottoms	Lead	C9J160264001	0.15	0.15	mg/L		0.05			Highland	2010
APW Tank Bottoms	Lead	180-67797-1	0.18	0.18	mg/L		0.1			Santa Ana	2017
APW Tank Bottoms	Lead	C0J150414001	0.19	0.19	mg/L		0.05			Highland	2010
APW Tank Bottoms	Lead	440-54550-1	0.2	0.2	mg/L		0.03			Los Angeles	2013
APW Tank Bottoms	Lead	180-81780-1	0.22	0.22	mg/L	J	0.5			Los Angeles	2018
APW Tank Bottoms	Lead	C9K050460001	0.23	0.23	mg/L		0.05			Fresno	2010
APW Tank Bottoms	Lead	180-50275-1	0.24	0.24	mg/L	J	0.5			Los Angeles	2015
APW Tank Bottoms	Lead	C6C150186001	0.5	0.25	mg/L	U	0.5			Oakland	2006
APW Tank Bottoms	Lead	C6C310223001	0.5	0.25	mg/L	U	0.5			Highland	2006
APW Tank Bottoms	Lead	C6I150307001	0.5	0.25	mg/L	U	0.5			El Monte	2006
APW Tank Bottoms	Lead	C6L050260001	0.5	0.25	mg/L	U	0.5			Fresno	2006
APW Tank Bottoms	Lead	C8G220112001	0.5	0.25	mg/L	U	0.5			Highland	2008
APW Tank Bottoms	Lead	C8L030200001	0.5	0.25	mg/L	U	0.5			Fresno	2008
APW Tank Bottoms	Lead	C9D010186001	0.5	0.25	mg/L	U	0.5			El Monte	2009
APW Tank Bottoms	Lead	180-9155-1	0.27	0.27	mg/L		0.25			El Monte	2012
APW Tank Bottoms	Lead	C9G310286001	0.35	0.35	mg/L		0.05			El Monte	2009
APW Tank Bottoms	Lead	180-15368-1	0.35	0.35	mg/L		0.05			Highland	2012
APW Tank Bottoms	Lead	180-61551-1	0.36	0.36	mg/L	J	0.5			Los Angeles	2017
APW Tank Bottoms	Lead	180-11254-1	0.38	0.38	mg/L		0.03			Santa Ana	2012
APW Tank Bottoms	Lead	180-70385-1	0.38	0.38	mg/L	J	0.5			Los Angeles	2017
APW Tank Bottoms	Lead	180-11547-1	0.44	0.44	mg/L		0.03	31	48	Los Angeles	2012
APW Tank Bottoms	Lead	180-30866-1	0.46	0.46	mg/L	J	0.5			Sacramento	2014
APW Tank Bottoms	Lead	C1D010430001	0.49	0.49	mg/L		0.3			El Monte	2011
APW Tank Bottoms	Lead	180-58154-1	0.49	0.49	mg/L		0.1			Santa Ana	2016
APW Tank Bottoms	Lead	180-78622-1	0.54	0.54	mg/L		0.1			Santa Ana	2018
APW Tank Bottoms	Lead	C9H130284001	0.61	0.61	mg/L		0.03			El Monte	2009

MATRIX	PARAMETER	LAB ID	RESULT	RANKED DATA	UNITS	QUALIFIER	REPORTING LIMIT	Uth VALUE	COUNT	FACILITY	YEAR
APW Tank Bottoms	Lead	C9H130286001	0.81	0.81	mg/L		0.03			Los Angeles	2009
APW Tank Bottoms	Lead	180-38676-1	1.1	1.1	mg/L		1			Highland	2014
APW Tank Bottoms	Lead	C8A110289001	1.3	1.3	mg/L		0.5			Sacramento	2008
APW Tank Bottoms	Lead	C0J110402002	2.3	2.3	mg/L		0.05			Sacramento	2010
APW Tank Bottoms	Lead	C0F220562001	2.6	2.6	mg/L		0.03			Los Angeles	2010
APW Tank Bottoms	Lead	C0C300517001	2.8	2.8	mg/L		0.03			El Monte	2010
APW Tank Bottoms	Lead	180-4418-1	4.5	4.5	mg/L		0.03			Highland	2012
APW Tank Bottoms	Lead	180-5303-1	6	6	mg/L		0.03			Highland	2012
APW Tank Bottoms	Lead	180-1932-1	11	11	mg/L		0.03			Los Angeles	2011
APW Tank Bottoms	Lead	C0F220561001	17.2	17.2	mg/L		0.03			El Monte	2010
APW Tank Bottoms	Lead	180-50336-1	18	18	mg/L		0.5			Fresno	2015
APW Tank Bottoms	Lead	180-4700-1	85	85	mg/L		0.15			Fresno	2012
APW Tank Bottoms	Mercury	C6C150186001	0.0002	0.0001	mg/L	U	0.0002			Oakland	2006
APW Tank Bottoms	Mercury	C6C310223001	0.0002	0.0001	mg/L	U	0.0002			Highland	2006
APW Tank Bottoms	Mercury	C6I150307001	0.0002	0.0001	mg/L	U	0.0002			El Monte	2006
APW Tank Bottoms	Mercury	C6L050260001	0.0002	0.0001	mg/L	U	0.0002			Fresno	2006
APW Tank Bottoms	Mercury	C8A110289001	0.0002	0.0001	mg/L	U	0.0002			Sacramento	2008
APW Tank Bottoms	Mercury	C8G220112001	0.0002	0.0001	mg/L	U	0.0002			Highland	2008
APW Tank Bottoms	Mercury	C8L030200001	0.0002	0.0001	mg/L	U	0.0002			Fresno	2008
APW Tank Bottoms	Mercury	C9D010186001	0.0002	0.0001	mg/L	U	0.0002			El Monte	2009
APW Tank Bottoms	Mercury	C9G310286001	0.0002	0.0001	mg/L	U	0.0002			El Monte	2009
APW Tank Bottoms	Mercury	C9J160264001	0.0002	0.0001	mg/L	U	0.0002			Highland	2010
APW Tank Bottoms	Mercury	C9K050460001	0.0002	0.0001	mg/L	U	0.0002			Fresno	2010
APW Tank Bottoms	Mercury	C0J110402002	0.0002	0.0001	mg/L	U	0.0002			Sacramento	2010
APW Tank Bottoms	Mercury	C0J150414001	0.0002	0.0001	mg/L	U	0.0002			Highland	2010
APW Tank Bottoms	Mercury	C0K050586001	0.0002	0.0001	mg/L	U	0.0002			Fresno	2010
APW Tank Bottoms	Mercury	180-15368-1	0.0002	0.0001	mg/L	U	0.0002			Highland	2012
APW Tank Bottoms	Mercury	180-17242-1	0.0002	0.0001	mg/L	U	0.0002			Fresno	2012
APW Tank Bottoms	Mercury	180-9155-1	0.0002	0.0001	mg/L	U	0.0002			El Monte	2012
APW Tank Bottoms	Mercury	180-26073-1	0.0002	0.0001	mg/L	U	0.0002			Highland	2013
APW Tank Bottoms	Mercury	180-26876-1	0.0002	0.0001	mg/L	U	0.0002			Fresno	2013
APW Tank Bottoms	Mercury	180-38043-1	0.0002	0.0001	mg/L	U	0.0002			Fresno	2014
APW Tank Bottoms	Mercury	180-50275-1	0.0002	0.0001	mg/L	U	0.0002			Los Angeles	2015
APW Tank Bottoms	Mercury	180-70385-1	0.0002	0.0001	mg/L	U	0.0002			Los Angeles	2017
APW Tank Bottoms	Mercury	180-60019-1	0.0002	0.0001	mg/L	U	0.0002			Fresno	2017
APW Tank Bottoms	Mercury	180-61551-1	0.0002	0.0001	mg/L	U	0.0002			Los Angeles	2017
APW Tank Bottoms	Mercury	180-81780-1	0.0002	0.0001	mg/L	U	0.0002			Los Angeles	2018
APW Tank Bottoms	Mercury	180-30866-1	0.00067	0.00067	mg/L	B	0.0002			Sacramento	2014

MATRIX	PARAMETER	LAB ID	RESULT	RANKED DATA	UNITS	QUALIFIER	REPORTING LIMIT	Uth VALUE	COUNT	FACILITY	YEAR
APW Tank Bottoms	Mercury	C8E080389001	0.002	0.001	mg/L	U	0.002			El Monte	2008
APW Tank Bottoms	Mercury	C8E080390001	0.002	0.001	mg/L	U	0.002			El Monte	2008
APW Tank Bottoms	Mercury	C9H130284001	0.002	0.001	mg/L	U	0.002			El Monte	2009
APW Tank Bottoms	Mercury	C9H130286001	0.002	0.001	mg/L	U	0.002			Los Angeles	2009
APW Tank Bottoms	Mercury	C0F220562001	0.002	0.001	mg/L	U	0.002	31	48	Los Angeles	2010
APW Tank Bottoms	Mercury	180-11547-1	0.002	0.001	mg/L	U	0.002			Los Angeles	2012
APW Tank Bottoms	Mercury	180-11254-1	0.002	0.001	mg/L	U	0.002			Santa Ana	2012
APW Tank Bottoms	Mercury	180-5303-1	0.001	0.001	mg/L	J	0.002			Highland	2012
APW Tank Bottoms	Mercury	440-54550-1	0.002	0.001	mg/L	U	0.002			Los Angeles	2013
APW Tank Bottoms	Mercury	180-38676-1	0.002	0.001	mg/L	U	0.002			Highland	2014
APW Tank Bottoms	Mercury	180-58154-1	0.002	0.001	mg/L	U	0.002			Santa Ana	2016
APW Tank Bottoms	Mercury	180-67797-1	0.002	0.001	mg/L	U	0.002			Santa Ana	2017
APW Tank Bottoms	Mercury	180-80850-1	0.002	0.001	mg/L	U	0.002			Sacramento	2018
APW Tank Bottoms	Mercury	180-78622-1	0.002	0.001	mg/L	U	0.002			Santa Ana	2018
APW Tank Bottoms	Mercury	180-4418-1	0.002	0.002	mg/L	B	0.002			Highland	2012
APW Tank Bottoms	Mercury	180-1932-1	0.0031	0.0031	mg/L		0.002			Los Angeles	2011
APW Tank Bottoms	Mercury	C0C300517001	0.0089	0.0089	mg/L		0.0002			El Monte	2010
APW Tank Bottoms	Mercury	180-50336-1	0.013	0.013	mg/L		0.002			Fresno	2015
APW Tank Bottoms	Mercury	C8H150273001	0.033	0.0165	mg/L	U	0.033			Los Angeles	2008
APW Tank Bottoms	Mercury	C1D010430001	0.033	0.0165	mg/L	U	0.033			El Monte	2011
APW Tank Bottoms	Mercury	C0F220561001	0.028	0.028	mg/L		0.002			El Monte	2010
APW Tank Bottoms	Mercury	180-4700-1	0.12	0.12	mg/L		0.01			Fresno	2012
APW Tank Bottoms	Methylphenol, 3 & 4	180-81780-1	0.0087	0.0087	mg/L	J	0.05			Los Angeles	2018
APW Tank Bottoms	Methylphenol, 3 & 4	180-38043-1	0.05	0.025	mg/L	U	0.05			Fresno	2014
APW Tank Bottoms	Methylphenol, 3 & 4	180-58154-1	0.05	0.025	mg/L	U	0.05			Santa Ana	2016
APW Tank Bottoms	Methylphenol, 3 & 4	180-70385-1	0.05	0.025	mg/L	U	0.05			Los Angeles	2017
APW Tank Bottoms	Methylphenol, 3 & 4	180-67797-1	0.05	0.025	mg/L	U	0.05			Santa Ana	2017
APW Tank Bottoms	Methylphenol, 3 & 4	180-61551-1	0.05	0.025	mg/L	U	0.05			Los Angeles	2017
APW Tank Bottoms	Methylphenol, 3 & 4	180-80850-1	0.05	0.025	mg/L	U	0.05			Sacramento	2018
APW Tank Bottoms	Methylphenol, 3 & 4	180-78622-1	0.05	0.025	mg/L	U	0.05			Santa Ana	2018
APW Tank Bottoms	Methylphenol, 3 & 4	C6C150186001	0.1	0.05	mg/L	U	0.1			Oakland	2006
APW Tank Bottoms	Methylphenol, 3 & 4	C6C310223001	0.1	0.05	mg/L	U	0.1			Highland	2006
APW Tank Bottoms	Methylphenol, 3 & 4	C6I150307001	0.1	0.05	mg/L	U	0.1			El Monte	2006
APW Tank Bottoms	Methylphenol, 3 & 4	C6L050260001	0.1	0.05	mg/L	U	0.1			Fresno	2006
APW Tank Bottoms	Methylphenol, 3 & 4	C8H150273001	0.1	0.05	mg/L	U	0.1			Los Angeles	2008
APW Tank Bottoms	Methylphenol, 3 & 4	180-38676-1	0.054	0.054	mg/L		0.05			Highland	2014
APW Tank Bottoms	Methylphenol, 3 & 4	180-17242-1	0.059	0.059	mg/L		0.05	15	20	Fresno	2012
APW Tank Bottoms	Methylphenol, 3 & 4	180-50275-1	0.075	0.075	mg/L		0.05			Los Angeles	2015

MATRIX	PARAMETER	LAB ID	RESULT	RANKED DATA	UNITS	QUALIFIER	REPORTING LIMIT	Uth VALUE	COUNT	FACILITY	YEAR
APW Tank Bottoms	Methylphenol, 3 & 4	180-60019-1	0.13	0.13	mg/L		0.05			Fresno	2017
APW Tank Bottoms	Methylphenol, 3 & 4	C9D010186001	0.14	0.14	mg/L		0.05			El Monte	2009
APW Tank Bottoms	Methylphenol, 3 & 4	C1D010430001	1	0.5	mg/L	U	1			El Monte	2011
APW Tank Bottoms	Methylphenol, 3 & 4	180-50336-2	1	0.5	mg/L	U	1			Fresno	2015
APW Tank Bottoms	Nitrobenzene	C9D010186001	0.05	0.025	mg/L	U	0.05			El Monte	2009
APW Tank Bottoms	Nitrobenzene	180-17242-1	0.05	0.025	mg/L	U	0.05			Fresno	2012
APW Tank Bottoms	Nitrobenzene	180-38043-1	0.05	0.025	mg/L	U	0.05			Fresno	2014
APW Tank Bottoms	Nitrobenzene	180-38676-1	0.05	0.025	mg/L	U	0.05			Highland	2014
APW Tank Bottoms	Nitrobenzene	180-50275-1	0.05	0.025	mg/L	U	0.05			Los Angeles	2015
APW Tank Bottoms	Nitrobenzene	180-58154-1	0.05	0.025	mg/L	U	0.05			Santa Ana	2016
APW Tank Bottoms	Nitrobenzene	180-70385-1	0.05	0.025	mg/L	U	0.05			Los Angeles	2017
APW Tank Bottoms	Nitrobenzene	180-67797-1	0.05	0.025	mg/L	U	0.05			Santa Ana	2017
APW Tank Bottoms	Nitrobenzene	180-60019-1	0.05	0.025	mg/L	U	0.05			Fresno	2017
APW Tank Bottoms	Nitrobenzene	180-61551-1	0.05	0.025	mg/L	U	0.05			Los Angeles	2017
APW Tank Bottoms	Nitrobenzene	180-81780-1	0.05	0.025	mg/L	U	0.05			Los Angeles	2018
APW Tank Bottoms	Nitrobenzene	180-80850-1	0.05	0.025	mg/L	U	0.05			Sacramento	2018
APW Tank Bottoms	Nitrobenzene	180-78622-1	0.05	0.025	mg/L	U	0.05			Santa Ana	2018
APW Tank Bottoms	Nitrobenzene	C6C150186001	0.1	0.05	mg/L	U	0.1			Oakland	2006
APW Tank Bottoms	Nitrobenzene	C6C310223001	0.1	0.05	mg/L	U	0.1	15	20	Highland	2006
APW Tank Bottoms	Nitrobenzene	C6I150307001	0.1	0.05	mg/L	U	0.1			El Monte	2006
APW Tank Bottoms	Nitrobenzene	C6L050260001	0.1	0.05	mg/L	U	0.1			Fresno	2006
APW Tank Bottoms	Nitrobenzene	C8H150273001	0.1	0.05	mg/L	U	0.1			Los Angeles	2008
APW Tank Bottoms	Nitrobenzene	C1D010430001	1	0.5	mg/L	U	1			El Monte	2011
APW Tank Bottoms	Nitrobenzene	180-50336-2	1	0.5	mg/L	U	1			Fresno	2015
APW Tank Bottoms	Pentachlorophenol	180-50336-2	0.13	0.065	mg/L	U	0.13			Fresno	2015
APW Tank Bottoms	Pentachlorophenol	C9D010186001	0.25	0.125	mg/L	U	0.25			El Monte	2009
APW Tank Bottoms	Pentachlorophenol	180-17242-1	0.25	0.125	mg/L	U	0.25			Fresno	2012
APW Tank Bottoms	Pentachlorophenol	180-38043-1	0.25	0.125	mg/L	U	0.25			Fresno	2014
APW Tank Bottoms	Pentachlorophenol	180-38676-1	0.25	0.125	mg/L	U	0.25			Highland	2014
APW Tank Bottoms	Pentachlorophenol	180-50275-1	0.25	0.125	mg/L	U	0.25			Los Angeles	2015
APW Tank Bottoms	Pentachlorophenol	180-58154-1	0.25	0.125	mg/L	U	0.25			Santa Ana	2016
APW Tank Bottoms	Pentachlorophenol	180-70385-1	0.25	0.125	mg/L	U	0.25			Los Angeles	2017
APW Tank Bottoms	Pentachlorophenol	180-67797-1	0.25	0.125	mg/L	U	0.25			Santa Ana	2017
APW Tank Bottoms	Pentachlorophenol	180-60019-1	0.25	0.125	mg/L	U	0.25			Fresno	2017
APW Tank Bottoms	Pentachlorophenol	180-61551-1	0.25	0.125	mg/L	U	0.25			Los Angeles	2017
APW Tank Bottoms	Pentachlorophenol	180-81780-1	0.25	0.125	mg/L	U	0.25			Los Angeles	2018
APW Tank Bottoms	Pentachlorophenol	180-80850-1	0.25	0.125	mg/L	U	0.25			Sacramento	2018
APW Tank Bottoms	Pentachlorophenol	180-78622-1	0.25	0.125	mg/L	U	0.25			Santa Ana	2018

MATRIX	PARAMETER	LAB ID	RESULT	RANKED DATA	UNITS	QUALIFIER	REPORTING LIMIT	Uth VALUE	COUNT	FACILITY	YEAR
APW Tank Bottoms	Pentachlorophenol	C6C150186001	0.5	0.25	mg/L	U	0.5	15	20	Oakland	2006
APW Tank Bottoms	Pentachlorophenol	C6C310223001	0.5	0.25	mg/L	U	0.5			Highland	2006
APW Tank Bottoms	Pentachlorophenol	C6I150307001	0.5	0.25	mg/L	U	0.5			El Monte	2006
APW Tank Bottoms	Pentachlorophenol	C6L050260001	0.5	0.25	mg/L	U	0.5			Fresno	2006
APW Tank Bottoms	Pentachlorophenol	C8H150273001	100	50	mg/L	U	100			Los Angeles	2008
APW Tank Bottoms	Pentachlorophenol	C1D010430001	100	50	mg/L	U	100			El Monte	2011
APW Tank Bottoms	pH	180-50336-1	4.9	4.9	SU	HF	0.1			Fresno	2015
APW Tank Bottoms	pH	180-30866-1	6.48	6.48	No Units		0.1			Sacramento	2014
APW Tank Bottoms	pH	C8A110289001	6.7	6.7	No Units					Sacramento	2008
APW Tank Bottoms	pH	C0J110402001	6.9	6.9	No Units					Sacramento	2010
APW Tank Bottoms	pH	180-38676-1	7.25	7.25	SU	H	0.1			Highland	2014
APW Tank Bottoms	pH	180-38043-1	7.5	7.5	No Units		0.1			Fresno	2014
APW Tank Bottoms	pH	180-60019-1	7.5	7.5	SU	HF	0.1			Fresno	2017
APW Tank Bottoms	pH	C8E080390001	7.7	7.7	No Units		0.1			El Monte	2008
APW Tank Bottoms	pH	180-81780-1	8.4	8.4	SU	HF	0.1			Los Angeles	2018
APW Tank Bottoms	pH	180-50275-1	8.66	8.66	SU		0.1			Los Angeles	2015
APW Tank Bottoms	pH	180-70385-1	8.7	8.7	SU	HF	0.1			Los Angeles	2017
APW Tank Bottoms	pH	180-61551-1	8.7	8.7	SU	HF	0.1			Los Angeles	2017
APW Tank Bottoms	pH	440-54550-1	8.73	8.73	No Units	HF	0.1			Los Angeles	2013
APW Tank Bottoms	pH	180-26073-1	9.18	9.18	No Units	H	0.1			Highland	2013
APW Tank Bottoms	pH	180-17242-1	9.19	9.19	No Units		0.1			Fresno	2012
APW Tank Bottoms	pH	180-58154-1	9.2	9.2	SU	HF	0.1			Santa Ana	2016
APW Tank Bottoms	pH	180-26876-1	9.24	9.24	No Units		0.1			Fresno	2013
APW Tank Bottoms	pH	C8H150273001	9.4	9.4	No Units					Los Angeles	2008
APW Tank Bottoms	pH	C8G220112001	9.5	9.5	No Units					Highland	2008
APW Tank Bottoms	pH	C6C310223001	9.7	9.7	No Units					Highland	2006
APW Tank Bottoms	pH	C8E080389001	9.8	9.8	No Units		0.1			El Monte	2008
APW Tank Bottoms	pH	180-78622-1	9.8	9.8	SU	HF	0.1			Santa Ana	2018
APW Tank Bottoms	pH	180-4700-1	9.9	9.9	No Units	HF	0.1			Fresno	2012
APW Tank Bottoms	pH	180-15368-1	9.92	9.92	No Units	H	0.1			Highland	2012
APW Tank Bottoms	pH	180-11547-1	9.96	9.96	No Units	HF	0.1			Los Angeles	2012
APW Tank Bottoms	pH	180-1932-1	10	10	No Units	HF	0.1			Los Angeles	2011
APW Tank Bottoms	pH	180-4418-1	10	10	No Units	HF	0.1			Highland	2012
APW Tank Bottoms	pH	180-5303-1	10	10	No Units	HF	0.1			Highland	2012
APW Tank Bottoms	pH	C0F220562001	10.1	10.1	No Units		0.1			Los Angeles	2010
APW Tank Bottoms	pH	180-80850-1	10.1	10.1	SU	HF	0.1	30	46	Sacramento	2018
APW Tank Bottoms	pH	C6I150307001	10.2	10.2	No Units					El Monte	2006
APW Tank Bottoms	pH	C6L050260001	10.2	10.2	No Units					Fresno	2006

MATRIX	PARAMETER	LAB ID	RESULT	RANKED DATA	UNITS	QUALIFIER	REPORTING LIMIT	Uth VALUE	COUNT	FACILITY	YEAR
APW Tank Bottoms	pH	C0F220561001	10.2	10.2	No Units		0.1			El Monte	2010
APW Tank Bottoms	pH	C0K050586001	10.2	10.2	No Units					Fresno	2010
APW Tank Bottoms	pH	C1D010430001	10.2	10.2	No Units					El Monte	2011
APW Tank Bottoms	pH	C9H130286001	10.3	10.3	No Units		0.1			Los Angeles	2009
APW Tank Bottoms	pH	C9J160264002	10.3	10.3	No Units		0.1			Highland	2010
APW Tank Bottoms	pH	180-11254-1	10.3	10.3	No Units	HF	0.1			Santa Ana	2012
APW Tank Bottoms	pH	180-67797-1	10.3	10.3	SU	HF	0.1			Santa Ana	2017
APW Tank Bottoms	pH	C8L030200001	10.4	10.4	No Units					Fresno	2008
APW Tank Bottoms	pH	C9D010186001	10.4	10.4	No Units					El Monte	2009
APW Tank Bottoms	pH	C9H130284001	10.4	10.4	No Units		0.1			El Monte	2009
APW Tank Bottoms	pH	C9K050460001	10.4	10.4	No Units					Fresno	2010
APW Tank Bottoms	pH	C0J150414001	10.4	10.4	No Units					Highland	2010
APW Tank Bottoms	pH	180-9155-1	10.4	10.4	No Units		0.1			El Monte	2012
APW Tank Bottoms	pH	C6C150186001	10.5	10.5	No Units					Oakland	2006
APW Tank Bottoms	Pyridine	C9D010186001	0.1	0.05	mg/L	U	0.1			El Monte	2009
APW Tank Bottoms	Pyridine	180-17242-1	0.1	0.05	mg/L	U	0.1			Fresno	2012
APW Tank Bottoms	Pyridine	180-38043-1	0.1	0.05	mg/L	U	0.1			Fresno	2014
APW Tank Bottoms	Pyridine	180-38676-1	0.1	0.05	mg/L	U	0.1			Highland	2014
APW Tank Bottoms	Pyridine	180-50275-1	0.1	0.05	mg/L	U	0.1			Los Angeles	2015
APW Tank Bottoms	Pyridine	180-58154-1	0.1	0.05	mg/L	U	0.1			Santa Ana	2016
APW Tank Bottoms	Pyridine	180-70385-1	0.1	0.05	mg/L	U	0.1			Los Angeles	2017
APW Tank Bottoms	Pyridine	180-67797-1	0.1	0.05	mg/L	U	0.1			Santa Ana	2017
APW Tank Bottoms	Pyridine	180-60019-1	0.1	0.05	mg/L	U *	0.1			Fresno	2017
APW Tank Bottoms	Pyridine	180-61551-1	0.1	0.05	mg/L	U	0.1			Los Angeles	2017
APW Tank Bottoms	Pyridine	180-81780-1	0.1	0.05	mg/L	U	0.1			Los Angeles	2018
APW Tank Bottoms	Pyridine	180-80850-1	0.1	0.05	mg/L	U	0.1			Sacramento	2018
APW Tank Bottoms	Pyridine	180-78622-1	0.1	0.05	mg/L	U	0.1			Santa Ana	2018
APW Tank Bottoms	Pyridine	C6C150186001	0.2	0.1	mg/L	U	0.2			Oakland	2006
APW Tank Bottoms	Pyridine	C6C310223001	0.2	0.1	mg/L	U	0.2	15	20	Highland	2006
APW Tank Bottoms	Pyridine	C6I150307001	0.2	0.1	mg/L	U	0.2			El Monte	2006
APW Tank Bottoms	Pyridine	C6L050260001	0.2	0.1	mg/L	U	0.2			Fresno	2006
APW Tank Bottoms	Pyridine	C8H150273001	0.5	0.25	mg/L	U	0.5			Los Angeles	2008
APW Tank Bottoms	Pyridine	C1D010430001	5	2.5	mg/L	U	5			El Monte	2011
APW Tank Bottoms	Pyridine	180-50336-2	5	2.5	mg/L	U	5			Fresno	2015
APW Tank Bottoms	Selenium	180-17242-1	0.0073	0.0073	mg/L	J B	0.05			Fresno	2012
APW Tank Bottoms	Selenium	180-15368-1	0.013	0.013	mg/L	J B	0.05			Highland	2012
APW Tank Bottoms	Selenium	180-38043-1	0.021	0.021	mg/L	J	0.5			Fresno	2014
APW Tank Bottoms	Selenium	C8E080389001	0.05	0.025	mg/L	U	0.05			El Monte	2008

MATRIX	PARAMETER	LAB ID	RESULT	RANKED DATA	UNITS	QUALIFIER	REPORTING LIMIT	Uth VALUE	COUNT	FACILITY	YEAR
APW Tank Bottoms	Selenium	C8E080390001	0.05	0.025	mg/L	U	0.05			El Monte	2008
APW Tank Bottoms	Selenium	C9G310286001	0.05	0.025	mg/L	U	0.05			El Monte	2009
APW Tank Bottoms	Selenium	C0C300517001	0.05	0.025	mg/L	U	0.05			El Monte	2010
APW Tank Bottoms	Selenium	C0F220561001	0.05	0.025	mg/L	U	0.05			El Monte	2010
APW Tank Bottoms	Selenium	C0F220562001	0.05	0.025	mg/L	U	0.05			Los Angeles	2010
APW Tank Bottoms	Selenium	C9J160264001	0.05	0.025	mg/L	U	0.05			Highland	2010
APW Tank Bottoms	Selenium	C9K050460001	0.05	0.025	mg/L	U	0.05			Fresno	2010
APW Tank Bottoms	Selenium	C0J110402002	0.05	0.025	mg/L	U	0.05			Sacramento	2010
APW Tank Bottoms	Selenium	C0J150414001	0.05	0.025	mg/L	U	0.05			Highland	2010
APW Tank Bottoms	Selenium	C0K050586001	0.05	0.025	mg/L	U	0.05			Fresno	2010
APW Tank Bottoms	Selenium	180-5303-1	0.05	0.025	mg/L	U	0.05			Highland	2012
APW Tank Bottoms	Selenium	180-11254-1	0.034	0.034	mg/L	J	0.05			Santa Ana	2012
APW Tank Bottoms	Selenium	180-4418-1	0.04	0.04	mg/L	J	0.05			Highland	2012
APW Tank Bottoms	Selenium	180-67797-1	0.041	0.041	mg/L	J	0.1			Santa Ana	2017
APW Tank Bottoms	Selenium	180-61551-1	0.046	0.046	mg/L	J	0.5			Los Angeles	2017
APW Tank Bottoms	Selenium	440-54550-1	0.1	0.05	mg/L	U	0.05			Los Angeles	2013
APW Tank Bottoms	Selenium	180-78622-1	0.1	0.05	mg/L	U	0.1			Santa Ana	2018
APW Tank Bottoms	Selenium	180-1932-1	0.051	0.051	mg/L		0.05			Los Angeles	2011
APW Tank Bottoms	Selenium	180-11547-1	0.051	0.051	mg/L		0.05			Los Angeles	2012
APW Tank Bottoms	Selenium	C9H130286001	0.067	0.067	mg/L		0.05			Los Angeles	2009
APW Tank Bottoms	Selenium	180-58154-1	0.076	0.076	mg/L	J	0.1			Santa Ana	2016
APW Tank Bottoms	Selenium	C9H130284001	0.078	0.078	mg/L		0.05			El Monte	2009
APW Tank Bottoms	Selenium	C6C150186001	0.25	0.125	mg/L	U	0.25			Oakland	2006
APW Tank Bottoms	Selenium	C6C310223001	0.25	0.125	mg/L	U	0.25			Highland	2006
APW Tank Bottoms	Selenium	C6I150307001	0.25	0.125	mg/L	U	0.25			El Monte	2006
APW Tank Bottoms	Selenium	C6L050260001	0.25	0.125	mg/L	U	0.25			Fresno	2006
APW Tank Bottoms	Selenium	C8A110289001	0.25	0.125	mg/L	U	0.25	31	48	Sacramento	2008
APW Tank Bottoms	Selenium	C8G220112001	0.25	0.125	mg/L	U	0.25			Highland	2008
APW Tank Bottoms	Selenium	C8L030200001	0.25	0.125	mg/L	U	0.25			Fresno	2008
APW Tank Bottoms	Selenium	C9D010186001	0.25	0.125	mg/L	U	0.25			El Monte	2009
APW Tank Bottoms	Selenium	180-9155-1	0.25	0.125	mg/L	U	0.25			El Monte	2012
APW Tank Bottoms	Selenium	180-80850-1	0.15	0.15	mg/L		0.1			Sacramento	2018
APW Tank Bottoms	Selenium	C8H150273001	0.5	0.25	mg/L	U	0.5			Los Angeles	2008
APW Tank Bottoms	Selenium	C1D010430001	0.5	0.25	mg/L	U	0.5			El Monte	2011
APW Tank Bottoms	Selenium	180-26073-1	0.5	0.25	mg/L	U	0.5			Highland	2013
APW Tank Bottoms	Selenium	180-26876-1	0.5	0.25	mg/L	U	0.5			Fresno	2013
APW Tank Bottoms	Selenium	180-30866-1	0.5	0.25	mg/L	U	0.5			Sacramento	2014
APW Tank Bottoms	Selenium	180-50275-1	0.5	0.25	mg/L	U	0.5			Los Angeles	2015

MATRIX	PARAMETER	LAB ID	RESULT	RANKED DATA	UNITS	QUALIFIER	REPORTING LIMIT	Uth VALUE	COUNT	FACILITY	YEAR
APW Tank Bottoms	Selenium	180-70385-1	0.5	0.25	mg/L	U	0.5			Los Angeles	2017
APW Tank Bottoms	Selenium	180-60019-1	0.5	0.25	mg/L	U	0.5			Fresno	2017
APW Tank Bottoms	Selenium	180-81780-1	0.5	0.25	mg/L	U	0.5			Los Angeles	2018
APW Tank Bottoms	Selenium	180-38676-1	0.32	0.32	mg/L	J B	1			Highland	2014
APW Tank Bottoms	Selenium	180-4700-1	0.45	0.45	mg/L		0.25			Fresno	2012
APW Tank Bottoms	Selenium	180-50336-1	0.46	0.46	mg/L	J	0.5			Fresno	2015
APW Tank Bottoms	Silver	180-80850-1	0.0093	0.0093	mg/L	J	0.05			Sacramento	2018
APW Tank Bottoms	Silver	C8E080389001	0.05	0.025	mg/L	U	0.05			El Monte	2008
APW Tank Bottoms	Silver	C8E080390001	0.05	0.025	mg/L	U	0.05			El Monte	2008
APW Tank Bottoms	Silver	C9G310286001	0.05	0.025	mg/L	U	0.05			El Monte	2009
APW Tank Bottoms	Silver	C9H130284001	0.05	0.025	mg/L	U	0.05			El Monte	2009
APW Tank Bottoms	Silver	C9H130286001	0.05	0.025	mg/L	U	0.05			Los Angeles	2009
APW Tank Bottoms	Silver	C0C300517001	0.05	0.025	mg/L	U	0.05			El Monte	2010
APW Tank Bottoms	Silver	C9J160264001	0.05	0.025	mg/L	U	0.05			Highland	2010
APW Tank Bottoms	Silver	C9K050460001	0.05	0.025	mg/L	U	0.05			Fresno	2010
APW Tank Bottoms	Silver	C0J110402002	0.05	0.025	mg/L	U	0.05			Sacramento	2010
APW Tank Bottoms	Silver	C0J150414001	0.05	0.025	mg/L	U	0.05			Highland	2010
APW Tank Bottoms	Silver	C0K050586001	0.05	0.025	mg/L	U	0.05			Fresno	2010
APW Tank Bottoms	Silver	180-15368-1	0.05	0.025	mg/L	U	0.05			Highland	2012
APW Tank Bottoms	Silver	180-17242-1	0.05	0.025	mg/L	U	0.05			Fresno	2012
APW Tank Bottoms	Silver	180-11547-1	0.05	0.025	mg/L	U	0.05			Los Angeles	2012
APW Tank Bottoms	Silver	180-11254-1	0.05	0.025	mg/L	U	0.05			Santa Ana	2012
APW Tank Bottoms	Silver	180-58154-1	0.05	0.025	mg/L	U	0.05			Santa Ana	2016
APW Tank Bottoms	Silver	180-67797-1	0.05	0.025	mg/L	U	0.05			Santa Ana	2017
APW Tank Bottoms	Silver	180-78622-1	0.05	0.025	mg/L	U	0.05			Santa Ana	2018
APW Tank Bottoms	Silver	180-4418-1	0.029	0.029	mg/L	J	0.05			Highland	2012
APW Tank Bottoms	Silver	180-5303-1	0.03	0.03	mg/L	J	0.05			Highland	2012
APW Tank Bottoms	Silver	C0F220562001	0.072	0.072	mg/L		0.05			Los Angeles	2010
APW Tank Bottoms	Silver	440-54550-1	0.2	0.1	mg/L	U	0.05			Los Angeles	2013
APW Tank Bottoms	Silver	180-9155-1	0.25	0.125	mg/L	U	0.25			El Monte	2012
APW Tank Bottoms	Silver	180-1932-1	0.14	0.14	mg/L		0.05			Los Angeles	2011
APW Tank Bottoms	Silver	C0F220561001	0.19	0.19	mg/L		0.05			El Monte	2010
APW Tank Bottoms	Silver	C6C150186001	0.5	0.25	mg/L	U	0.5			Oakland	2006
APW Tank Bottoms	Silver	C6C310223001	0.5	0.25	mg/L	U	0.5			Highland	2006
APW Tank Bottoms	Silver	C6I150307001	0.5	0.25	mg/L	U	0.5			El Monte	2006
APW Tank Bottoms	Silver	C6L050260001	0.5	0.25	mg/L	U	0.5			Fresno	2006
APW Tank Bottoms	Silver	C8A110289001	0.5	0.25	mg/L	U	0.5	31	48	Sacramento	2008
APW Tank Bottoms	Silver	C8G220112001	0.5	0.25	mg/L	U	0.5			Highland	2008

MATRIX	PARAMETER	LAB ID	RESULT	RANKED DATA	UNITS	QUALIFIER	REPORTING LIMIT	Uth VALUE	COUNT	FACILITY	YEAR
APW Tank Bottoms	Silver	C8H150273001	0.5	0.25	mg/L	U	0.5			Los Angeles	2008
APW Tank Bottoms	Silver	C8L030200001	0.5	0.25	mg/L	U	0.5			Fresno	2008
APW Tank Bottoms	Silver	C9D010186001	0.5	0.25	mg/L	U	0.5			El Monte	2009
APW Tank Bottoms	Silver	C1D010430001	0.5	0.25	mg/L	U	0.5			El Monte	2011
APW Tank Bottoms	Silver	180-26073-1	0.5	0.25	mg/L	U	0.5			Highland	2013
APW Tank Bottoms	Silver	180-26876-1	0.5	0.25	mg/L	U	0.5			Fresno	2013
APW Tank Bottoms	Silver	180-30866-1	0.5	0.25	mg/L	U	0.5			Sacramento	2014
APW Tank Bottoms	Silver	180-38043-1	0.5	0.25	mg/L	U	0.5			Fresno	2014
APW Tank Bottoms	Silver	180-38676-1	0.5	0.25	mg/L	U	0.5			Highland	2014
APW Tank Bottoms	Silver	180-50275-1	0.5	0.25	mg/L	U	0.5			Los Angeles	2015
APW Tank Bottoms	Silver	180-70385-1	0.5	0.25	mg/L	U	0.5			Los Angeles	2017
APW Tank Bottoms	Silver	180-60019-1	0.5	0.25	mg/L	U	0.5			Fresno	2017
APW Tank Bottoms	Silver	180-61551-1	0.5	0.25	mg/L	U	0.5			Los Angeles	2017
APW Tank Bottoms	Silver	180-81780-1	0.5	0.25	mg/L	U	0.5			Los Angeles	2018
APW Tank Bottoms	Silver	180-50336-1	0.5	0.5	mg/L		0.25			Fresno	2015
APW Tank Bottoms	Silver	180-4700-1	0.56	0.56	mg/L		0.05			Fresno	2012
APW Tank Bottoms	Specific Gravity	180-78622-1	1	1	No Unit		0.01			Santa Ana	2018
APW Tank Bottoms	Tetrachloroethene	180-15368-1	0.042	0.042	mg/L	J	0.2			Highland	2012
APW Tank Bottoms	Tetrachloroethene	C9G310286001	0.054	0.054	mg/L		0.05			El Monte	2009
APW Tank Bottoms	Tetrachloroethene	180-17242-1	0.07	0.07	mg/L	J	0.2			Fresno	2012
APW Tank Bottoms	Tetrachloroethene	180-50275-1	0.08	0.08	mg/L	J	0.2			Los Angeles	2015
APW Tank Bottoms	Tetrachloroethene	180-9155-1	0.085	0.085	mg/L	J	0.2			El Monte	2012
APW Tank Bottoms	Tetrachloroethene	180-30866-1	0.096	0.096	mg/L	J	0.2			Sacramento	2014
APW Tank Bottoms	Tetrachloroethene	C6L050260001	0.2	0.1	mg/L	U	0.2			Fresno	2006
APW Tank Bottoms	Tetrachloroethene	C8A110289001	0.2	0.1	mg/L	U	0.2			Sacramento	2008
APW Tank Bottoms	Tetrachloroethene	C8E080389001	0.2	0.1	mg/L	U	0.2			El Monte	2008
APW Tank Bottoms	Tetrachloroethene	C8E080390001	0.2	0.1	mg/L	U	0.2			El Monte	2008
APW Tank Bottoms	Tetrachloroethene	C8G220112001	0.2	0.1	mg/L	U	0.2			Highland	2008
APW Tank Bottoms	Tetrachloroethene	C9D010186001	0.2	0.1	mg/L	U	0.2			El Monte	2009
APW Tank Bottoms	Tetrachloroethene	C9J160264001	0.2	0.1	mg/L	U	0.2			Highland	2010
APW Tank Bottoms	Tetrachloroethene	C9K050460001	0.2	0.1	mg/L	U	0.2			Fresno	2010
APW Tank Bottoms	Tetrachloroethene	C0J150414001	0.2	0.1	mg/L	U	0.2			Highland	2010
APW Tank Bottoms	Tetrachloroethene	C0K050586001	0.2	0.1	mg/L	U	0.2			Fresno	2010
APW Tank Bottoms	Tetrachloroethene	180-11547-1	0.2	0.1	mg/L	U	0.2			Los Angeles	2012
APW Tank Bottoms	Tetrachloroethene	180-11254-1	0.2	0.1	mg/L	U	0.2			Santa Ana	2012
APW Tank Bottoms	Tetrachloroethene	180-26073-1	0.2	0.1	mg/L	U	200			Highland	2013
APW Tank Bottoms	Tetrachloroethene	180-26876-1	0.2	0.1	mg/L	U	0.2			Fresno	2013
APW Tank Bottoms	Tetrachloroethene	180-70385-1	0.2	0.1	mg/L	U	0.2			Los Angeles	2017

MATRIX	PARAMETER	LAB ID	RESULT	RANKED DATA	UNITS	QUALIFIER	REPORTING LIMIT	Uth VALUE	COUNT	FACILITY	YEAR
APW Tank Bottoms	Tetrachloroethene	180-61551-1	0.2	0.1	mg/L	U	0.2			Los Angeles	2017
APW Tank Bottoms	Tetrachloroethene	180-81780-1	0.2	0.1	mg/L	U	0.2			Los Angeles	2018
APW Tank Bottoms	Tetrachloroethene	180-80850-1	0.2	0.1	mg/L	U	0.2			Sacramento	2018
APW Tank Bottoms	Tetrachloroethene	180-38043-1	0.14	0.14	mg/L	J	0.2			Fresno	2014
APW Tank Bottoms	Tetrachloroethene	C6I150307001	0.18	0.18	mg/L		0.05			El Monte	2006
APW Tank Bottoms	Tetrachloroethene	C0J110402002	0.21	0.21	mg/L		0.2			Sacramento	2010
APW Tank Bottoms	Tetrachloroethene	C1D010430001	0.5	0.25	mg/L	U	0.5			El Monte	2011
APW Tank Bottoms	Tetrachloroethene	180-60019-1	0.25	0.25	mg/L		0.2			Fresno	2017
APW Tank Bottoms	Tetrachloroethene	C6C310223001	0.48	0.48	mg/L		0.05			Highland	2006
APW Tank Bottoms	Tetrachloroethene	C6C150186001	0.49	0.49	mg/L		0.2	31	48	Oakland	2006
APW Tank Bottoms	Tetrachloroethene	C9H130284001	1.2	0.6	mg/L	U	1.2			El Monte	2009
APW Tank Bottoms	Tetrachloroethene	C8L030200001	0.71	0.71	mg/L		0.2			Fresno	2008
APW Tank Bottoms	Tetrachloroethene	180-38676-1	0.84	0.84	mg/L		0.2			Highland	2014
APW Tank Bottoms	Tetrachloroethene	180-58154-1	0.87	0.87	mg/L		0.2			Santa Ana	2016
APW Tank Bottoms	Tetrachloroethene	440-54550-1	1.1	1.1	mg/L		0.2			Los Angeles	2013
APW Tank Bottoms	Tetrachloroethene	180-67797-1	1.2	1.2	mg/L		0.2			Santa Ana	2017
APW Tank Bottoms	Tetrachloroethene	C0C300517001	1.8	1.8	mg/L		0.2			El Monte	2010
APW Tank Bottoms	Tetrachloroethene	180-78622-1	2	2	mg/L		0.2			Santa Ana	2018
APW Tank Bottoms	Tetrachloroethene	180-5303-1	2.3	2.3	mg/L	H	0.2			Highland	2012
APW Tank Bottoms	Tetrachloroethene	C0F220562001	4.5	4.5	mg/L		0.5			Los Angeles	2010
APW Tank Bottoms	Tetrachloroethene	180-4700-1	5.3	5.3	mg/L		0.2			Fresno	2012
APW Tank Bottoms	Tetrachloroethene	C0F220561001	5.4	5.4	mg/L		0.5			El Monte	2010
APW Tank Bottoms	Tetrachloroethene	C9H130286001	5.7	5.7	mg/L		1			Los Angeles	2009
APW Tank Bottoms	Tetrachloroethene	C8H150273001	7.9	7.9	mg/L		0.25			Los Angeles	2008
APW Tank Bottoms	Tetrachloroethene	180-4418-1	9.9	9.9	mg/L		0.2			Highland	2012
APW Tank Bottoms	Tetrachloroethene	180-1932-1	59	59	mg/L		2			Los Angeles	2011
APW Tank Bottoms	Tetrachloroethene	180-50336-1	1900	1900	mg/L		100			Fresno	2015
APW Tank Bottoms	Trichloroethene	C9G310286001	0.05	0.025	mg/L	U	0.05			El Monte	2009
APW Tank Bottoms	Trichloroethene	180-60019-1	0.057	0.057	mg/L	J	0.2			Fresno	2017
APW Tank Bottoms	Trichloroethene	180-67797-1	0.061	0.061	mg/L	J	0.2			Santa Ana	2017
APW Tank Bottoms	Trichloroethene	180-61551-1	0.061	0.061	mg/L	J	0.2			Los Angeles	2017
APW Tank Bottoms	Trichloroethene	180-17242-1	0.07	0.07	mg/L	J	0.2			Fresno	2012
APW Tank Bottoms	Trichloroethene	180-78622-1	0.074	0.074	mg/L	J	0.2			Santa Ana	2018
APW Tank Bottoms	Trichloroethene	C8A110289001	0.2	0.1	mg/L	U	0.2			Sacramento	2008
APW Tank Bottoms	Trichloroethene	C8E080389001	0.2	0.1	mg/L	U	0.2			El Monte	2008
APW Tank Bottoms	Trichloroethene	C8E080390001	0.2	0.1	mg/L	U	0.2			El Monte	2008
APW Tank Bottoms	Trichloroethene	C9D010186001	0.2	0.1	mg/L	U	0.2			El Monte	2009
APW Tank Bottoms	Trichloroethene	C0C300517001	0.2	0.1	mg/L	U	0.2			El Monte	2010

MATRIX	PARAMETER	LAB ID	RESULT	RANKED DATA	UNITS	QUALIFIER	REPORTING LIMIT	Uth VALUE	COUNT	FACILITY	YEAR
APW Tank Bottoms	Trichloroethene	C9J160264001	0.2	0.1	mg/L	U	0.2			Highland	2010
APW Tank Bottoms	Trichloroethene	C9K050460001	0.2	0.1	mg/L	U	0.2			Fresno	2010
APW Tank Bottoms	Trichloroethene	C0J110402002	0.2	0.1	mg/L	U	0.2			Sacramento	2010
APW Tank Bottoms	Trichloroethene	C0J150414001	0.2	0.1	mg/L	U	0.2			Highland	2010
APW Tank Bottoms	Trichloroethene	C0K050586001	0.2	0.1	mg/L	U	0.2			Fresno	2010
APW Tank Bottoms	Trichloroethene	180-15368-1	0.2	0.1	mg/L	U	0.2			Highland	2012
APW Tank Bottoms	Trichloroethene	180-11547-1	0.2	0.1	mg/L	U	0.2			Los Angeles	2012
APW Tank Bottoms	Trichloroethene	180-11254-1	0.2	0.1	mg/L	U	0.2			Santa Ana	2012
APW Tank Bottoms	Trichloroethene	180-9155-1	0.2	0.1	mg/L	U	0.2			El Monte	2012
APW Tank Bottoms	Trichloroethene	180-26073-1	0.2	0.1	mg/L	U	200			Highland	2013
APW Tank Bottoms	Trichloroethene	180-26876-1	0.2	0.1	mg/L	U	0.2			Fresno	2013
APW Tank Bottoms	Trichloroethene	180-30866-1	0.2	0.1	mg/L	U	0.2			Sacramento	2014
APW Tank Bottoms	Trichloroethene	180-38043-1	0.2	0.1	mg/L	U	0.2			Fresno	2014
APW Tank Bottoms	Trichloroethene	180-38676-1	0.2	0.1	mg/L	U	0.2			Highland	2014
APW Tank Bottoms	Trichloroethene	180-50275-1	0.1	0.1	mg/L	J	0.2			Los Angeles	2015
APW Tank Bottoms	Trichloroethene	180-58154-1	0.2	0.1	mg/L	U	0.2			Santa Ana	2016
APW Tank Bottoms	Trichloroethene	180-70385-1	0.2	0.1	mg/L	U	0.2			Los Angeles	2017
APW Tank Bottoms	Trichloroethene	180-80850-1	0.2	0.1	mg/L	U	0.2			Sacramento	2018
APW Tank Bottoms	Trichloroethene	C6I150307001	0.11	0.11	mg/L		0.05			El Monte	2006
APW Tank Bottoms	Trichloroethene	440-54550-1	0.4	0.2	mg/L	U	0.2	31	48	Los Angeles	2013
APW Tank Bottoms	Trichloroethene	180-5303-1	0.24	0.24	mg/L	H	0.2			Highland	2012
APW Tank Bottoms	Trichloroethene	C1D010430001	0.5	0.25	mg/L	U	0.5			El Monte	2011
APW Tank Bottoms	Trichloroethene	C8H150273001	0.3	0.3	mg/L		0.25			Los Angeles	2008
APW Tank Bottoms	Trichloroethene	C9H130286001	1	0.5	mg/L	U	1			Los Angeles	2009
APW Tank Bottoms	Trichloroethene	C0F220562001	0.5	0.5	mg/L		0.5			Los Angeles	2010
APW Tank Bottoms	Trichloroethene	C6C310223001	0.54	0.54	mg/L		0.05			Highland	2006
APW Tank Bottoms	Trichloroethene	C8G220112001	0.76	0.76	mg/L		0.2			Highland	2008
APW Tank Bottoms	Trichloroethene	180-4418-1	0.91	0.91	mg/L		0.2			Highland	2012
APW Tank Bottoms	Trichloroethene	C0F220561001	1	1	mg/L		0.5			El Monte	2010
APW Tank Bottoms	Trichloroethene	C6C150186001	1.3	1.3	mg/L		0.2			Oakland	2006
APW Tank Bottoms	Trichloroethene	C8L030200001	1.3	1.3	mg/L		0.2			Fresno	2008
APW Tank Bottoms	Trichloroethene	180-81780-1	1.3	1.3	mg/L		0.2			Los Angeles	2018
APW Tank Bottoms	Trichloroethene	C6L050260001	1.4	1.4	mg/L		0.2			Fresno	2006
APW Tank Bottoms	Trichloroethene	180-4700-1	1.8	1.8	mg/L		0.2			Fresno	2012
APW Tank Bottoms	Trichloroethene	C9H130284001	3.3	3.3	mg/L		1.2			El Monte	2009
APW Tank Bottoms	Trichloroethene	180-1932-1	7.9	7.9	mg/L		0.2			Los Angeles	2011
APW Tank Bottoms	Trichloroethene	180-50336-1	100	50	mg/L	U	100			Fresno	2015
APW Tank Bottoms	Vinyl Chloride	C6C310223001	0.05	0.025	mg/L	U	0.05			Highland	2006

MATRIX	PARAMETER	LAB ID	RESULT	RANKED DATA	UNITS	QUALIFIER	REPORTING LIMIT	Uth VALUE	COUNT	FACILITY	YEAR
APW Tank Bottoms	Vinyl Chloride	C6I150307001	0.05	0.025	mg/L	U	0.05			El Monte	2006
APW Tank Bottoms	Vinyl Chloride	C9G310286001	0.05	0.025	mg/L	U	0.05			El Monte	2009
APW Tank Bottoms	Vinyl Chloride	C8H150273001	0.1	0.05	mg/L	U	0.1			Los Angeles	2008
APW Tank Bottoms	Vinyl Chloride	C6C150186001	0.2	0.1	mg/L	U	0.2			Oakland	2006
APW Tank Bottoms	Vinyl Chloride	C6L050260001	0.2	0.1	mg/L	U	0.2			Fresno	2006
APW Tank Bottoms	Vinyl Chloride	C8A110289001	0.2	0.1	mg/L	U	0.2			Sacramento	2008
APW Tank Bottoms	Vinyl Chloride	C8E080389001	0.2	0.1	mg/L	U	0.2			El Monte	2008
APW Tank Bottoms	Vinyl Chloride	C8E080390001	0.2	0.1	mg/L	U	0.2			El Monte	2008
APW Tank Bottoms	Vinyl Chloride	C8G220112001	0.2	0.1	mg/L	U	0.2			Highland	2008
APW Tank Bottoms	Vinyl Chloride	C8L030200001	0.2	0.1	mg/L	U	0.2			Fresno	2008
APW Tank Bottoms	Vinyl Chloride	C9D010186001	0.2	0.1	mg/L	U	0.2			El Monte	2009
APW Tank Bottoms	Vinyl Chloride	C0C300517001	0.2	0.1	mg/L	U	0.2			El Monte	2010
APW Tank Bottoms	Vinyl Chloride	C9J160264001	0.2	0.1	mg/L	U	0.2			Highland	2010
APW Tank Bottoms	Vinyl Chloride	C9K050460001	0.2	0.1	mg/L	U	0.2			Fresno	2010
APW Tank Bottoms	Vinyl Chloride	C0J110402002	0.2	0.1	mg/L	U	0.2			Sacramento	2010
APW Tank Bottoms	Vinyl Chloride	C0J150414001	0.2	0.1	mg/L	U	0.2			Highland	2010
APW Tank Bottoms	Vinyl Chloride	C0K050586001	0.2	0.1	mg/L	U	0.2			Fresno	2010
APW Tank Bottoms	Vinyl Chloride	C1D010430001	0.2	0.1	mg/L	U	0.2			El Monte	2011
APW Tank Bottoms	Vinyl Chloride	180-1932-1	0.2	0.1	mg/L	U	0.2			Los Angeles	2011
APW Tank Bottoms	Vinyl Chloride	180-15368-1	0.2	0.1	mg/L	U	0.2			Highland	2012
APW Tank Bottoms	Vinyl Chloride	180-17242-1	0.2	0.1	mg/L	U	0.2			Fresno	2012
APW Tank Bottoms	Vinyl Chloride	180-11547-1	0.2	0.1	mg/L	U	0.2			Los Angeles	2012
APW Tank Bottoms	Vinyl Chloride	180-11254-1	0.2	0.1	mg/L	U	0.2			Santa Ana	2012
APW Tank Bottoms	Vinyl Chloride	180-4418-1	0.2	0.1	mg/L	U	0.2			Highland	2012
APW Tank Bottoms	Vinyl Chloride	180-5303-1	0.2	0.1	mg/L	U H	0.2			Highland	2012
APW Tank Bottoms	Vinyl Chloride	180-4700-1	0.2	0.1	mg/L	U	0.2			Fresno	2012
APW Tank Bottoms	Vinyl Chloride	180-9155-1	0.2	0.1	mg/L	U	0.2			El Monte	2012
APW Tank Bottoms	Vinyl Chloride	180-26073-1	0.2	0.1	mg/L	U	200			Highland	2013
APW Tank Bottoms	Vinyl Chloride	180-26876-1	0.2	0.1	mg/L	U	0.2			Fresno	2013
APW Tank Bottoms	Vinyl Chloride	180-30866-1	0.2	0.1	mg/L	U	0.2	31	48	Sacramento	2014
APW Tank Bottoms	Vinyl Chloride	180-38043-1	0.2	0.1	mg/L	U	0.2			Fresno	2014
APW Tank Bottoms	Vinyl Chloride	180-38676-1	0.2	0.1	mg/L	U	0.2			Highland	2014
APW Tank Bottoms	Vinyl Chloride	180-50275-1	0.2	0.1	mg/L	U	0.2			Los Angeles	2015
APW Tank Bottoms	Vinyl Chloride	180-58154-1	0.2	0.1	mg/L	U	0.2			Santa Ana	2016
APW Tank Bottoms	Vinyl chloride	180-70385-1	0.2	0.1	mg/L	U	0.2			Los Angeles	2017
APW Tank Bottoms	Vinyl chloride	180-67797-1	0.2	0.1	mg/L	U	0.2			Santa Ana	2017
APW Tank Bottoms	Vinyl chloride	180-60019-1	0.2	0.1	mg/L	U	0.2			Fresno	2017
APW Tank Bottoms	Vinyl chloride	180-61551-1	0.2	0.1	mg/L	U	0.2			Los Angeles	2017

MATRIX	PARAMETER	LAB ID	RESULT	RANKED DATA	UNITS	QUALIFIER	REPORTING LIMIT	Uth VALUE	COUNT	FACILITY	YEAR
APW Tank Bottoms	Vinyl chloride	180-81780-1	0.2	0.1	mg/L	U	0.2			Los Angeles	2018
APW Tank Bottoms	Vinyl chloride	180-80850-1	0.2	0.1	mg/L	U	0.2			Sacramento	2018
APW Tank Bottoms	Vinyl chloride	180-78622-1	0.2	0.1	mg/L	U	0.2			Santa Ana	2018
APW Tank Bottoms	Vinyl Chloride	C0F220561001	0.5	0.25	mg/L	U	0.5			El Monte	2010
APW Tank Bottoms	Vinyl Chloride	C0F220562001	0.5	0.25	mg/L	U	0.5			Los Angeles	2010
APW Tank Bottoms	Vinyl Chloride	C9H130286001	1	0.5	mg/L	U	1			Los Angeles	2009
APW Tank Bottoms	Vinyl Chloride	440-54550-1	1	0.5	mg/L	U	0.2			Los Angeles	2013
APW Tank Bottoms	Vinyl Chloride	C9H130284001	1.2	0.6	mg/L	U	1.2			El Monte	2009
APW Tank Bottoms	Vinyl Chloride	180-50336-1	100	50	mg/L	U	100			Fresno	2015

APPENDIX III-5

AR Sampling Guidelines

Annual Re-characterization Sampling Instructions

Good sampling practices are critical to the success of the Annual Re-characterization program. Please take your time when pulling samples, ensuring that all of the following requirements are fulfilled.

Training Requirements and Supporting Documentation

✓SAFETYFIRST!

- ✓ Personal Protective Equipment (PPE) – Follow requirements in attached PPE Matrix
- ✓ Prior to shipping samples by FedEx Air, you must complete the following:
  - IATA Dangerous Goods Regulations Training.
  - Sample shipping requirements are outlined in BOG O310-005 (US) and OC310-005/OC310-005 FC (Canada) and Clean Harbors TC 8.0 Handling, Packaging, and Transporting Samples policy

Supply Checklist

NOTE: To minimize opportunity for contamination, all AR sampling supplies are to be stored in facility office building until needed for actual sampling.

- ✓ Disposable COLIWASA (SK P/N 8941)
- ✓ Disposable plastic scoop
- ✓ Disposable plastic bucket if composite required (e.g., 6 gallon SK P/N 706)
- ✓ Sample Kits
  - SK P/N 3419 **–** Required for all dry cleaning related materials
  - SK P/N 82170 **–** Required for all other samples
- ✓ Housekeeping Supplies
  - PIG® Universal Heavy-Weight Mat
  - PIG® Heavy-Duty Maintenance Wipes
  - Plastic garbage bags
- ✓ Non sparking tools
- ✓ Grounding and bonding equipment
- ✓ Paperwork and Packaging Supplies
  - Chain of Custody form
  - Pen and Sharpie Marker
  - Packaging Tape

Pre-sampling Preparation

- ✓ Time – allow 15 minutes per sample
- ✓ **IMPORTANT** - Make arrangements with warehouse workers/material handlers to set aside containers from different customers. Each container sampled must be from a different customer.
- ✓ Place sample kit freezer packs in the freezer 24 hrs prior to sampling event.
- ✓ Purchase bags of ice to supplement the freezer packs if shipping samples in warmer weather
- ✓ Fill out Chain of Custody (COC) forms completely

How to fill out the Chain of Custody (COC) Form

1. Complete all fields in the COLLECTION INFORMATION section

2. **IMPORTANT** - Both the Customer Name(s) and Customer Number(s) associated with the container(s) being sampled must be documented on the COC.

   In the event the analytical report shows atypical waste codes, we'll be able to track the sample back to the generator to discuss their specific process and possible source for contamination. Decision will need to be made regarding whether or not the generator's waste should remain as CORE, or is better handled through CWS.

3. A unique identification number must be assigned to each sample using the format ***AR_YEAR_PeopleSoft Plant ID_Sample Matrix*** (e.g., AR_2015_CAZ_DC Perc Bottoms, AR2015_CAZ_Premium Solvent, etc.).

4. The same number must be written on the associated sample jar label so that the lab can match-up paperwork with samples upon receipt.

5. The sample collector must sign the RELINQUISHED BY section and enter the date and time of shipment.

6. Enter the air bill number on the COC form and make a copy of the form for your records.

Sampling

The majority of facilities' WAPs require "grab samples". A select few, however, require composite samples. See section below on how to obtain a composite sample.

The following table summarizes how samples are typically taken. Keep in mind, the waste streams required for sampling are permit specific (i.e., not every facility will be required to sample every stream outlined in the below table).

1. Sampling Methods/Practices to be used
   - ASTM D5495 - *Standard Practice for Sampling with a Composite Liquid Waste Sampler (COLIWASA)*
   - ASTM D5633 - *Standard Practice for Sampling with a Scoop*

Sample Type	Sampling Location	Sample Size/Kit	Homogenization Technique	Sampling Device
Aqueous Brake Cleaner	5 gallon poly carboy	1 quart TCLP kit	Grab sample using multiple COLIWASA pulls or pour contents into a new bucket Stir/mix contents before sampling.	COLIWASA
Dry Cleaner Naphtha/PERC Bottoms/Filters	Drum	1 quart DOT SP-9168 Exemption Packaging	Grab sample Stir/mix content of drum with COLIWASA before sampling	COLIWASA or Scoop
Immersion Cleaner	Drum	1 quart TCLP kit	Grab sample Stir/mix content of drum with COLIWASA before sampling	COLIWASA
Paint Gun Cleaner Paint Waste	Drum	1 quart TCLP kit	Grab sample Stir/mix content of drum with COLIWASA before sampling	COLIWASA
Parts Washer Solvent Bulk Tank	Tank	1 quart TCLP kit	Grab sample	Tank valve or from tanker using a COLIWASA during annual draw down
Dumpster Sludge (APW and PWS)	Return and Fill	1 quart TCLP kit	Grab sample Stir/mix up Return and Fill bottoms with scoop before sampling	Scoop
Sample Type	Sampling Location	Sample Size/Kit	Homogenization Technique	Sampling Device
Tank Bottoms (APW and PWS)	Tank	1 quart TCLP kit	Grab sample during tank clean out Stir/mix up tank bottoms with scoop before sampling	Scoop
PWS 105	Drum	1 quart TCLP kit	Grab sample Stir/mix content of drum with COLIWASA before sampling	COLIWASA
PWS Premium	Drum	1 quart TCLP kit	Grab sample Stir/mix content of drum with COLIWASA before sampling	COLIWASA
APW	Drum	1 quart TCLP kit	Grab sample Stir/mix content of drum with COLIWASA before sampling	COLIWASA
Antifreeze	Drum	1 quart TCLP kit	Grab sample Stir/mix content of drum with COLIWASA before sampling	COLIWASA
Used Oil	Drum	1 quart TCLP kit	Grab sample Stir/mix content of drum with COLIWASA before sampling	COLIWASA

Revised 9/17/2019
Rick Haskins

1. Bring all items in the *Equipment Checklist*, including frozen sample kit freezer packs/ice, with you to the sampling location.
2. Wear required PPE
3. Fill out sample label completely and apply to the side of both sample jars in the kit

EXAMPLE SAMPLE LABEL

SAMPLE ID:
DATE SAMPLE PULLED:
TIME SAMPLE PULLED:
FACILITY ID:
NAME OF SAMPLER:

4. Obtain a representative sample using a disposable plastic scoop or disposable COLIWASA

   IMPORTANT – A new scoop or COLIWASA must be used for each sample pulled

5. **IMPORTANT** - Fill both sample jars **completely** so there is no headspace in the jar
6. Place all sampling debris in plastic garbage bag(s) and dispose of as Branch Generated Debris
7. Ensure the sample jar lid is tight. Seal the lid to the jar by wrapping with packaging tape.
8. Attach *Custody Seal* across the lid of the jar in such a way that the seal must be broken to open the jar. The *Custody Seal* must be signed by the sampler.
9. Place the sample jar(s) into a "Samples Only" refrigerator until ready to ship.
10. When ready to ship, place the quart sample jar into the TCLP kit with **frozen freezer packs**. Use additional bagged ice if shipping during warm temperatures. Close up the Styrofoam cooler and place the COC paperwork on top before sealing up the cardboard shipping box using shipping tape.

IMPORTANT - Ship samples Monday thru Wednesday via *FedEx Priority Overnight* to ensure they arrive Thursday or Friday when lab personnel are available to unpack and place in a refrigerator.

TestAmerica Laboratory
Attention: Debra Bowen (412.963.2445)
301 Alpha Drive, RIDC Park
Pittsburgh, PA 15238

Holding Times and Preservation Requirements

IMPORTANT – Sample(s) must arrive cold and lab must perform TCLP extraction within 14 calendar days from the date and time you pulled the sample. If sample arrives warm or lab is unable to perform TCLP extraction within 14 days of the date and time you pulled the sample, you will be notified to resample.

SAMPLE MAXIMUM HOLDING TIMES [DAYS]				
	From: Field collection To: TCLP extraction	From: TCLP extraction To: Preparative extraction	From: Preparative extraction To: Determinative analysis	Total elapsed time
Volatiles	14	NA	14	28
Semi-volatiles	14	7	40	61
Mercury	28	NA	28	56
Metals, except mercury	180	NA	180	360

NA = Not applicable

Sampling using a COLIWASA

- Ensure the COLIWASA is functioning properly before use. Confirm that the stopper is securely attached to the plastic rod and provides a good seal when in the closed position.
- **OPEN** the COLIWASA and **SLOWLY** lower into the container until it touches the bottom. The COLIWASA must not be lowered with the stopper in the closed position. Opening the stopper after the tube is submerged will cause material to flow in from the bottom layer only, resulting in gross over-representation of that layer. If lowered too fast, a non-representative sample will result.
- When the COLIWASA touches the bottom of the container, pull up on the stopper mechanism to close the COLIWASA.
- Slowly withdraw the COLIWASA from the container while wiping the outside of the COLIWASA with a disposable wipe.
- Place the end of the COLIWASA into the 32-oz sample jar and discharge contents by slowly opening the stopper mechanism.

Obtaining a Composite Sample (Only those branches that require a composite per permit)

- Use a new disposable plastic bucket
- Use a new COLIWASA for each customer container sampled
- For each customer container sampled, you'll actually need to pull the following two samples
    - Place one COLIWASA volume into the compositing bucket
    - Using the same COLIWASA, fill a new quart glass jar (SK P/N 8895). This sample jar needs to be labeled with the customer name and number associated with the container that is being sampled. This sample will serve as a retain in the event analytical on the composite shows atypical results and we need to analyze all associated customer samples. These retains need to be stored until analytical on the composite sample is reported.
- After sampling all customer containers, mix the contents of the bucket.
- Use a COLIWASA to pull a sample of the mixture from the bucket and submit this sample to TestAmerica following instructions above.

APPENDIX

TEN-E Packaging Services, Inc.

UNITED NATIONS / DOT PERFORMANCE CERTIFICATION

DANGEROUS GOODS A DIVISION OF BERLIN PACKAGING

4G DESIGN QUALIFICATION

HMS-68740: 1 x 32 oz. Round Flint Glass Bottle with EPS Cooler and Ice Packs

TEST REPORT #: 18-MN20036

(un) 4G / Y5.5 / S / **
USA / +AA4224

**Insert the year packaging is manufactured

TESTING PERFORMED FOR:

BERLIN PACKAGING
1195 Washington Pike
Bridgeville, PA 15017-2854

ATTN: Daniel Jiang

TESTING PERFORMED BY:

TEN-E PACKAGING SERVICES, INC.
1666 County Road 74
Newport, MN 55055
Phone: 651-459-0671
Fax: 651-459-1430

March 5, 2018

This test report shall not be reproduced, except in full and unedited, without prior written approval from TEN-E Packaging Services, Inc.

TABLE OF CONTENTS

SECTION I: CERTIFICATION **3**
SECTIONS II & V: PACKAGING DESCRIPTIONS / COMPONENT DRAWINGS **4**
COMPONENT INFORMATION 5
SECTION III: TEST PROCEDURES AND RESULTS **10**
DROP TESTS 10
STACKING TEST 11
VIBRATION TEST 12
COBB WATER ABSORPTION TEST 13
REGULATORY AND INDUSTRY STANDARD REFERENCES **14**
SECTION IV: MATHEMATICAL CALCULATIONS **15**
APPENDIX A: MANUFACTURER'S CLOSURE INSTRUCTIONS **17**

NOTES AND COMMENTS

Testing of this design covers the following Berlin Packaging kits:

1. HMS-68740 **2. HMS-68740R**

Berlin Packaging has documentation on file for all inner packagings successfully meeting the pressure differential requirements for air transportation. The end user is responsible for confirming with Berlin Packaging or may elect to conduct their own pressure test to document the inner packagings they are using are capable of meeting the applicable regulatory requirements.

This report is being issued as a design qualification due to the change in shipper basis weight specification from the most recent design qualification report (16-MN20161). This design will retain the +AA4224 certification.

This test report shall not be reproduced, except in full and unedited, without prior written approval from TEN-E Packaging Services, Inc.

SECTION I: CERTIFICATION

Design Qualification of the Berlin Packaging
HMS-68740: 1 x 32 oz. Round Flint Glass Bottle with EPS Cooler and Ice Packs

TEN-E Packaging Services, Inc. is a current DOT UN Third-Party Certification Agency under §107.403 and certifies that the **Berlin Packaging** design referenced above has passed the standards of the DEPARTMENT OF TRANSPORTATION'S TITLE 49 CFR; Performance Oriented Packaging Standards, Section 178. This package is also certified under IMDG, ICAO/IATA Regulations and the UN Recommendations on the Transport of Dangerous Goods. It is the responsibility of the end user to determine authorization for use under these regulations. The use of other packaging methods or components other than those documented in this report may render this certification invalid.

SUMMARY OF PERFORMANCE TESTS

UN / DOT TEST	CFR REFERENCE	TEST LEVEL	TEST CONTENTS	TEST COMPLETED	TEST RESULTS
Drop	178.603	1.5 m	Water	March 1, 2018	PASS
Stacking	178.606	49.9 Kg – 24 Hours	Water	March 5, 2018	PASS
Pressure	173.27	28 inHg - 5 Minutes	Refer to note on page 2		PASS
Vibration	178.608	4.0 Hz – 1 Hour	Water	March 2, 2018	PASS
Cobb	178.516	30 Minutes	---	February 28, 2018	PASS

TEST REPORT NUMBER:	18-MN20036
UN MARKING: **(CFR 49 – 178.503)**	(un) 4G / Y5.5 / S / ** USA / +AA4224
PACKAGING IDENTIFICATION CODE:	4G - Fiberboard Box (178.516)
PERFORMANCE STANDARD:	Y (Packaging meets Packing Group II and III tests)
AUTHORIZED GROSS MASS:	5.5 Kg (12.1 Lbs.)
"S" DESIGNATION:	Denotes Inner Packagings
YEAR OF MANUFACTURE:	** Insert year the packaging is manufactured
STATE AUTHORIZING THE MARK:	USA
PACKAGING CERTIFICATION AGENCY:	(+AA) TEN-E Packaging Services, Inc. (Newport, MN CAA #2006030022)
THIRD PARTY PACKAGING IDENTIFICATION:	+AA4224
PERIODIC RETEST DATE:	March 5, 2020

ALL OTHER WARRANTIES, EXPRESSED OR IMPLIED, INCLUDING ANY WARRANTY THAT THE PACKAGING TESTED IS MERCHANTABLE OR FIT FOR A PARTICULAR PURPOSE, ARE DISCLAIMED. In no event shall TEN-E Packaging Services, Inc. liability exceed the total amount paid by **Berlin Packaging** for services rendered. In the event of future changes to the above referenced test standards, it is the responsibility of **Berlin Packaging** to determine whether additional testing or updating of past testing is necessary to verify that the packaging we have tested remains in compliance with those standards.

MANUFACTURER:
Berlin Packaging
1195 Washington Pike
Bridgeville, PA 15017-2854

Steve M. Brion
Project Manager
TEN-E Packaging Services, Inc.
1666 County Road 74
Newport, MN 55055

This test report shall not be reproduced, except in full and unedited, without prior written approval from TEN-E Packaging Services, Inc.

SECTIONS II & V: PACKAGING DESCRIPTIONS / COMPONENT DRAWINGS

HMS-68740: 1 x 32 oz. Round Flint Glass Bottle with EPS Cooler and Ice Packs

ASSEMBLY DRAWING

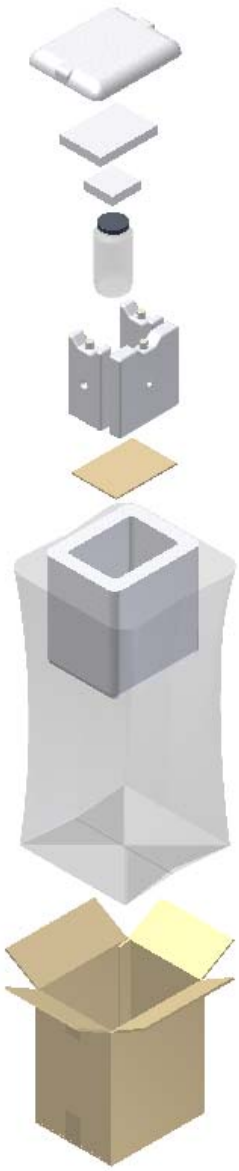

TEST LEVELS		
Certification Type:	Design Qualification	
Packaging Code Designation:	4G	
Packing Group:	II	
Specific Gravity:	1.5	
Internal Pressure:	28 inHg	
TEST SAMPLE PREPARATION (Refer to Section IV)		
Overall Packaging Tare Weight:	4,067.0 Grams	
Fill Capacity (98% Maximum Capacity):		
Water	956.5 Grams	
Package Test Weight:		
Water	5.0 Kg	11.0 Lbs.
Authorized Package Gross Mass:	5.5 Kg	12.1 Lbs.
CLOSING METHODS – INNER PACKAGING		
70 mm Phenolic Closure:		
Application Torque:	40 In-Lbs.	
Equipment:	Torque Meter #714	
Plastic Bag:	Not used in Testing	
CLOSING METHODS – SHIPPER		
Top Flaps:		
Manufacturer:	3M, St. Paul, MN	
Type:	3M #375 Pressure Sensitive Tape	
Width:	48 mm (2")	
Overlap:	2" Minimum	
Tape Pattern:	Center Seam	
Inner Flaps:	2” Width Gap	
Outer Flaps:	Meet	
Bottom Flaps:		
Manufacturer:	3M, St. Paul, MN	
Type:	3M #375 Pressure Sensitive Tape	
Width:	48 mm (2")	
Overlap:	2" Minimum	
Tape Pattern:	Center Seam	
Inner Flaps:	2” Width Gap	
Outer Flaps:	Meet	
Refer to Appendix A for Manufacturer’s Closure Instructions		

For Packagings with an Established Gross Mass:

If the gross mass calculation in this report exceeds the previously established gross mass, the manufacturer may elect to maintain the current gross mass marking (e.g. the gross mass rating of the UN marking on the packaging may be less than the calculated gross mass indicated in this report) or use the newly established gross mass. In no event shall the gross mass marking on the packaging exceed the gross mass to which the packaging was tested.

This test report shall not be reproduced, except in full and unedited, without prior written approval from TEN-E Packaging Services, Inc.

COMPONENT INFORMATION

CLOSURE (CAP-00310) (CAP-CXXAA11PRFTBL9) (5215A)	
Manufacturer: National Novelty, Lancaster, PA	
Description:	70 mm Plain Threaded Closure
Quantity:	1
Material:	Phenolic, Black
Tare Weight:	16.625 Grams
Overall Dimensions:	
• **Height**	0.463”
• **Diameter**	2.851”
Thread:	
• **Type**	70 mm
• **Style**	400
Thread Dimensions:	
• **T**	2.753”
• **E**	2.658”
Markings (QC Audit):	A JC-70-88 LEF-A 48
Liner	
Description:	F-217 PE Foam / Teflon Liner
Tare Weight:	3.019 Grams
Thickness:	0.058”
Diameter:	2.633”
GLASS BOTTLE (261438)	
Manufacturer: Arkansas Glass, Jonesboro, AR	
Description:	32 oz. Round Wide Mouth Glass Bottle
Quantity:	1
Material:	Glass, Flint
Coating:	None
Method of Manufacture:	Extrusion Blown
Tare Weight:	376 Grams
Capacity:	
• **Rated**	950 mL (32 oz.)
• **Overflow**	976 Grams (32.99 oz.)
Overall Dimensions:	
• **Height**	6.969”
• **Diameter**	3.702”
Thread Dimensions:	
• **T**	2.713”
• **E**	2.615”
Wall Thickness:	
• **Minimum**	0.063”
Markings (QC Audit):	A-32-5 AGC 10

DRAWING

This test report shall not be reproduced, except in full and unedited, without prior written approval from TEN-E Packaging Services, Inc.

LARGE TOP PAD (HMS-8187A)		DRAWING
Manufacturer: Interstate Paper Supply Company, Inc., Roscoe, PA		
Description:	Large Polylam Foam Top Pad	
Quantity:	1	
Material:	Polylam Foam	
Tare Weight:	24 Grams	
Overall Dimensions:		
• **Length**	7”	
• **Width**	5”	
• **Height**	1.5”	
Markings (QC Audit):	None	
SMALL TOP PAD (HMS-81874)		
Manufacturer: Interstate Paper Supply Company, Inc., Roscoe, PA		
Description:	Small Polylam Foam Top Pad	
Quantity:	1	
Material:	Polylam Foam	
Tare Weight:	9 Grams	
Overall Dimensions:		
• **Length**	3.5”	
• **Width**	3.5”	
• **Height**	1.5”	
Markings (QC Audit):	None	
BOTTOM PAD (COR-HC1968742)		
Manufacturer: PCA, Cheswick, PA		
Description:	Corrugated Bottom Pad Placed Under Bottle Inside Cooler	
Quantity:	1	
Material/Flute:	125 Lb. Test Single-Wall Natural Kraft Corrugated Fiberboard, C-Flute	
Basis Weight (Outer to Inner) Lbs./MSF:		
• **Measured**	50.9 / 24.0 / 51.7	
Combined Wt. of Facings:	102.6	
Tare Weight:	17 Grams	
Overall Dimensions (Blank):		
• **Length**	7-1/2”	
• **Width**	5-1/2”	
Markings (QC Audit):	None	

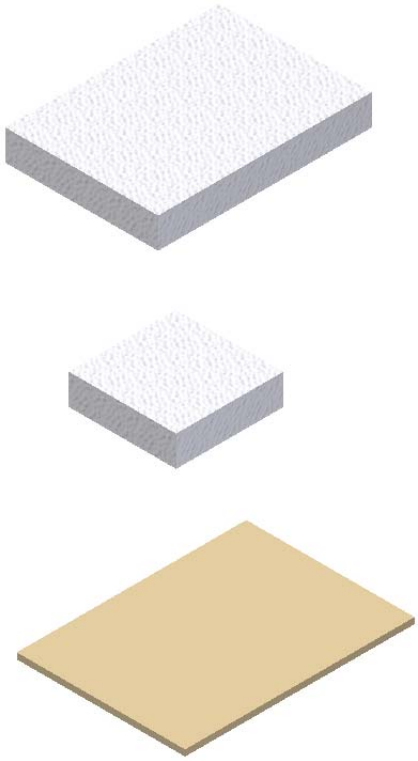

This test report shall not be reproduced, except in full and unedited, without prior written approval from TEN-E Packaging Services, Inc.

SMALL ICE PACK (HMS-86875)		DRAWING
Manufacturer: Cold Chain Technologies Inc., Holliston, MA		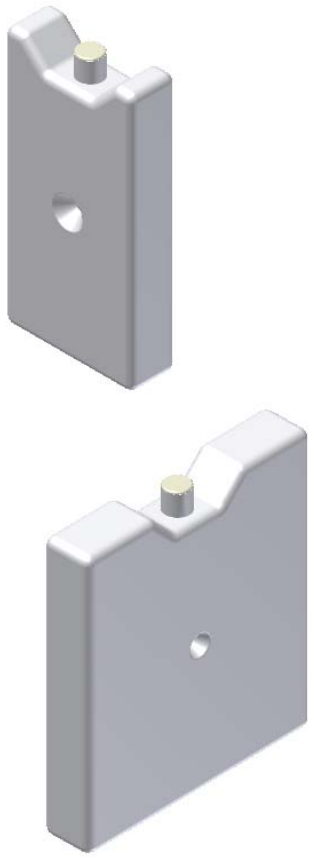
Description:	Small Ice Packs to Surround Bottle Inside Cooler	
Quantity:	2	
Material:	Polyethylene, White	
Tare Weight:	703 Grams (each)	
Overall Dimensions:		
• **Length**	4-1/4”	
• **Width**	1-1/2”	
• **Height**	9”	
Markings (QC Audit):	None	
LARGE ICE PACK (HMS-8687A)		
Manufacturer: Cold Chain Technologies Inc., Holliston, MA		
Description:	Large Ice Pack to Surround Bottle Inside Cooler	
Quantity:	1	
Material:	Polyethylene, White	
Gross Weight:	1,600 Grams	
Overall Dimensions:		
• **Length**	7”	
• **Width**	1-1/2”	
• **Height**	9”	
Markings (QC Audit):	None	

This test report shall not be reproduced, except in full and unedited, without prior written approval from TEN-E Packaging Services, Inc.

2-PIECE FOAM COOLER (HMS-86911)		DRAWING
Manufacturer: Plymouth Foam Inc., Gnadenhutten, OH		
Description:	Expanded Polystyrene 2-Piece Cooler (TK-9)	
Quantity:	1 (2-Piece)	
Material:	Expanded Polystyrene	
Tare Weight:		
• **Top**	33 Grams	
• **Bottom**	196 Grams	
Overall Dimensions:		
• **Top**	**Inner:** 7-7/8” x 6” x 0.405” **Outer:** 10-5/8” x 9” x 0.992”	
• **Bottom**	10-5/8” x 9” x 12-3/8”	
• **Overall**	10-5/8” x 9” x 13-1/2”	
Markings (QC Audit):		
• **Top**	None	
• **Bottom**	None	
PLASTIC BAG (HMS-8113A)		
Manufacturer: Alpine Packaging, North Versailles, PA		
Description:	Gusseted LDPE Liner Bag (not used in testing)	
Quantity:	1	
Material:	Low Density Polyethylene, Clear	
Thickness:	2 Mil	
Tare Weight:	37 Grams	
Overall Dimensions:		
• **Length**	29”	
• **Width**	12”	
• **Side Gusset Width**	9”	
Sealing Method:		
• **Top**	5-3/4” Nylon Cable Tie (HMS-8133A)	
• **Bottom**	Heat Sealed	
Markings (QC Audit):	None	

This test report shall not be reproduced, except in full and unedited, without prior written approval from TEN-E Packaging Services, Inc.

SHIPPER (COR-H21987402)		
Manufacturer: PCA, Cheswick, PA		
Description:	Regular Slotted Container	
Material/Flute (Inner to Outer):	200 Lb. Test Single Wall Natural Kraft Corrugated Fiberboard, C-Flute	
Basis Weight (Outer to Inner) Lbs./MSF:		
• **Specification**	42 / 23M / 42	
Combined Wt. of Facings:	84.0	
Tare Weight:	349 Grams	
DIMENSIONS		
	Specification Dimensions (Inside)	**Measured Dimensions (Outside)**
• **Length**	11”	11-1/8”
• **Width**	9”	9-1/4”
• **Height**	13-1/2”	14-1/4”
Board Caliper (Nominal):	0.1610”	
Manufacturer’s Joint:	Inside Glued, 1-3/8” Lap	
Markings (QC Audit):	None	

This test report shall not be reproduced, except in full and unedited, without prior written approval from TEN-E Packaging Services, Inc.

SECTION III: TEST PROCEDURES AND RESULTS

DROP TESTS

TEST INFORMATION		TEST CRITERIA
TEST CONTENTS:	Water	• For packaging containing liquid, each packaging does not leak. • There can be no damage to the outer packaging likely to adversely affect safety during transport. Inner receptacles, inner packagings or articles must remain completely within the outer packaging and there must be no leakage of the filling substance from the inner packaging. • Any discharge from a closure is slight and ceases immediately after impact with no further leakage. (§178.603)
SAMPLE PREPARATION:	Refer to Section II	
CONDITIONING:	73°F / 50% RH Chamber #215	
DROP HEIGHT:	1.5 Meters (60.0”) (Refer to Section IV)	
TEST EQUIPMENT:	L.A.B. Accu Drop 160	

DROP ORIENTATIONS AND TEST RESULTS

Sample #1: Flat on Bottom	Sample #2: Flat on Top	*Sample #3: Flat on Long Side
PASS: No leakage or damage.	**PASS:** Slight spurt on impact, but not continuous. No damage.	**PASS:** No leakage or damage.
***Sample #4: Flat on Short Side**	***Sample #5: Bottom Corner**	****Sample #1: Top Corner**
PASS: No leakage or damage.	**PASS:** No leakage. Slight deformation at impact corner.	**PASS:** No leakage. Slight deformation at impact corner.

*Side and corner drops were conducted to impact at the manufacturer’s joint.
**Flat on bottom drop sample was also used for the top corner drop

This test report shall not be reproduced, except in full and unedited, without prior written approval from TEN-E Packaging Services, Inc.

STACKING TEST

TEST INFORMATION		TEST CRITERIA
TEST CONTENTS:	Water	• There must be no leakage of the filling substance from the inner receptacle, or inner packaging. • There can be no deterioration that could adversely affect transport safety or any distortion liable to reduce the package's strength, cause instability in stacks of packages, or cause damage to inner packagings that is likely to reduce safety in transport. (§178.606)
SAMPLE PREPARATION:	Refer to Section II	
CONDITIONING:	73°F / 50% RH Chamber #215	
TEST LOAD APPLIED:	49.9 Kg (110.0 Lbs.) (Refer to Section IV)	
TEST DURATION:	24 Hours	
TEST EQUIPMENT:	Dead Load Weights	

STACKING TEST SET-UP & RESULTS

Sample #	Maximum Deflection After 24 Hours	Results
6	7/16"	**PASS**
7	7/16"	**PASS**
8	7/16"	**PASS**

Comments/Observations: Following the 24-hour stack test, there was no leakage of contents from the test samples and no damage likely to affect the performance of the packaging.

Stacking Stability: Not conducted; required only for guided load tests.

This test report shall not be reproduced, except in full and unedited, without prior written approval from TEN-E Packaging Services, Inc.

VIBRATION TEST

TEST INFORMATION		TEST CRITERIA
TEST CONTENTS:	Water	• Immediately following the period of vibration, each package must be removed from the platform, turned on its side and observed for any evidence of leakage. • A packaging passes the vibration test if there is no rupture or leakage from any of the packages. • No test sample should show any deterioration which could adversely affect transportation safety or any distortion liable to reduce packaging strength. (§178.608)
SAMPLE PREPARATION:	Refer to Section II	
CONDITIONING:	73°F / 50% RH Chamber #215	
TABLE DISPLACEMENT:	1”	
TEST FREQUENCY:	4.0 Hz	
TEST DURATION:	1 Hour	
TEST EQUIPMENT:	Vertical motion using L.A.B. 6000 Transportation Simulator	

VIBRATION TEST SET-UP AND RESULTS

Sample #	Results	Comments/Observations
6	PASS	No leakage or damage.
7	PASS	
8	PASS	

This test report shall not be reproduced, except in full and unedited, without prior written approval from TEN-E Packaging Services, Inc.

COBB WATER ABSORPTION TEST

TEST INFORMATION		TEST CRITERIA
NUMBER OF SAMPLES:	5	• An increase in mass greater than 155 g/m² over the 30 minute duration represents an unacceptable level of water resistance. (§178.516)
SAMPLE SIZE:	5” x 5” (Minimum)	
CONDITIONING:	73ºF / 50% RH Chamber #215	
WATER APPLIED:	100 mL / Sample	
TEST DURATION:	30 Minutes / Sample	
TEST EQUIPMENT:	Precisa 100A-300M Analytical Balance Gurley Cobb Water Absorption Fixtures	

COBB WATER ABSORPTION TEST RESULTS	
Sample #	**Water Absorbed**
1	135.1 g/m²
2	136.1 g/m²
3	134.0 g/m²
4	144.1 g/m²
5	141.0 g/m²
AVERAGE:	**138.1 g/m²**
RESULT	**PASS**

This test report shall not be reproduced, except in full and unedited, without prior written approval from TEN-E Packaging Services, Inc.

REGULATORY AND INDUSTRY STANDARD REFERENCES

REGULATORY REFERENCES					
TEST	**49 CFR①**	**UN②**	**IMDG③**	**ICAO④**	**IATA⑤**
	October 2017 Edition	**20th Edition**	**2016 Edition**	**2017-2018 Edition**	**59th Edition**
Drop:	178.603	6.1.5.3	6.1.5.3	6; 4.3	6.3.3
Stacking:	178.606	6.1.5.6	6.1.5.6	6; 4.6	6.3.6
Pressure:	173.27(c)	4.1.1.4.1	---	4; 1.1.6	5.0.2.9
Vibration:	178.608	---	---	4; 1.1.1	5.0.2.7
Cobb:	178.516(b)(1)	6.1.4.12.1	6.1.4.12.1	6; 3.1.11.1	6.2.12.2

① United States Department of Transportation Code of Federal Regulations (CFR) Title 49, Transportation, Parts 100-185
② The United Nations Recommendations on the Transport of Dangerous Goods – Model Regulations (UN – Orange Book)
③ International Maritime Dangerous Goods Code (IMDG)
④ Technical Instructions for the Safe Transport of Dangerous Good by Air (ICAO)
⑤ International Air Transport Association (IATA) Dangerous Goods Regulations

INDUSTRY STANDARD REFERENCES		
Drop:	ASTM⑥ D5276:	Standard Test Method for Drop Test of Loaded Containers by Free Fall
	ISO⑦ 2248:	Packaging – Complete, Filled Transport Packages – Vertical Impact Test by Dropping
Stacking:	ASTM⑥ D4577:	Standard Test Method for Compression Resistance of a Container Under Constant Load
	ISO⑦ 2234:	Packaging – Complete, Filled Transport Packages – Stacking Test using Static Load
Hydrostatic Pressure:	ASTM⑥ D7660:	Standard Guide for Conducting Internal Pressure Tests on United Nations (UN) Packagings
Vibration:	ASTM⑥ D999:	Standard Test Method for Vibration Testing of Shipping Containers
	ISO⑦ 2247:	Packaging – Complete, Filled Transport Packages – Vibration Test at Fixed Low Frequency
Cobb:	ISO⑦ 535:	Paper and Board – Determination of Water Absorption – Cobb Method

⑥ American Society for Testing and Materials (ASTM)
⑦ International Organization for Standardization (ISO)

EQUIPMENT

All inspection, measuring and test equipment that can affect product quality is calibrated and adjusted at prescribed intervals, or prior to use, and is traceable to NIST, using ANSI Z540 as an overall guide for calibration certification.

This test report shall not be reproduced, except in full and unedited, without prior written approval from TEN-E Packaging Services, Inc.

SECTION IV: MATHEMATICAL CALCULATIONS

INFORMATION USED FOR CALCULATIONS

Overall Packaging Tare Weight (PTW):	4,067.0	Grams
Overflow Capacity (OFC):		
Water:	976.0	Grams
Number of Inner Packagings (# IP):	1	
Packing Group:	II	
Product Specific Gravity (PSG):	1.500	
Packing Group Multiplication Factor (MF):	1.00	
Overall Height of one Package (OH):	14.25	Inches
Stack Test-# of Samples Tested Simultaneously:	0	

98% OF OVERFLOW

Overflow Capacity (OFC) x 98%

OFC	x	98%			
976	x	98% =	956.5	Grams	Water

PACKAGE TEST WEIGHTS

Overall Pkg Tare Weight (PTW) + (98% Overflow Capacity (OFC) x # of Inner Pkg (# IP)

PTW	+	(98% OFC	x	# IP)	
4,067.0	+	956.5	x	1	Water
Water:		5.0	Kg	11.0	Lbs.

AUTHORIZED PACKAGE GROSS MASS CALCULATION (APGM)

Overall Pkg Tare Weight (PTW) + (Product SG (PSG) x 98% Overflow (OFC) x # of Inner Pkg (# IP))

PTW	+	(PSG	x	98% OFC	x	# IP)
4,067.0	+	1.5	x	956.5	x	1
		5.5	Kg	12.1	Lbs.	

This test report shall not be reproduced, except in full and unedited, without prior written approval from TEN-E Packaging Services, Inc.

DROP HEIGHT

Calculation For Product Specific Gravities Exceeding 1.2
Product Specific Gravity (PSG) x Packing Group Multiplication Factor (MF)

Packing Group: II

PSG	x	MF		Required Drop Height	Actual Drop Height
1.5	x	1.00			
		1.50	Meter	59.1 Inches	60 Inches

STACKING TEST MINIMUM LOAD CALCULATIONS

Number of Packages in a 3m High Stack (118 / Overall Pkg Height (OH) -1)

118 / Overall Height of one Pkg (OH) - 1

(118	/	OH)	-1	=	# 3m HS
118	/	14.25	-1	=	7.3

Stacking Test Load Calculation (Individual Package)

Authorized Pkg Gross Mass (APGM) x # of Pkg in a 3m High Stack (# 3m HS)

APGM	x	# 3m HS
5.5	x	7.3

40.2 Kg 88.6 Lbs.

This test report shall not be reproduced, except in full and unedited, without prior written approval from TEN-E Packaging Services, Inc.

APPENDIX A: MANUFACTURER'S CLOSURE INSTRUCTIONS

DANGEROUS GOODS A DIVISION OF BERLIN PACKAGING

Catalog # HMS-68740

1 x 32 oz. Glass Bottle with EPS Cooler with Ice Packs

Regulatory Information

UN Mark: 4G/Y5.5/S/**/USA/+AA4224

This package was tested to:

Packing Group:	Packing Group II		
Gross Mass:	5.5 Kg (12.1 Lbs.) Maximum Gross Mass		
Specific Gravity:	1.5		
Bottle Tested:	32 oz. Round Flint Glass Bottle		
Closure Tested:	70-400 Phenolic Closure		
Closure Torque:	40 In-Lbs.		
Closing Methods:	Top Flaps:	2" 3M #375 Pressure Sensitive Tape	
		Overlap:	2" Minimum
		Tape Pattern:	Center Seam
	Bottom Flaps:	2" 3M #375 Pressure Sensitive Tape	
		Overlap:	2" Minimum
		Tape Pattern:	Center Seam

Kits also covered under this test:

HMS-68740R

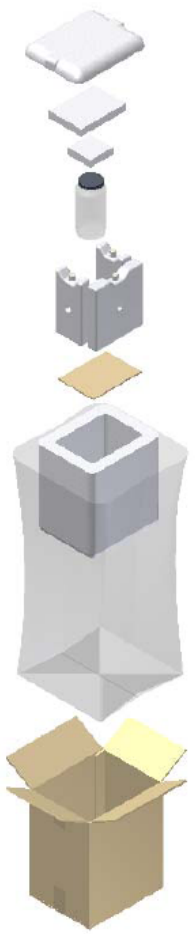

Package Details

Package Contents:

Item	Description	Quantity
COR-H21987402	Carton	1
COR-HC1968742	Corrugated Bottom Pad	1
HMS-8187A	Large Foam Top Pad	1
HMS-81874	Small Foam Top Pad	1
HMS-8687A	Large Ice Pack	1
HMS-86875	Small Ice Pack	2
HMS-86911	2-Piece EPS Cooler	1
HMS-8113A	Plastic Bag	1
HMS-8133A	5-3/4" Nylon Cable Tie	1

Transportation:

Transportation Mode:	Contact Berlin Packaging when Shipment is other than Ground Transportation.

Disclaimer:
It is the responsibility of each person offering a hazardous material for transportation to ensure that such packaging is compatible with their lading. Failure to heed this warning could result in a serious incident.

PA Warehouse: 2300 Sweeney Drive, Clinton, PA 15026 800.413.8867

BerlinDangerousGoods.com

©2018. All rights reserved. This document may not be copied, shared, reproduced, distributed, transmitted, displayed, or published to external parties without the prior written permission of Berlin Packaging.

DANGEROUS GOODS A DIVISION OF BERLIN PACKAGING

Catalog #

HMS-68740

1 x 32 oz. Glass Bottle with EPS Cooler with Ice Packs

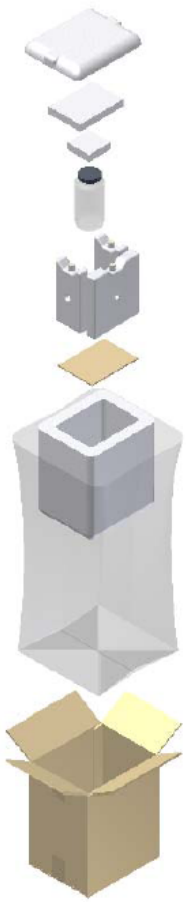

Closing Instructions

1. Construct carton and seal bottom flaps with 2" 3M #375 tape on center seam with a 2" minimum overlap on the sides. Outer flaps should meet in the center
2. Place plastic liner bag into carton (if desired)
3. Place bottom EPS foam cooler into carton
4. Place corrugated bottom pad into bottom of EPS cooler
5. Fill (1) 32 oz. bottle, but do not overfill with product
6. Close bottle tightly. For proper torque on bottle options please visit www.berlinpackaging.com/torque
7. Place (1) bottle into EPS cooler
8. Place (2) small ice packs on the short sides of cooler around bottle
9. Place (1) large ice pack on long side of cooler on side of bottle
10. Place (1) small foam top pad on top of bottle closure
11. Place (1) large foam top pad on top of small foam pad
12. Close EPS cooler with top EPS cover
13. If using plastic liner bag, seal off the top of the bag by twisting the end and close with a cable tie
14. Close carton and seal top flaps with 2" 3M #375 tape on center seam with a 2" minimum overlap on the sides. Outer flaps should meet in the center

PA Warehouse: 2300 Sweeney Drive, Clinton, PA 15026 800.413.8867

BerlinDangerousGoods.com

©2018. All rights reserved. This document may not be copied, shared, reproduced, distributed, transmitted, displayed, or published to external parties without the prior written permission of Berlin Packaging.

APPENDIX III-6

Example Chain of Custody Form

ANNUAL RECHARACTERIZATION: 2018 SAMPLES FOR 2019 WASTE CODES

Ship Samples to: TestAmerica Laboratory, 301 Alpha Drive, RIDC Park, Pittsburgh PA 15238

TELEPHONE: 412.963.2445 (Debra Bowen - AR Project Manager)

COLLECTION INFORMATION

SAMPLE ID #	BRANCH	DATE	TIME	DESCRIPTION OF SAMPLE (circle one)	NO. OF CONTAINERS	DEPARTMENT ID
	Customer Name(s) and #(s)			Premium Solvent PWS Bulk Tank PWS Dumpster Sludge PWS Tank Bottoms Immersion Cleaner (Petroleum) Immersion Cleaner (Aqueous) Dry Cleaning PERC Bottoms Dry CLeaning PERC Filters Dry Cleaning NAPHTHA Bottoms Aqueous Brake Cleaner Paint Gun Cleaner Related Waste Paint Related Waste (Paint Waste Only) APW APW Bulk Tank APW Dumpster Sludge APW Tank Bottoms Used Oil Antifreeze	1	COLLECTOR NAME/PHONE NUMBER:

ANALYSIS REQUEST

TCLP Metals, TCLP Volatiles, TCLP Semivolatiles, Flash Point, pH, and Specific Gravity

FINAL RESULTS REQUEST

Results to:	**Rick Haskins**	**AND:**	**Results to:**	**Geoff Bond**
Address:	**Safety-Kleen Systems, Inc., 1502 East Villa St., Elgin, IL 60120**		**Address:**	**Safety-Kleen Systems, Inc., 1502 East Villa St., Elgin, IL 60120**
E-mail address:	rick.haskins@safety-kleen.com **Phone : 847.468.6766**		**E-mail address:**	geoff.bond@safety-kleen.com **Phone : 847.468.6735**

SAMPLE TRANSFER RECORD

RELINQUISHED BY	DATE	TIME	RECEIVED BY	DATE	TIME
SIGNATURE OF COLLECTOR:					

Was sample kept chilled until relinquished for shipment to lab? Yes__ No__

If no, explain:

Airbill Number:

LAB USE ONLY

TEMPERATURE WHEN RECEIVED_____°C

SAMPLE KIT OPENED AND CHECKED IN BY_____ TIME _____ DATE _____

C.O.C. SEALS SIGNED, DATED, AND INTACT ON ALL SAMPLE JARS? YES_____ NO_____ IF NO, EXPLAIN _____

SHIPPING NOTES/LAB COMMENTS: _____

PART IV

FACILITY DESIGN

PART IV

FACILITY DESIGN

A. Containers
(22 CCR 66270.15, 66264.170)
(40 CFR 270.15, 264.170)

1. Describe:

There are three container storage areas located on site. The location of the container storage areas is shown on Figure I-4. The containers may be stored in the example configurations shown in Figure IV-1. The only waste terminated at the facility is spent parts washer solvent (either petroleum- or aqueous-based). The waste is received in containers and is emptied into a 12,000-gallon underground storage tank (UST). If containers of spent parts washer solvent are not emptied within 24 hours of receipt in the facility, they are stored in the storage rooms. Dry absorbent pads are used to remove wastes that are collected in the secondary containment system. The used dry absorbent pads are containerized and managed as a hazardous waste. If a larger quantity of liquid accumulates in the secondary containment trenches, it will be either be transferred (pumped) into an empty container and transported to an appropriate facility as a hazardous waste or will be transferred into UST. Base of the container storage areas are maintained free of cracks or gaps and are sufficiently impervious to contain leaks, spills, and accumulated liquids.

Although the storage capacity of the permitted container storage areas may be up to 36,500 gallons, Safety-Kleen limits the capacity to a maximum of 5,540 gallons.

- Capacity of DSA A- 1,730 gallons
- Combined capacity of DSA B and C- 3,810 gallons total

a. Type of containers stored
(66264.171, 66264.172, 66270.15(a)(3)
(40 CFR 264.171, 264.172, 270.15(a)(3))

5-, 10- , 16-, 30-, 55-, 85-gallon steel or polyethylene containers; and up to 350-gallon steel or polyethylene totes are typically used to store wastes at the facility (note that all sizes given are "nominal"). Any container received in transit at this facility is approved by Department of Transportation (DOT).

b. Composition and design standard of containers stored and their linings and coatings, if any.
(22 CCR 66264.172, 66270.14(b)(19))
(40 CFR 264.172, 270.14(b)(19)

Safety-Kleen packages all wastes for transportation under the guidelines for package applications and exceptions under 49 CFR

173. Each package meets the testing requirements under 49 CFR 173 as it applies to each individual package.

c. Types of wastes to be stored in each of the different type and composition of containers described above
(22 CCR 66264.172, 66270.14(b)(2))
(40 CFR 264.172, 270.14(b)(2))

The only waste terminated at the facility is spent parts washer solvent (either petroleum- or aqueous-based). Applicable waste codes include D001, D002, D004-D011, D018, D039, and D040, and California Waste Codes (CWC): 133, 134, 213.

Type of over-packing material used in each case above
(22 CCR 66264.172, 66270.13(i), 66270.14(b)(19))
40 CFR 264.172, 270.13(i))

DOT-specified containers are used, but typically 85-gallon steel or polyethylene containers are used for overpacking.

e. Data, which demonstrate that the wastes are compatible with the materials of construction of the containers and their linings or coatings and with overpacking material used
(22 CCR 66264.172, 66270.14(b)(19))
(40 CFR 264.172)

Safety-Kleen has had extensive experience in managing the types of wastes that the facility handles. Based on extensive use of containers, there has been no evidence or circumstances of incompatibility of wastes with containers.

f. Labels used to identify contents of each container
(22 CCR 66262.34(f), 66270.14(b)(19), 66270.15(c))
(40 CFR 262.34(a) and (c), 270.15(d))

All containers stored at the facility are labeled to indicate:

- Composition and physical state of the waste
- Statement(s) that call attention to the particular hazardous waste properties of the waste
- Name and address of the waste producer

2. Certification:
(22 CCR 66264.175(c), 66270.14(a) and (b)(9))
(40 CFR 270.14(a))

a. Statement certifying that an engineer registered in California has approved the design and construction of the container storage area, appurtenant structures, and containers for the intended uses

Refer to Appendix IV-1 for certification statement.

b. Name and registration license number of the engineer

John W. Matthews, Registered Professional Engineer
California, No. C 64105.

3. For containers to be transported, documentation that for the respective waste type to be contained, each container meets the appropriate DOT packaging requirements under 49 CFR Parts 173, 178, and 179
(22 CCR 66262.30)
(40 CFR 262.30)

49 CFR 173, 178, and 179 were reviewed. Part 178 prescribes the manufacturing and testing specifications for packaging and containers used for transportation of hazardous materials. Compliance with this part is the responsibility of the packaging or container manufacturer. Part 179 prescribes specifications for tank car trucks used for the transportation of hazardous materials. Compliance with this part is the responsibility of the tank car builder. Parts 178 and 179 do not apply to Safety-Kleen because it is neither a packaging or manufacturing business, nor a builder of tank car tanks. Part 173 includes requirements that must be observed in preparing hazardous materials for shipment, for which Safety-Kleen is responsible. Safety-Kleen complies with Part 173 by shipping hazardous materials listed in 172.101 Hazardous Materials Table according to the specific packaging requirements of Parts 172 and 173. Safety-Kleen uses only DOT-approved or exempt containers for DOT regulated wastes.

Safety-Kleen uses only containers that have been shown through general industry application to be suitable for storage and transportation of other wastes.

4. Operational procedures for containers

a. Wastes in poor containers are transferred to good containers or are otherwise managed to prevent release of wastes
(22 CCR 66264.171, 66270.14(b)(19))
(40 CFR 264.17)

It is Safety-Kleen's practice to inspect the condition of the containers as they are received and during the facility inspections. If a container is in poor conditions (i.e., leaks, excessive dents, or

rust), the contents are emptied immediately into an appropriate container in good condition. The facility ensures that the damaged container is overpacked or emptied in accordance with 22 CCR 66261.7, and shipped to an appropriate facility.

b. Containers or their liners are compatible with the wastes contained
(22 CCR 66264.172, 66270.14(b)(19))
(40 CFR 264.172)

49 CFR Parts 173, 178, and 179 were reviewed. Part 178 prescribes the manufacturing and testing specifications for packaging and containers used for transportation of hazardous materials. Compliance with this part is the responsibility of the packaging or container manufacturer. Part 179 prescribes specifications for tank car trucks used for the transportation of hazardous materials. Compliance with this part is the responsibility of the tank car builder. Parts 178 and 179 do not apply to Safety-Kleen because it is neither a packaging or manufacturing business, nor a builder of tank car tanks. Part 173 includes requirements that must be observed in preparing hazardous materials for shipment, for which Safety-Kleen is responsible. Safety-Kleen complies with Part 173 by shipping hazardous materials listed in 172.101 Hazardous Materials Table according to the specific packaging requirements of Parts 172 and 173. Safety-Kleen possesses or purchases no containers made of or lined with any of the incompatible materials. Therefore, all wastes handled at the facility are compatible with their containers, which are made of or lined with materials other than these incompatible materials.

c. Containers are kept closed except when waste is added or removed
(22 CCR 66264.173(a), 66270.14(b)(19))
(40 CFR 264.173(a))

With the exception of containerized spent parts washer solvent, none of the containerized wastes are opened at the facility except when adding or removing waste, and/or sampling. Containers holding spent parts washer solvent are opened within the Return and Fill (R&F) station, lifted over the drum washer, then the contents are poured directly into the drum washer (contents of the washer are piped to the underground waste storage tank). The empty containers are rinsed in the drum washer, refilled with clean parts washer solvent, and redistributed to Safety-Kleen. customers.

d. Description of management practices to ensure that

containers will not rupture or leak
(22 CCR 66264.171, 66264.172, 66264.173, 66270.14(b)(19))
(40 CFR 264.171, 264.172, 264.173)

The containers are kept upright at all times and are handled by a winch, hand truck, or hoist during loading, or slid in an upright position to prevent accidental dropping. Containers are carefully stacked at the facility using a pallet jack or forklift. The containers are stacked no more than approximately 6-feet high (two 55-gallon drums). The floor is sloped to provide drainage from the base of the drums.

e. Containers and the container storage area are inspected weekly for evidence of deterioration
(22 CCR 66264.174, 66270.14(b)(19))
(40 CFR 264.174)

It is a Safety-Kleen policy to inspect the containers and the container storage areas each operating day for evidence of deterioration.

f. Containers of ignitable or reactive wastes are stored 50 feet from property line and onsite buildings
(22 CCR 66264.176, 66270.14(b)(19), 66270.15(b))
(40 CFR 264.176, 270.15(c))

Safety-Kleen does not handle reactive wastes at the facility. Ignitable wastes are stored in the container storage area, which is 50 feet or more from adjacent property lines.

g. Incompatible wastes are not placed in the same container
(22 CCR 66264.177(a), 66270.15(c))
(40 CFR 264.177(a), 270.15(d))

This section is not applicable because none of the wastes handled at the facility are incompatible with one another. Other non-regulated materials may be stored in the container storage area provided the materials are compatible.

h. Waste is not placed in an unwashed container that had previously held an incompatible waste or material
(22 CCR 66264.177(b), 66270.15(c))
(40 CFR 264.177(b), 270.15(c)

This section is not applicable to this facility. Wastes handled at the facility are compatible with one another. In addition, Safety-Kleen only places waste in containers designated for specific wastes types. New or refurbished containers are used where

wastes are transferred from the damaged container into a new container.

i. Containers holding wastes incompatible with wastes nearby are separated by a dike of other barrier from those nearby wastes
(22 CCR 66264.177(c), 6270.15(c))
(40 CFR 264.177(c), 270.15(c))

None of the wastes that are stored (terminated) at the facility are incompatible with one another. Incompatible wastes that are handled at the facility on transfer basis are segregated properly.

j. Empty containers contaminated with hazardous waste are handled as hazardous waste
(22 CCR 66261.7, 66270.14(b)(10))
(40 CFR 261.7)

This section is not Applicable- Empty containers are not managed as hazardous waste. Spent parts washer solvent containers are emptied in drum washers located in the R&F station. During emptying the container, waste solvent is pumped into the waste UST. A small volume of clean solvent may be used in the process, if necessary. This clean solvent is obtained from the fill pump that is used to refill the clean containers with product (small amount of water may be used during emptying spent aqueous part washer containers).

The empty containers meet the standards of Title 22 CCR 66261.7. The empty containers are refilled with product Therefore, the containers are excluded from classification as a waste according to the California Health and)22CCR 66261.7c(3).

Containers, which are deemed no longer fit for use will be transported off site for proper disposal and will be managed in accordance with title 22 CCR 66261.7.

k. Description of procedures to comply with 66261.7 for empty containers not handled as hazardous waste
(22 CCR 66261.7, 66270.14(b)(19))
(40 CFR 261.7)

The spent parts washer solvent containers are emptied in drum washers located in the R&F station as described in IV.A.4.J above. Typically, these containers are filled with new products. In cases that the container is not suitable to be filled with a solvent product, the container is emptied in accordance with 66261.7(b). The container is marked empty and will be shipped off site to reclaim its scrap value or be reconditioned within one year. During

transportation requirements of 49 CFR Part 173 is followed.

l. Containers subject to deterioration from the weather are protected.
CCR 66264.173(b), 66264.175(b)(2), 66270.14(b)(19), 66270.15(a)(2))
(40 CFR 264.173(b), 264.175(b)(2), 270.15(a)(2))

All containers are stored indoors and are not subject to deterioration from the weather.

m. Containers holding PCBs or devices containing PCBs are managed in accordance with Part 761, Title 40 CFR (22 CCR 66270.14(b)(19))
(40 CFR, Part 761)

Safety-Kleen does not handle any PCB-containing waste at this facility.

5. Secondary containment for containers
(22 CCR 66264.175, 66270.15(a), 66270.14(b)(19))
(40 CFR 264.175, 270.15(a))

a. Describe containment system showing at least:

1. Basic design, parameters, dimensions, and construction materials showing that the base is free of cracks or gaps, and is sufficiently impervious to ensure that spills, leaks, and precipitation can be collected and held until detected and removed

There are three container storage areas on site. Spent Parts washer containers are unloaded at the R&F station. If containers are not emptied in the waste UST within 24 hours, they are stored in the container storage areas, which are equipped with curbs, a concrete floor, and trenches to contain any spills and prevent flow of wastes to the outside. Should spills occur, the spilled materials are removed in a timely manner. The trenches provide the containment for the waste stored. Containment of rainwater is not required because the storage area is completely enclosed within a building as shown in Figure I-4. Calculations of containment capacity are given in Appendix IV-1.

2. How design and operation promote drainage or prevent contact between containers and standing liquids

The containers are stored in the container storage rooms at all times except when actively loading or unloading for transport. The floors of the container storage areas are sloped to allow drainage to the trenches. The containments provided for the container storage areas are designed to be sufficient to prevent any contact with standing liquids.

3. Capacity of containment system relative to number and volume of stored containers; 10% of total volume or volume of largest container (excepting those which do not contain free liquids), whichever is greater, plus rain from 24-hour, 25-year storm

The capacities of the container storage areas are described in Appendix IV-1. The additional requirement that these areas also be sufficient for storm water containment during a 25-year frequency, 24-hour duration storm event is not applicable because the container storage areas are indoors.

4. Provisions for preventing run-on, or excess capacity to contain any run-on, which may enter containment system in addition to capacity requirements of Item 3 above

The containers are stored in the enclosed storage rooms and warehouse area. The ground slopes away from the facility on all sides, and runoff is conducted to storm drainage conduits. Therefore, run-on to these units will not occur.

5. How accumulated liquids can be analyzed and removed in time to prevent overflow of the system

In the container storage areas, any spills will be removed from the spill containment systems by a hand-held, portable electric pump (the COMS pump), which is approved for use with flammable, ignitable, and combustible liquids, an explosion-proof wet-dry vacuum cleaner, or absorbent materials. All liquids will be removed form the secondary containment systems within 24 hours of detection. Because the characteristics of the stored wastes are known, no analyses will be performed on the materials collected from the containment areas. All collected materials will be manifested to an appropriate recycle/treatment center. In the unlikely event that multiple wastes are spilled, the most conservative waste codes are

used.

6. Required aisle space

Adequate aisle space (at least 30 inches between rows of pallets or equivalent portable platforms, and at least 30 inches from the inner perimeter of the drum storage areas) is maintained to allow unobstructed movement of personnel, fire protection equipment, and decontamination equipment to any area of facility in an emergency. The container storage area "C" is equipped with four 45-pound dry chemical fire extinguishers. Storage rooms "A", and "B" are in the same warehouse that Unit "C" is located. In addition to the dry chemical extinguishers, there are ABC type fire extinguishers in these rooms as well. The R&F station is a small working area with three walls and an open side that provides an efficient arrangement for loading and unloading and filling operations. During an emergency, the area is readily accessible by emergency personnel and equipment.

7. Layout of containers within containment system

The facility layout showing location of the container storage, and R&F station is shown in Figure I-4 (Site Plan).

8. Provisions made for expansion or contraction during extreme temperatures

Safety-Kleen has reviewed the Southern California climate data and does not anticipate that the facility will experience extreme temperature changes that would affect the secondary containment structures. However, cold joints exist in the exiting container storage areas.

b. Describe containment system used for ignitable or reactive wastes and incompatible wastes, showing at least:

1. Locations of containers holding ignitable or reactive wastes and the buffer zone (50 feet) between such containers and the property line
(22 CCR 6264.176))
(40 CFR 264.176)

Spent parts washer solvent is not ignitable. Ignitable wastes that are managed on transfer basis may be stored in DSA "C" less than 10 days. Containers are located in the container storage areas, in the example configuration

shown in Figure IV-1. The minimum distance of DSA "C" to the adjacent property is at least 50 feet. No reactive wastes are stored at this facility.

2. Locations of incompatible wastes and devices such as dikes, berms, walls, or distances of separation used to protect the wastes from each other (22 CCR 66264.177) (40 CFR 264.177)

None of the permitted wastes (terminated at the facility are incompatible. Incompatible wastes that are managed on a transfer basis are properly segregated.

c. Describe containment for loading and unloading areas

The containerized wastes are loaded/unloaded in front of the warehouse near the container storage areas and then moved as soon as possible to the container storage areas. Emergency containment equipment such as booms and absorbent pads are available on site. Site personnel have been trained to use this equipment, if necessary, to control spills from going off site**.** The entire site is provided by curbs and berms.

d. Certification:

1. Statement certifying that an engineer registered in California has approved the design and construction of each secondary containment area and structure for the intended uses and regulatory compliance.

A certification statement for the secondary containment structures for the container storage areas is presented in Appendix IV-1.

2. Name and registration number of engineer

John W. Matthews, Registered Professional Engineer California No. C 64105.

6. Treatment in containers (22 CCR 66270.14(b)(19))

This section is not applicable because no wastes are treated (chemically or physically) in containers.

a. Detailed description of the unit being used or proposed which includes:

1. **Processes and equipment**

2. **Physical characteristics of treatment process**

3. **Chemical reaction and reaction efficiencies**

4. **Construction materials**

5. **Dimensions**.

6. **Detailed plans and descriptions showing**

    a. **Location -**

    b. **Design -**

    c. **Construction -**

    d. **Operation** -

    e. **Maintenance -**

    f. **Inspection -**

7. **Prevention of releases to groundwater or subsurface environment -** Not applicable.

8. **Prevention of releases to surface water, wetlands, or surface soils -** Not applicable.

9. **Prevention of releases to the air -** Not applicable.

b. **Detailed assessments and maps for the region surrounding the site which include:**

    1. **Hydrologic assessments -** Not applicable.

    2. **Geologic assessments -** Not applicable.

    3. **Meteorological assessments -** Not applicable.

    4. **Land-use maps -** Not applicable.

c. **Information on the potential pathways of exposure of humans or environmental receptors to hazardous waste or hazardous constituents, and information on the potential magnitude and nature of such exposures -** Not applicable.

d. **For any treatment unit, a report on a demonstration of the effectiveness of the treatment based on laboratory or field data -** Not applicable.

e. **Examples of treatment processes include:**

1. **Chemical treatment -** Not applicable.

   a. **Acid/chemical stripping -** Not applicable

   b. **Neutralization -** Not applicable

   c. **Oxidation/reduction -** Not applicable

   d. **pH modification -** Not applicable

   e. **Precipitation -** Not applicable

   f. **Other -** Not applicable

2. **Physical treatment -** Not applicable.

   a. **Dewatering/drying -** Not applicable

   b. **Distillation/air stripping -** Not applicable

   c. **Evaporation -** Not applicable

   d. **Filtration -** Not applicable

   e. **Fixation/stabilization -** Not applicable

   f. **Separation -** Not applicable

   g. **Sizing/blending -** Not applicable

   h. **Thickening -** Not applicable

   i. **Other -** Not applicable

3. **Biological Treatment -** Not applicable - No biological treatment is performed in containers.

   a. **Aerobic decomposition -** Not applicable

   b. **Anaerobic digestion -** Not applicable

c. **Microbial biodegradation -** Not applicable

d. **Other -** Not applicable

B. Tanks used for storage or treatment:

The Safety-Kleen Los Angeles facility operates two 12,000-gallon USTs. One 12,000-gallon UST stores spent parts washer solvent (either petroleum-based or aqueous-based) received from the R&F station and from the containment area underneath the R&F dock. The other UST is used for storage of product. Figure I-4 shows the location and layout of the USTs and the R&F station.

The waste UST has two 155-gallon drum washer units attached. These drum washers are aboveground receptacles that are connected via above and below ground piping to the USTs. Figure IV-2 through IV-5 are schematics of the R&F station, and the associated piping, valves, and pumps. Containers of spent parts washer solvent are emptied into the drum washer basin. The empty container is then placed in the drum washer where it is cleaned by recirculating the solvent (water or mineral spirits). The drum washer is equipped with a filter screen, which removes some large particulates, (i.e., nuts, bolts, etc.) from the liquid before it is pumped to the underground tank. The screen prevents foreign objects from damaging the waste solvent pump. A tray is used for removing material due to incidental settling, and to keep pipe openings clear.

1. References to design standards or other information used in design and construction of each tank (22 CCR 66264.191, 66264.192, 66270.16) (40 CFR 264.191, 264.192, 270.16)

The USTs are a double-walled steel and fiberglass-coated UST and piping with secondary containment manufactured in accordance with the Underwriters Laboratories specifications (UL 58). The tank and the drum washer design drawings are included in Figures IV-2 to IV-5, and Appendices IV-2 and IV-3as follows.

Figure IV-2: R&F Shelter Piping Schematic
Figure IV-3: R&F Station Plan and Details
Figure IV-4A: R&F Shelter Air Tag Information
Figure IV-4B: Drum Washer/Dumpster Isometric
Figure IV-5: Tank System P&ID
Appendix IV-2: Tank Certification
Appendix IV-3: UST Installation Report

2. Number, type(s), and location(s) of all tanks at facility (20 CCR 66270.14(b)(1) and (b)(19)) (40 CFR 270.14(b)(1))

There are two double-walled steel and fiberglass-coated USTs. One tank for product and one tank for waste. Please see Figure I-4 for location of

the tanks within the facility.

3. Describe for each tank:

a. Design specifications including (22 CCR 66264.191, 66264.192, 66264.194, 66270.14(b)(19), 66270.16(a) and (b)) (40 CFR 264.191, 264.192, 264.194, 66270.16(a) and (b))

The following design information is a summary for the underground waste tank system. Specific information regarding the waste tank is enclosed in Appendix IV-2.

1. **Dimensions -** The waste underground tank is 8 feet in diameter and 32 feet long. Drum washers are approximately 6 feet long, 3 feet wide, and 5 feet high.

2. **Capacity (in gallons) -** The waste UST has a nominal 12,000 gallons capacity. Each drum washer unit has a capacity of 155 gallons.

3. **Shell thickness and corrosion allowance -** The inner shell thickness is 1/4" hot-rolled carbon steel (HRCS). The outer wall is specified as 7-gauge carbon steel with 100-mil (approximately 1/8") fiberglass coating. The wastes are not corrosive to the inner shell (0.002"/year) and the outer shell is protected by fiberglass. All waste constituents have been analyzed with respect to corrosion potential with HRCS. Adequate corrosion allowance has been provided assuming a useful tank life of 30 years even though the tank is warranted for 16 gauge HRCS. As demonstrated in Section IV.B.3.d, the drum washer is compatible with the waste.

Information on the thickness and corrosion protection of the waste tank is enclosed in Appendix IV-2.

4. **Pressure rating**

- **Design -** The tank and drum washers are designed to operate at atmospheric pressure.
- **Operating -** The tank operates at atmospheric pressure.

5. **Structural supports -** The tank is supported by a granular compacted bedding and backfill and has

the added protection of a 6-inch reinforced concrete slab. The drum washer is supported by steel legs and grating.

6. **Roof design -** Not applicable to the underground tank. The roof support of the drum washer station is 16-gauge steel.

7. **Age of tank System -** The tank was installed in December 1993. the assessment performed in 2017 estimated life expectancy of 25 years after 2017 (until 2042).

8. **Tank operating temperature -** Tanks will operate at ambient temperatures.

9. **Location of tank (indoor/outdoor) -** The location of the tank systems are shown on Figure I-4.

10. **Tank orientation (vertical/horizontal) -** The tanks are configured in a horizontal position.

b. Construction materials (specify type(s))
(22 CCR 6270.16(a) and (1))
CFR 270.16(a))

The USTs are constructed of HRCS with a fiberglass coating on the outer steel shell. The tanks are constructed to ASTM A36 specifications for steel with minimum tensile strength of approximately 58,000 psi. The drum washers are constructed of 16-gauge HRCS. Information on the constructed materials for the waste tank is enclosed in Appendix IV-2.

c. Lining materials:
(22 CCR 66270.16(a) and (1))
(40 CFR 270.18(a)

This section is not applicable because the tank is not lined; the inner shell is constructed of HRCS. The exterior shell has an outer 100-mil fiberglass coating over 7-gauge carbon steel.

1. **Interior -** Not applicable

2. **Exterior -** Not applicable

3. **Thickness -** Not applicable

d. Corrosion or erosion resistance to the wastes stored and to

external environmental effects
(22 CCR 66264.191(c), 66264.192(b), 66264.194(a), 66270.16(e) and (1))
(40 CFR 264.191(b), 264.192(a), 264.194(a), 270.16(e))

Safety-Kleen has based its design specifications on the National Association of Corrosion Engineers "Corrosion Data Survey - Metal Section" (1974), which states that the corrosion rate for storing parts washer solvent (naphtha in steel) is less than 0.002 inches per year. This value is a reasonable estimate for corrosion by the waste stored in the parts washer solvent tank since the contaminants of the spent parts washer solvent are generally particulates and water, which sink below the organic layer and should not increase the corrosion rate of the tank. The corrosion rate from external environmental effects is low since the tank is located in pea gravel.

The tank is equipped with a cathodic protection system explained in Appendix IV-3 (Page 4 of the UST Installation Report prepared by Geraghty and Miller, Inc.).

e. Design specifications for the foundation of the tank including any sub-foundation work and seismic reinforcement, such as soil compaction, piles, etc.:
(22 CCR 66264.191, 66264.192, 66270.14(b)(19), 66270.16(a), (f) and (k)
(40 CFR 264.191, 264.192, 66270.16(a) and (f)).

1. Refer to Appendix IV-3 including ”Underground Storage Tanks Installation Report, dated December 14, 1993, and prepared by Geraghty & Miller, Inc.”, page 6 paragraph 3 stating that *“the UST was constructed by Modern Welding Company and complies with UL-58, UL-142, EPA 280.20, and NFPA 30 and 31. Also, page 8, paragraph 1 of that report states that “ ancillary equipment was installed per API 1615 and NFPA 30 and 31.”*

2. **Description -** Safety-Kleen specifications require a tank foundation of granular compacted bedding and backfill, which will support and maintain loads generated by the full tanks. The tanks are anchored to concrete deadmen to prevent possible flotation.

3. **Fire protection rating, if applicable –** The tank meets Class II requirements of the NFPA Codes for storage of combustible and flammable liquids.

4. **Impacts of extreme weather conditions -** The Southern

California climate does not generally have extreme weather conditions that would threaten the tank systems.

5. **Seismic structural strength –** There is no foundation, because the UST is embedded in fill and is assumed to move with the fill during seismic events. A seismic assessment of the UST system is included as Appendix IV-2.

f. Other pertinent characteristics, such as the date the tank went into service and its expected life
(22 CCR 66264.191, 66264.192, 66270.14(b)(10), 66270.16(i))
CFR 264.191, 264.192)

The tank assessment performed in 2017 estimated life expectancy of 25 years after 2017 (2042). The tank is equipped with a cathodic protection system explained in Appendix IV-3 (Page 4 of the UST Installation Report prepared by Geraghty and Miller, Inc.).

g. Previous use of tank
(22 CCR 66264.191, 66270.14(b66270.16(l))
(40 CFR 264.191)

1. **Material handled –** Spent parts washer solvent (petroleum- or aqueous-based)

2. **Length of service –** Installed in December 1993

h. Process and pipe flow diagrams
(22 CCR 66270.16(d))
(40 CFR 270.16(d))

See Figure IV-2 for the R&F dock piping Schematic. Containers of spent parts washer solvent are emptied into the drum washer units. After washing containers, the spent solvent is pumped from the drum washers to the underground waste tank via above and below ground piping. Underground piping is double walled.

i. Maintenance of protective distances required by NFPA
(22 CCR 66264.198(b), 66270.16(j))
(40 CFR 264.198(b), 270.16(j))

Ignitable wastes stored in containers are located at least 50-feet from the property line. The underground tank is located in accordance with NFPA standards.

4. Design drawings and tank specifications certified by registered professional engineer
(22 CCR 66264.191(b) - (f), 66264.192(b), 66270.14(a), 66270.16(a))

(40 CFR 264.191(a) - (d), 264.192270.14(a), 270.16(a)

The certifications by a California registered engineer attesting that the tank systems are suitably designed for their intended uses and properly installed are included in Appendix IV-2.

5. Describe for each tank
(22 CCR 66264.191, 66264.192, 6264.194(b), 66270.16)
(40 CFR 264.191, 264.192, 264.191(b), 270.16)

a. Piping - Underground piping is double-walled with corrosion protection provided by the polyurethane construction material of the outer wall. The above ground piping in the R&F station is 2-inch diameter carbon steel, and is located within the secondary containment provided for the drum washer.

b. Instrumentation - The waste tank is instrumented and monitored in accordance with Title 23, Chapter 16 of the California Code of Regulations for Underground Tanks. Please refer to Appendix IV-34.

Liquid Level Monitoring - Liquid level monitoring determining the amount of liquid in the tank includes a high-level alarm that is activated when the liquid reaches a specified volume, which is less than or equal to 90 percent of the tank capacity. There is also a level monitor, which continuously records tank volume in gallons, inches of water beneath the organic liquid, temperature, and specific gravity. The data is recorded on a paper tape located inside the west wall of the main building near the overhead door as shown on Figure IV-1. The high-level sensor has both visual and audible alarms. The visual alarm is a lighted panel, which has red and green lights. The high-level sensor is a Veeder-Root TLS 350 or an equivalent system. The tank levels are also manually checked daily and recorded on a clipboard. Appendix IV-4 contains the Veeder-Root UST monitoring system information. An example of the inspection form used to record tank levels and a completed tank level form are presented in Appendix VIII-1.

c. Process flow - The spent parts washer solvent is transferred via above and below ground piping from the drum washers to the waste tank. Containers of spent parts washer solvent are unloaded at the R&F loading dock by hand or by using a handcart. A forklift may be used to unload the containerized wastes, when necessary. The containers are opened, and the contents are poured into the drum washers. The containers are washed by being rotated around a stationary brush and recirculating the spent solvent through a spray wand. When the liquid in the drum washer reaches a set level, a limit switch activates the transfer pump, which transports the waste to the waste tank. The pumps, valves,

and piping are shown on Figures IV-2 to IV-4. For the cleaning of containers fresh solvent (or water for aqueous waste solvent drums) is used and the cleaning solvent is isolated from the UST and managed appropriately. Waste solvent is removed from the UST by tanker trucks through temporary aboveground hose connections. The accumulated sludge is removed by a vacuum truck as needed.

d. **Feed systems -** The spent parts washer solvent is fed into the waste tank through piping as shown in Figure IV-2. The pumps used to transfer waste from the R&F station to the tank (one for every two drum washer) are rated at approximately 1 ½ horsepower, requiring 220 volts or equivalent.

e. **Waste feed cutoff system**

1. **Automatic -** An automatic alarm system indicates when the tank is at 90 percent of capacity. There are no automatic waste feed cutoffs.

2. **Manual –** Two 2-inch manual ball valves, one by each drum washer unit, are used to control flow of waste into the tank. The valves by the drum washer unit are shown on the schematic diagram Figure IV-4A. **3. Emergency bypass to another tank -** Emergency by-pass to another tank is not applicable since there is no continuous process flow of wastes to the tanks. The liquid level in the UST is checked daily. Flow to the present parts washer solvent storage tank from the R&F dock is cut off by any one of four valves and the liquid can be retained in the R&F dock. If an emergency requires removal of the waste from the tank, a vacuum truck can be used to remove wastes.

4. **Freeboard -** Freeboard is not applicable to enclosed UST. However, in addition to manually checking liquid levels daily, a liquid level alarm is triggered when the tanks are at 90 percent of capacity.

5. **25-year, 24-hour storm containment for outdoor open tanks -** Not applicable since the tank is underground.

f. **Bypass system -** Not applicable (see Section IV.B.5.e.3 above). There is no bypass system for the tanks.

g. **Pressure controls –** There is a 2-inch diameter tank vent to relieve pressure and vacuum (see Section IV.B.3.a.4.e above). The tank and drum washers operate at about atmospheric pressure.

h. **Temperature controls -** Not applicable. The tank and drum washers operate at ambient temperature.

i. **Liquid level indicators -** The tank is equipped with a liquid level indicator and a high-level alarm. The high-level alarm will trigger an audible alarm and visual signal (yellow flashing light) when the tank is at 90 percent of their capacity.

j. **Vapor control system and tank venting –** The waste UST is equipped with a vent. The location and design of the vent is shown in Appendix IV-2. The vent pipe runs underground to the edge of the adjacent building and extends above the roofline to minimize emissions in the work area.

k. **Labels to identify contents -** A painted sign on the concrete near the underground tank ports identifies the contents of the tanks.

l. **Joint:**

1. **Types -** The above ground portion of pipes are steel-threaded together. The tank itself is welded.

2. **Condition -** All of the joints were inspected prior to installation.

m. **Welds (interior/exterior)**

1. **Types -** No welding was done during tank installation. Each tank arrived as a complete unit and the piping was threaded or bonded together.

2. Condition - **Not applicable**

n. **Plumbing**

1. **Description -** Tank and drum washer plumbing is shown on Figure IV-2.

2. **Design –** All underground plumbing is double-walled steel. All aboveground piping is located in the contained R&F station.

3. **Compatibility -** The tank wastes are compatible with the steel plumbing as discussed previously in this Part.

o. **Pumps and values**

1. **Description -** Valves and pumps are shown in Figure IV-

4A. The valves are ball valves located in the R&F dock by each drum washer unit. The pump for recirculation at each drum washer is an approximately 2-horsepower pump and the solvent transfer pumps are approximately 1-1/2 horsepower; one for every two drum washers. The primary aboveground piping and gate valves are constructed of carbon steel, and the ball valves are constructed of brass. The piping and valves are compatible with the spent parts washer solvent.

2. **Safeguards against accidental releases -** The tank is equipped with high-level alarms. Also, there are manual valves downstream of the drum washers to stop flow into the waste tank. R&F operators are trained in the use of the tank systems. The systems are inspected daily for leaks and damage. Tank levels are continuously monitored.

p. **Pumping rates -** The pump from the R&F dock to the waste tank is approximately a 2-1/2 horsepower pump. The pumps used for recirculation at the drum washers are approximately 2 horsepower. The pumping rate is approximately 50 gallons per minute (gpm) and 45 gpm for each pump, respectively. The motors on the pumps are rated as Class 1, Division 1, Groups C and D and therefore are spark protected, and compatible with the spent parts washer solvent.

q. **Lightning protection (NFPA 78.6-4) -** Not applicable to underground tanks.

r. **Other features, such as dip tubes, siphon-prevention, failure position of valves, etc. -** Siphoning is extremely unlikely with an underground tank. The valves are manually operated so the failure position is the manual setting of the valve. The high-level alarm panel is on the outside of the northwest wall of the R&F station. Facility lights are on photosensitive switches and automatically turn on preset light levels.

6. Describe:

a. **Type(s) and characteristics of wastes to be stored or treated in each tank**
(22 CCR 6264.17, 66264.191, 66264.192, 66264.194(a), 66264.198, 66264.199, 66270.16)
(40 CFR 264.17, 264.191, 264.192, 264.194(a), 264.198, 264.199, 270.16)

Spent parts washer solvent will be stored in the waste tank. The waste characteristics are detailed in section III, Waste Characteristics.

b. Specific gravity of each waste to be stored in each tank (22 CCR 66264.191, 66264.192, 66270.14(b)(19), 66270.16) (40 CFR 264.191, 264.192, 270.16)

The specific gravity of the wastes is detailed in Part III, Waste Analysis Plan.

c. Vapor pressure of each waste to be stored in each tank (22 CCR 66264.191, 66264.192, 66270.14(b)(19), 66270.16) (40 CFR 264.191, 264.192, 270.14(b)(19), 270.16)

The vapor pressure of the wastes is detailed in section III, Waste Analysis Plan.

d. Storage temperature of waste to be stored in each tank (22 CCR 66264.191, 66264.192, 66270.14(b)(19), 66270.16) (40 CFR 264.191, 264.192, 270.16)

The storage temperature will be approximately at ambient air temperature. The tank monitoring system provides daily temperatures of the wastes in tanks.

e. Flame point/auto-ignition temperature of each waste to be stored in each tank 22 CCR 66264.191, 66264.192, 66270.14(b)(19), 66270.16) (40 CFR 264.191, 264.192, 270.14(b)(19), 270.16)

Spent parts washer solvent (petroleum-, or aqueous-based) with Flash point less than 140°F is not stored in UST. Flash point of Premium solvent is 150°F.

f. Layers of waste within each tank (22 CCR 66270.14(b)(19))

The spent parts washer solvent is in the liquid phase during storage. Dirt and other entrained foreign materials from sludge at the bottom of the tank necessitate periodic removal. When the sludge depth measures 18 to 21 inches in the underground storage tanks, or when deemed necessary, the service center requests a sludge removal tank truck from the recycle center. The sludge is pumped into the tanker truck from the underground storage tanks.

g. Compatibilities of wastes with tank materials and/or liners (22 CCR 6264.194(a), 66270.16) (40 CFR 264.194(a), 270.16)

The wastes are compatible with tank materials based on the corrosion rate ranges for steel tanks.

7. Storage tanks containing polychlorinated biphenyls meet applicable requirements of Part 761, Title 40 CFR
(22 CCR 66270.14(b)(19))
(40 CFR, Part 761)

This section is not applicable.

8. Identify whether tanks are partially or entirely situated below ground and whether or not the tank can be entered for inspection
(22 CCR 66264.191, 66264.192, 66264.193, 66270.14(b)(19), 66270.16)
(40 CFR 264.191, 264.192(a), 270.16(a) and (e)

The tank is situated entirely underground. The tanks can be entered for inspection via access manholes that are flush with the surrounding ground surface. Only a specialty contractor may enter tanks; Safety-Kleen personnel are not permitted to enter any tank, unless otherwise are trained to do so.

9. Certified Engineering Assessments
(22 CCR 66264.191, 66264.192(a)(b)(h), 66270.16(a), (e), (k), (l))
(40 CFR 191, 264.192(a) and (g), 270.16(a) and (e)

a. Integrity assessment for existing tanks without secondary containment, demonstrating that the tank system will not collapse, rupture, or fail
(22 CCR 66264.191(a) - (e))
(40 CFR 264.191(a) - (d))

Not applicable.

The assessment must address the following:

1. Design standards according to which tank system was constructed - Not applicable.

2. Hazardous characteristics of waste that have been and will be placed in the tank system - Not applicable.

3. Existing corrosion protection measures - Not applicable.

4. Documented or estimated age of the tank system - Not applicable.

5. Results of a leak test conforming to 66264.191(c)(5) -

Not applicable.

6. **Design requirements of 66264.191(a) -** Not applicable.

b. Design assessment for all Existing tank systems (22 CCR 66264.191(a) and (f))

Not applicable.

c. Integrity assessment for new tank systems demonstrating that the tank system will not collapse, rupture or fail; and that the tank system has sufficient structural integrity, is acceptable for managing hazardous wastes, and meets the requirements of 22 CCR, Division 4.5, Chapter 14, Article 10 (22 CCR 66264.192(a), (b), and (h)) (40 CFR 264.192(b) and (g))

The most recent tank integrity test is included in Appendix IV-2

The assessment must include the following information

1. **Design standards**

2. **Hazardous characteristics of wastes**

3. **For new tank systems or components, a corrosion assessment (if applicable):**

a. **Factors affecting potential for corrosion:**

- Soil moisture content
- Soil pH
- Soil sulfides level
- Soil resistivity
- Structure to soil potential
- Influence of nearby underground metal
- Existence of stray electrical current
- Existing corrosion protection measures

b. **Type and degree of corrosion protection:**

1. **Corrosion-resistant material of construction** – NA

2. **Corrosion-resistant coating with cathodic protection –** NA

3. **Electrical isolation devices –** NA

4. Design or operating measures to protect underground portions of tank system against damage from vehicular traffic

The storage tank and a portion of the piping systems are located beneath areas with truck traffic. Protection from vehicular traffic is provided by compacted soil cover and by a concrete slab.

6. Design considerations to ensure that:

- **Tank foundations will maintain load of full tank -** The foundation of each storage tank is provided by compacted backfill and concrete deadmen as discussed in Appendix IV-2. The concrete slab for the drum washers is supported on compacted sub-grade soil. The slab is strong enough to support the weight of drum washers full of liquid, their ancillary equipment, and spill equal to the volume of one of the drum washers. The drum washers are installed with structural steel framing on the slab. This framing secures the drum washers solidly in place.

- **Tank system will be anchored to prevent flotation or dislodgement (if located in saturated zone or a seismic fault zone) -** The tank is anchored with 1-inch galvanized anchor bolts with 10-inch thread and two nuts with four of these anchors located on each side of tank.

- **Tank system will withstand effects of frost heave -** Local climate does not affect the tank system for frost heave.

- **Seismic considerations -** Seismic considerations are detailed in Appendix IV-2.

Name and registration license number of the engineer
(22 CCR 66270.14(a) (b)(19))
(40 CFR 270.14(a)

Name: Dr. Joseph M. Plecnick
Registration Number: C26354
Date of Expiration of Engineer's Registration: 03/31/2020

10. Tank system installation
(22 CCR 66264.192(c) - (h), 66270.16, 66270.16(e) and (f))
(40 CFR 264.192(b) - (g), 270.16, 270.16(e) and (f))

Tank Installation Report in included in Appendix IV-3.

a. Describe procedures to prevent damage to the tank system during installation – This section is not applicable because the tank was installed in 1993.

b. Prior to covering, enclosing or placing in use, tank system must be inspected by installation inspector or registered engineer to locate and remedy:

1. **Weld breaks**
2. **Punctures**
3. **Scrapes of protective coating**
4. **Cracks**
5. **Corrosion**
6. **Other damage or inadequacies**

Items 1-6 above are addressed on Page 2 of the "1992 Design Assessment Proposed Used Solvent Storage Tank System Report by Geraghty & Corporation" (excerpts of the report is included in Appendix IV-3).

c. Backfill requirements for new underground tank systems or components:

1. **Use non-corrosive, porous, homogeneous backfill material**
2. **Completely surround tank and components with backfill**
3. **Compact backfill to ensure tank and piping are fully and uniformly supported –** NA

These issues are addressed on Pages 3, and 10 of the "1992 Design Assessment Proposed Used Solvent Storage Tank System Report by Geraghty & Corporation."

d. Test all new tanks and ancillary equipment for tightness (and

repair if necessary) prior to covering, enclosing or placing tank in use – This issue is addressed on Page 11 of the "1992 Design Assessment Proposed Used Solvent Storage Tank System Report by Geraghty & Corporation."

e. **Support and protect ancillary equipment against damage and excessive stress due to settlement, vibration, expansion, or contraction -** This issue is addressed on Page 3 of the "1992 Design Assessment Proposed Used Solvent Storage Tank System Report by Geraghty & Corporation."

f. **Field installation of corrosion protection system must be supervised by corrosion expert -** This issue is addressed on Page 13 of the "1992 Design Assessment Proposed Used Solvent Storage Tank System Report by Geraghty & Corporation."

g. **Statement by installation inspector or registered engineer, who supervised installation, certifying that tank system was properly installed** - This issue is addressed on Page 1 of the "1992 Design Assessment Proposed Used Solvent Storage Tank System Report by Geraghty & Corporation."

h. **Name and license number of inspector or engineer –**
Frank J. Johns, II, P.E.
California P.E. No. 29313

11. Underground tank monitoring systems
(22 CCR 66264.193(i), 66264.195, 66270.14(b)(19))
(40 CFR 264.193(k), 264.195)

a. **Describe monitoring system, including:**

1. **Visual inspection -** The above ground fittings of the tank are inspected each operating day.

2. **Hydrostatic and pressure testing -** The tank was pressure tested upon delivery before installation. The interstitial space in the double-wall tank is monitored.

3. **Groundwater monitoring wells –** There are no groundwater monitoring well on site.

4. **Leak detection system -** Veeder-Root System is examined annually by factory-trained technicians. A statement documenting the annual inspection is kept on file in the Facility Operating Record.

b. **Describe procedures to ensure that before the underground**

tank is covered, enclosed or placed in service, the tank is tested in accordance with the National Fire Protection Association, Pamphlet 329, "Recommended Practices for Handling Underground Leakage of Flammable and Combustible Liquids" for determining integrity of tank and connecting pipes

Before being placed into service, the tank was tested as described in Appendix IV-3. Refer to "Underground Storage Tanks Installation Report, dated December 14, 1993, and prepared by Geraghty & Miller, Inc.", page 3 paragraph 3 stating that "*The tank and vent piping was tested at 2.5 psi. and 60 psi. respectively for 60 minutes and no leaks were detected. The above tests were conducted per NFPA 329."* Also, in that report- page 4 paragraph 1 is stated that *"the secondary piping was pressurized to 5 psi. for 30 minutes and no leaks were detected. The above tests were conducted per NFPA 329."*

IV. B. 12. Operational procedures for tanks

a. Tank filling procedures
(22 CCR 66264.194, 66270.14(b)(19))(40 CFR 264.194)

1. **Connection points -** The tank connection points are discussed above in Section IV.B.5.

2. **Operation -** Tank operating procedures are detailed above in Section IV.B.5.

b. Treatment or storage of wastes in tanks precludes uncontrolled reactions
(22 CCR 66264.17, 66264.198, 66264.199, 66270.16(j))
(40 CFR 264.17, 264.198, 264.199, 270.16(j))

The only waste stored in the tank is spent parts washer solvent (either petroleum-based or aqueous-based). The only treatment at the facility is rinsing of containers after emptying the container into the waste UST via the R&F station (see section IV.B.15)

c. Wastes and treatment chemicals added to a tank cannot cause tank failure
(22 CCR 66264.17(b)(4), 66264.194(a), 66270.16))
(40 CFR 264.17(b)(4), 264.194(a), 270.16)

The tank is designed to contain used parts washer solvents, without failure, for the service life of the tanks.

The only hazardous waste stored in the storage tank is used parts

washer solvent (petroleum- or aqueous-based). This material is compatible with the steel tank in which it is stored. The tank was new when it was installed, and it has been dedicated for storage of this waste stream. Incompatible raw materials or wastes have not been stored in this tank.

The facility does not receive nor treats any reactive or incompatible waste in the tank system. Ignitable waste is not placed in to the tank system.

d. Appropriate controls and practices exist to prevent overfilling, such as:
(22 CCR 66264.194(b),66270.16(i))
(40 CFR 264.194(b), 270.16(i))

1. Uncovered tanks have sufficient freeboard to prevent overtopping by waves/wind or 24-hour, 25-year storm - This section is not applicable because the tank is underground.

2. Any tank equipped with a continuous-feed mechanism has a means to stop inflow - The waste UST does not have a continuous feed mechanism. However, the tank is designed with high-level alarm systems. The alarm level will also be set to provide ample time and reserve storage capacity for the drum washer operator to stop flow into the waste solvent tank to prevent overfilling and spillage.

e. Waste analyses and trial tests are conducted whenever a different treatment process is used or a different waste is treated or stored in a tank
(22 CCR 66264.13, 66264.17, 66270.14(b)(19), 66270.16(j))
(40 CFR 264.13, 264.17, 270.16(j))

The waste analysis plan, as discussed in Part III, contains the waste analyses. Waste stored in the tanks are limited to spent parts washer solvent (either petroleum-based or aqueous-based). Only one material can be stored in the tank at a time and materials are not commingled at the facility or in the tank.

f. The following equipment is inspected daily:

1. Discharge and overfilling control equipment
(22 CCR 66264.195(a), 66270.14(b)(5))
(40 CFR 264.195(a), 270.14(b)(5))

The daily inspection (conducted each operating day) includes checks of high-level alarm systems and the

volume of waste held in the tanks.

2. Data from monitoring equipment
(22 CCR 66264.195(b)(2), 66270.14(b)(5))
(40 CFR 264.195(b)(2), 270.14(b)(5))

Data from the Veeder-Root system is generated and inspected each operating day.

3. Level of waste in the tank
(22 CCR 66264.195(b)(4), 66270.14(b)(3))

Daily inspections (conducted each operating day) include checks of the volume of waste held in the tank. Sudden deviation in the waste volumes is immediately investigated and the cause determined. If necessary, repairs and emergency control procedures are initiated immediately.

4. Aboveground portions of tank
(22 CCR 66264.195(b)(1), 66270.14(b)(5))
(40 CFR 264.195(b)(1), 270.14(b)(5))

All aboveground portions of the tank are inspected daily (conducted each operating day).

40. Tank construction materials
(22 CCR 66264.195(b)(3), 66270.14(b)(5))
(40 CFR 264.195(b)(3), 270.14(b)(5))

Not applicable for underground tanks.

40. Area surrounding tank and containment system
(22 CCR 66264.195(b)(3), 66270.14(b)(5))
(40 CFR 264.195(b)(3), 270.14(b)(3))

Not applicable for underground tanks.

g. Inspection of cathodic protection:
(22 CCR 66264.195, 66270.14(b)(5))
(40 CFR 264.195(c), 270.14(b)(5))

40. Two, 17-pound, magnesium anodes were installed during installation of tanks in September 1993 specified for each UST. The anodes were installed approximately three feet from the sidewalls of the excavation 10 feet below ground surface (see Appendix IV-3)**1. Initial six-month inspection –** The initial precision tank test was performed within the first

six months of the installation**2. Tri-annual Inspection –** Cathodic protection (CP) system testing has been performed every three years. The CP system was last inspected in October 2017**3. Bimonthly inspection of sources of impressed current– -** Not applicable.

h. Procedures for documenting tank system inspections (22 CCR 66264.195(d), 66270.14(b)(5)) (40 CFR 264.193(d), 270.14(b)(5))

Tank system inspections of accessible equipment are performed daily (conducted each operating day),) and are recorded in files at the facility (see Appendix VIII-1 for an example of daily inspection checklist). Annually, the entire monitoring system is tested and testing results are maintained at the facility.

i. Schedule and procedures for assessing tank condition: (22 CCR 66264.195(e), 66270.14(b)(5)) (40 CFR 270.14(b)(5))

Tanks are continually monitored by the tank monitoring system.

1. **Procedures for detecting cracks, leaks, corrosion, erosion, wall-thinning -** The tank is continuously monitored electronically, inspected daily, and measured daily for liquid levels.

2. **Procedures for emptying tank and inspecting interior -** Because the tank is below ground, personnel will not enter for inspection. When necessary, Safety-Kleen will retain an outside contractor for tank interior inspections.

3. **Rationale for frequency of tank inspections –** Tank is continually monitored. Leaks will be detected by the system immediately.

j. Ignitable or reactive waste is not placed in tank unless the waste is rendered non-reactive before or immediately after placement in the tank, the waste is protected from sources of reaction , or the tank is used for emergency only (22 CCR 666264.17, 66264.198(a), 66270.16(j)) (40 CFR 264.17, 264.198(a), 270.16(j))

This section is not applicable, because no reactive wastes are managed at the facility, and the ignitable spent parts washer solvent is only stored in a tank indicated for such use.

k. Describe procedures for handling the following wastes,

including the use of buffer zones:
(22 CCR 66264.17, 66264.198(b), 66264.199, 66270.16(j))
(40 CFR 264.17, 264.198(b), 264.199, 270.16(j))

1. **Incompatible wastes** - This section is not applicable, because the facility does not mange any permitted wastes that are incompatible with each other.

2. **Ignitable wastes -** The spent parts washer solvent is stored in a tank that meets the combustible classification Class II of the NFPA code. The tank is underground and complies with NFPA-30 setback requirements. Refer to Appendix IV-3 including "Underground Storage Tanks Installation Report, dated December 14, 1993, and prepared by Geraghty & Miller, Inc.", page 4 paragraph 3: *"The tank is located below grade and more than 1 foot away from any building or property line per NFPA 30 section 23.4.3. The tank was covered by 18 inches of backfill per NFPA 30 section 23.5.1.3 and section 23.5.2.2."*

3. **Reactive wastes -** This section is not applicable, because no reactive wastes are managed at this facility.

l. Incompatible wastes are not placed in the same tank unless uncontrolled reactions are prevented.
(22 CCR 66264.17, 66264.199, 66270.16(j))
(40 CFR 264.17, 264.199, 270.16(j))

This section is not applicable because either aqueous- or petroleum-based solvent is terminated at the facility.

m. Corrosion prevention devices
(22 CCR 66264.191(c)(3), 66264.192(b)(3) and (g), 66270.16)
(40 CFR 264.191(b)(3), 264.192(a)(3) and (f), 270.16)

Please refer to Appendix IV-3 ((Page 4 of the UST Installation Report prepared by Geraghty and Miller, Inc.).

13. Secondary containment for tanks

a. Describe containment system showing at least:
(for existing tanks see Items IV.8.12.f.g and i)

1. **Basic design parameters, dimensions, construction materials showing that the secondary containment system:**

Is constructed of or lined with materials compatible

with the wastes in the tank system
22 CCR 66264.193(b)(1) and (c)(1), 66270.16(g) and(l))
(40 CFR 264.193(b)(1) and (c)(1), 66270.16(g) and (l))

The tank is double-walled as discussed in Appendix IV-2.

b. Has sufficient strength and thickness to prevent failure owing to:
(22 CCR 66264.193(b)(1) and (c)(1), 66270.16(g) and (l))
(40 CFR 264.193(b)(1) and (c)(1), 270.16(g))

1. **Pressure gradients -** The design of the secondary containment system is of sufficient thickness and strength to withstand pressure of fluids in tanks. Tank design is detailed in Appendix IV-2.

2. **Physical contact with the waste -** The secondary containment system for the tank is constructed of carbon steel designed for this type of service. The materials of construction for primary and secondary components are compatible with the wastes to be stored. To further justify the compatibility of the stored liquid with the interior surfaces of the secondary tank's material, refer to the memo included in Appendix IV-2 (Memo from TI&CS to Safety-Kleen dated 4/12/2019).

3. **Climatic conditions -** Due to the local mild climate, failure of the containment system is not expected.

4. **Stress of daily operation (including vehicular traffic) -** The containment area for storage tank and a portion of the piping system is located beneath areas with truck traffic. Protection from vehicular traffic is provided by soil cover and a concrete slab. Based on manufacturer's recommendations (Appendix IV-2) and compliance with recommendations of applicable design codes, the protection provided for underground components appear to be adequate.

c. Is provided with a foundation or base which:
(22 CCR 66264.193(b)(1), (b)(2), (c)(2), 6270.16(g) and (l))
(40 CFR 264.193(b)(1), (b)(2), (c)(2), 270.16(g))

1. **Provides support to the secondary containment system -** The foundation provides sufficient support to the entire tank system, including secondary containment system, as detailed in Appendices IV-2 and IV-3.

2. **Is resistant to pressure gradients above and below the system -** Tank thickness and strength are sufficient to withstand pressure gradients. See section 13.b.1.

3. **Is capable of preventing failure due to settlement, compression or uplift -** The foundation of each storage tank, including secondary containment, is provided by compacted backfill and concrete deadman, as discussed in drawings in Appendices IV-2, and IV-3. Calculations presented in Appendix IV-2 indicate the foundation design provides satisfactory support, resistance to pressure gradients, and protection against settlement, compression, and uplift.

d. Has a leak-detection system designed and operated to detect failure of primary or secondary containment structure or any release of any waste or liquids in the secondary containment within 24 hours or earliest practicable time (include demonstration, if applicable)
(22 CCR 66264.193(b)(2) and (c)(3), 66270.16(g) and (l))(40 CFR 264.193(b)(2) and (c)(3), 270.16(g))

Continuous-monitor leak detection is used with the tank and piping. In accordance with clarified requirements (as listed in Volume 53 of the Federal Register, pages 34083 and 34084), the leak detection for the tank is designed to promptly detect any release from the primary tank into the outer shell, which serves as secondary containment. The tank is provided with a leak-sensing probe in the interstitial space between the primary and secondary tank walls to allow access to the bottom of the secondary containment tank for leak detection. An automated leak detection system using this probe in conjunction with a remote alarm system is the primary leak detection method. Additionally, a magnetostrictive in-tank sensing probe inserted through a nozzle welded to the (center) manway cover will automatically monitor liquid level in each tank and provide overfill protection. Liquid-detecting sensors are installed in each containment riser. A computerized control console in the warehouse provides a variety of reports from these sensors and probes by means of a liquid crystal display (LCD) or a thermal printer. This console activates a visual and audible alarm located near each tank if leakage in the interstitial space is detected or if the tank is in danger of being overfilled. Automated or daily visual inspection for liquids will allow for prompt detection of leaks.

Aboveground components of the tank systems will be available for daily visual inspections for leakage, structural distress of containment components, and presence of accumulated liquids.

e. Designed and operated to promote drainage and remove liquids resulting from leaks, spills, or precipitation (22 CCR 66264.193(b)(2) and (c)(4), 66270.16(g)

The computerized tank liquid monitoring system for the waste tank has the capabilities of detecting the presence of liquid in the interstitial space and containment risers (which are designed to be water-tight). The design drawings call for the tank to be sloped so that any liquid in the interstitial space will flow to one end to facilitate detection and removal. Drainage and removal of accumulated liquids from the interstitial space can be accomplished by pumping the liquids through the riser pipe. A sump pump can be used to remove the liquid from the sumps.

f. How spilled or leaked wastes and accumulated liquids will be analyzed and removed from secondary containment system within time to prevent overflow (but no more than 24 hours, unless demonstration for longer time is included) 22 CR 66264.193(b)(2) and (c)(4), 66270.16(g) and (l)) 40 FR 264.193(b)(2) and (c)(4), 270.16(g))

1. **A stinger vacuum pump will be used to remove liquids from the secondary containment system**. Any accumulate liquid in the secondary containment system will be classified based on the generator knowledge.

2. How collected materials will be handled in compliance with applicable regulatory requirements (22 CCR 66264.193(c)(4), 66270.16(g) and (l)) (40 CFR 264.193(c)(4), 270.16(g))

In the event of a release contained by the secondary containment system wastes collected will be manifested to a properly permitted treatment, storage and disposal facility.

3. Provisions for preventing or managing run-on (22 CCR 66264.193(c)(2), (c)(4), (i)(1), 66270.16(g)) (40 CFR 264.193(c)(2), (c)(4), 270.16(g))

Not applicable. Secondary containment is located below grade.

4. Layout of tanks within the secondary containment system (22 CCR 66270.14(b)(19))

Location of Tanks is shown on Figure I-4.

5. Provisions made for expansion or contraction during extreme temperatures and other stresses (22 CCR 66270.14(b)(19))

Local expansion or contraction due to temperature or extremes is not expected (refer to section on foundation design).

g. Describe the containment system used for ignitable or reactive wastes, and incompatible wastes showing at least:

1. Locations of tanks holding ignitable or reactive wastes and protective distances around each location (22 CCR 66264.198(b), 66270.14(b)(19)) (40 CFR 264.198(b))

Not applicable.

2. Locations of incompatible wastes and devices such as dikes, berms, walls, or distances or separation used to protect the wastes from each other (22 CCR 66270.14(b)(19))

Not applicable.

h. Containment for loading and unloading areas (22 CCR 66270.14(b)(19))

The R&F station is the loading area for the tanks. The R&F station is designed with adequate containment in case of a spill. Emergency containment equipment is also located in this area. The tanks are unloaded via vacuum tanker truck and temporary flexible hosing.

i Secondary containment for tanks must include one or more of the following devices: (22 CCR 66264.193(d) and (e), 66270.16(g)) (40 CFR 264.193(d) and (e), 270.16(g))

1. External liner system must be:

a. Designed or operated to contain precipitation from a 24-hour, 25-year storm; plus 10% of total volume of all tanks or 100 percent of the capacity of the largest tank within its boundary (whichever is greater)

b. Designed or operated to prevent run-on or infiltration of precipitation into the secondary containment system unless the collection system has sufficient excess capacity. In addition to that required in item a. above, to contain run-on and infiltration from a 25-year, 24-hour storm

c. Free of cracks or gaps

d. Designed and installed to surround the tank completely and to cover all surrounding earth likely to come in contact with the waste if the waste is released from the tank(s)

Not applicable. The tanks do not have an external liner system.

2. Vault system must be:

a. Designed or operated to contain precipitation from a 24-hour, 25-year storm; plus 10% of total volume of all tanks or 100% of all the capacity of the largest tank within its boundary (whichever is greater)

b. Designed or operated to prevent run-on or infiltration of precipitation into the secondary containment system unless the collection system has sufficient excess capacity. In addition to that required in item a. above, to contain run-on and infiltration from a 25-year, 24-hour storm

c. Constructed with chemical resistant water stops in place at all joints

d. Provided with an impermeable interior coating or lining that is compatible with the stored/treated waste and that will prevent migration of waste into the concrete

e. Provided with a means to protect against the formation of and ignition of vapors within the vault, if the waste being stored or treated is ignitable or reactive

f. Provided with an exterior moisture barrier or be otherwise designed or operated to prevent migration of moisture into the vault if the vault is subject to hydraulic pressure

Not applicable. The tanks are not installed in a vault

system.

3. Double-walled tank must be:

a. Designed as an integral structure so that any release from the inner tank is contained by the outer shell

As discussed in Appendix IV-3, each tank is designed as an integral structure, featuring an inner tank within an outer shell. A release from the inner tank will be contained by the outer shell.

b. Protected, if constructed of metal, from both corrosion of the primary tank interior and of the external surface of the outer shell

As is certified in Appendix IV-2, the waste solvent appears to be compatible with the carbon steel inner tank. The external surface of the outer shell of tank is constructed of fiberglass for corrosion protection.

c. Provided with a built-in continuous leak detection system capable of detecting a release within 24 hours, or at the earliest practicable time (if demonstration is included)

As discussed above, each tank is provided with a built-in, continuous leak detection system that is capable of detecting a release within 24 hours.

4. Equivalent device - Not applicable. No equivalent device will be used.

a. Designed and operated to provide an equivalent level of protection (use checklist items from IV.B.13.d.1.2 and/or 3 above) -

b. Approved by Department -

j. Certification
(22 CCR 66264.191(f), 66264.192(b), 66270.14(b)(19), 66270.16(g))
(40 CFR 264.192(a), 270.16(g))

1. Statement certifying that an engineer registered in California has approved the design and construction of each secondary containment area and structures for the intended uses

All certifications are located in Appendices IV-1, and IV-2.

2. Name and registration number of the engineer

a) Engineers Qualifications:
Certification of containments in storage areas
Name: John W. Matthews
Registration Number: C64105
Engineering Discipline: Chemical
Date of Expiration of Engineer's Registration: 09/30/2018

b) Engineers Qualifications:
Certification of waste UST
Name: Dr. Joseph M. Plecnik
Registration Number: C26354
Date of Expiration of Engineer's Registration: 03/31/2020

k. For existing aboveground tanks systems in place for which the owner/operator wishes to seek a variance from the secondary containment requirements, the owner/operator must provide one of the following:
(22 CCR 66264.193(g), (g)(1), (g)(2), (h), 66270.16(g))
(40 CFR 264.193(g), (g)(1), (g)(2), (h), 270.16(h))

Not applicable.

1. A description of the steps necessary to conduct one of the demonstrations described in Items 2 and 3 below, and a timetable for completing each step.

2. A demonstration (for a variance) that alternative design and operating practices, with location, will prevent migration of wastes/constituents into groundwater or surface water as effectively as secondary containment, considering:

a. Nature and quantity of wastes

b. Proposed alternative design

c. Proposed alternative operation

d. Hydrogeologic setting, including thickness of soils between tank system and groundwater

e. All other factors that would influence quality and mobility of constituents, and potential for them to migrate to groundwater or surface water

3. A demonstration (for a variance) that, in the event of release, that does migrate to groundwater or surface water, no substantial present or potential hazard will be posed to human health or the environment, considering:

Not applicable. No variance is applied for.

a. Potential adverse effects on groundwater, surface water, and land quality, considering:

1. Physical and chemical waste characteristics, including migration potential

2. Hydrogeological characteristics of facility and area

3. Potential for health risks due to human exposure too waste constituents

4. Potential for damage to wildlife, crops, vegetation, and physical structures due to exposure to waste constituents

5. Persistence and permanence of potential adverse effects

b. Potential adverse effects of a release on groundwater quality, considering:

1. Quantity and quality of groundwater, and direction of groundwater flow

2. Proximity and withdrawal rates of groundwater uses

3. Current and future uses of groundwater in area

4. Existing quality of groundwater, including other contamination sources and cumulative impact

c. Potential adverse effects of a release on surface water quality, considering:

1. Quantity and quality of groundwater, and direction of groundwater flow

2. **Patterns of rainfall**

3. **Proximity of tank system to surface water**

4. **Current and future uses of surface waters in area, and any surface water quality standards**

5. **Existing quality of surface water, including other contamination sources and cumulative impact**

d. **Potential adverse effects of a release on land surrounding tank system, considering:**

1. **Regional rainfall patterns**

2. **Current and future land uses**

l. **For tank systems for which a variance from secondary containment has been granted under 66264.193(g), describe procedures for responding to releases from primary tank system:**
(22 CCR 66264.193(g)(3) and (g)(4), 66270.14(b)(10))
(40 CFR 264.193(g)(3) and (g)(4))

Not applicable. No variance has been applied for.

1. **Release has NOT migrated beyond zone of engineering control - procedures to comply with 66264.193(g)(3)**

2. **Release has migrated beyond zone of engineering control - procedures to comply with 66264.193(g)(4)**

m. **Ancillary equipment must be provided with secondary containment, except for:**
(22 CCR66264.193(f), 66270.16(d), and (g))
(40 CFR 264.193(f), 270.16(g))

1. **Aboveground piping that are visually inspected for leaks on a daily basis -** All aboveground piping is inspected for leaks each operating day.

2. **Welded flanges, welded joints, and welded connections that are visually inspected for leaks on a daily basis -** Aboveground portions of the piping, which have welded connections are accessible for inspection each operating day.

3. **Sealless or magnetic coupling pumps that are visually inspected for leaks on a daily basis -** This section is not applicable because the facility has no such pumps.

3. **Pressurized aboveground piping system with automatic shut-off devices that are visually inspected for leaks on a daily basis -** This section is not applicable.

4. **Location of double•-walled underground piping. (title 22, sections 66264.193(f) and 66270.1B(g))-** Location of the USTs are shown on Figure I-4. Piping &instrumentation Diagram (P&ID) is included on Figure IV-5.

n. **For existing tank systems that do not, and are not yet required to, have secondary containment meeting the requirements of 66264.193** The items in this section are not applicable because existing tank systems have secondary containment.

1. **An implementation schedule showing how the facility will meet the secondary containment requirements by the applicable deadlines specified in 66264.193(a) (22 CCR 66264.193(a), 66270.16(g)) (40 CFR 264.193(a), 270.16(g))**

2. **Tank system must have a secondary containment system which at a minimum is:(22 CCR 66264.193(i)(l), 66270.16(g))**

a. **Provided with a foundation or base which (22 CCR 66264.193(c)(2), 66270.16(g) (l))**

1. **Provides support to the secondary containment system**

2. **Is resistant to pressure gradients above and below the system**

3. **Is capable of preventing failure due to settlement, compression, or uplift**

4. **Is free of cracks of gaps and sufficiently impervious to contain leaks, spills, and accumulated precipitation until the collected material is detected and removed**

b. **Designed and operated to promote drainage and remove liquids resulting from leaks, spills, or**

precipitation
(22 CCR 66264.193(c)(4), 66270.16(g) and (l))

c. Designed or operated to contain precipitation from a 24-hour, 25-year storm, plus 10% of total volume of all tanks or 100% of the capacity of the largest tank within its boundary (whichever is greater)

d. Designed or operated to prevent run-on or infiltration of precipitation into the secondary containment system unless the collection system has sufficient excess capacity, in addition to that required in Item a. above, to contain run-on and infiltration from a 25-year, 24-hour storm

3. For non-enterable underground tanks, an annual leak test (per 66264.191(c)(5)), or other annual integrity test approved by Department
(22 CCR 66264.193(i)(2),, 66270.16(g))
(40 CFR 264.193(i)(1))

4. For other than non-enterable underground tanks
(22 CCR 66264.193(i)(3), 66270.16(g))
(40 CFR 264.193(i)(2))

a. Annual leak test, OR -

b. Schedule and procedures for assessing tank condition:

1. Procedures for detecting cracks, leaks, corrosion, erosion, wall-thinning
2. Procedures for emptying tank and inspecting interior

3. Rationale for frequency of tank inspections

5. For ancillary equipment, an annual leak test or other integrity assessment approved by Department -

6. Maintain record of results of assessments conducted pursuant to Items 3, 4, and 5 above -

14. Treatment in tanks
(22 CCR 66270.14(b)(19))

Not applicable. There is no treatment in tanks. The only treatment conducted at the facility is rinsing containers in the R&F station, which is regulated as a miscellaneous unit described below.

15. Return and Fill (R&F) Station - Miscellaneous Unit

a. Processes and equipment

1. **Physical characteristics of treatment** R&F station is located north of the main office building. The area includes two drum washers, and an epoxy-lined concrete containment area, and is used for management of part washer solvent containers (either aqueous- or petroleum-based solvent). Spent parts washer solvent is poured into a nominal 12,000-gallon UST via two drum washer units located in this area. Parts washer solvent is transferred from the UST via a tanker truck to a recycle center or other approved and permitted TSDF.

   Drum washer units have screens to remove large pieces of foreign matter and some smaller materials. In addition, some fine sediments, referred to as dumpster bottom sediment, can settle out in the drum washer sumps. Also, there is an in-line basket strainer located on the negative (suction) side of the waste solvent transfer sump. In addition, the drum washers are equipped to wash the emptied containers. A container is placed in the drum washer, and a stream of spent solvent is pumped into the container as it is rotated. Automatic brushes remove any waste residue that may remain in the container. After washing is completed, the container is drained and, if necessary, given a final rise, which is also drained into the drum washer. The emptied containers of solvent are then refilled with clean product. This process renders the containers "empty" as defined by standards of the federal RCRA regulations (40 CFR 261.7(b)) and state regulations as found at 22 CCR 66261.7(b). Design specifications and drawings for these units are presented in Appendix IV-3.

2. **Chemical reactions and reaction efficiencies -** Not applicable. No chemical reaction occurs in tanks.

3. **Construction materials -** The drum washers are fabricated steel vessels. The sides, bottom, and hood of each unit are HRCS plate, welded to be watertight (and leak proof). The units are mounted on a low structural steel framework and are surrounded by a grating platform. The area has secondary containment over a concrete slab, which slopes to the drum washer installation area. This area is constructed with a steel liner. Grounding wires

prevent buildup of static charge during operation.

4. **Dimensions -** Each drum washer itself is approximately 5 feet wide by 3 feet deep, with a front height of approximately 40 inches and a nominal storage capacity of 155 gallons.

5. **Detailed plans and descriptions showing**

a. **Location –** See Figure I-4.

b. **Design –** See Figure IV-4B

c. **Construction -** Fabricated steel

d. **Operation –**The cleaning of the screens and removal of dumpster sediment are waste generation processes from the maintenance of the miscellaneous equipment. This sediment is containerized, manifested as hazardous waste, and disposed of off-site properly.

e. **Maintenance -** Maintenance of the screens is performed by removing the accumulated sediment. The walkway and platform are cleaned as needed.

f. **Inspection -** The drum washers are inspected at least each operating day for leakage and accumulation of sludge and foreign materials on the screens.

6. **Prevention of releases to groundwater or subsurface environment**

Each drum washer unit is positioned over steel that provides secondary containment and prevents seepage into the ground. Two steel containment pans with nominal volumes of 25 cubic feet are placed beneath each drum washer. See Figure IV-3 for a diagram of the secondary containment pan.

7. **Prevention of releases to surface water, wetlands, or surface soils**

Releases of hazardous wastes to surface water, wetlands, and soils are prevented at the R&F station as described below.

This area is equipped with secondary containment as described above. In addition, waste containers are

unloaded from the route trucks in the warehouse, which has a 2-inch concrete berm surrounding the area to provide spill containment.

8. Prevention of releases to the air

The unit hood of the drum washers remains closed except when an operator is emptying a container of spent parts washer solvent into the unit or is performing maintenance or inspection activities.

Currently only aqueous-based solvent is handled in the R&F station. If petroleum-based solvent will be handled in the unit in the future, South Coast Air Quality Management District will be consulted, and proper permits will be obtained. In addition, the existing roll-up lid of the drum washer units will be replaced with a sliding lid to prevent any volatile organic emissions.

Note that the waste UST is exempted from air permitting Per SCAQMD Rule 219(m)(3), reading as follows: *"Equipment used exclusively for the transfer of less than 75,700 liters (20,000 gallons) per day of unheated VOC containing materials, with an initial boiling point of 150 oC (302 oF) or greater, or with an organic vapor pressure of 5 mm Hg (0.1 psi) absolute or less at 21.1 oC (70 oF)."*

b. Detailed assessments and maps for the region surrounding the site, which include:

1. Hydrologic assessments – Not Applicable (No Tank Treatment)

2. Geologic assessments– Not Applicable (No Tank Treatment)

3. Meteorological assessments– Not Applicable (No Tank Treatment)

4. Land-use maps– Not Applicable (No Tank Treatment)

c. Information on the potential pathways of exposure of humans or environmental receptors to hazardous waste or hazardous constituents, and information on the potential magnitude and nature of such exposures

Quantitative health risk assessments, approved by the DTSC, have been performed on similar Safety-Kleen facilities in

California. All of the assessments found that Safety-Kleen operations are not expected to produce any negative effects.

d. For any treatment unit, a report on a demonstration of the effectiveness of the treatment based on laboratory or field data

This section is not applicable. The drum washer units only provide passive physical separation.

e. Examples of treatment processes include:

1. Chemical treatment - Not applicable. No chemical treatment is performed.

a. Acid/chemical stripping - Not applicable.

b. Neutralization - Not applicable.

c. Oxidation/reduction - Not applicable.

d. pH modification - Not applicable.

e. Precipitation - Not applicable.

f. Other - Not applicable.

2. Physical treatment

a. Dewatering/drying - Not applicable

b. Distillation/air stripping - Not applicable.

c. Evaporation - Not applicable.

d. Filtration - Not applicable.

e. Fixation/stabilization - Not applicable.

f. Separation - As described in Section IV.B.14.a.1.

g. Sizing/blending - Not applicable.

h. Thickening - Not applicable.

i. Other - Not applicable.

3. Biological treatment - Not applicable. No biological

treatment is performed.

a. **Aerobic decomposition -** Not applicable.

b. **Anaerobic digestion -** Not applicable

c. **Microbial biodegradation -** Not applicable.

d. **Other -** Not applicable

FIGURE IV-1

CONTAINER CONFIGURASTIONS IN DRUM STORAGE AREAS

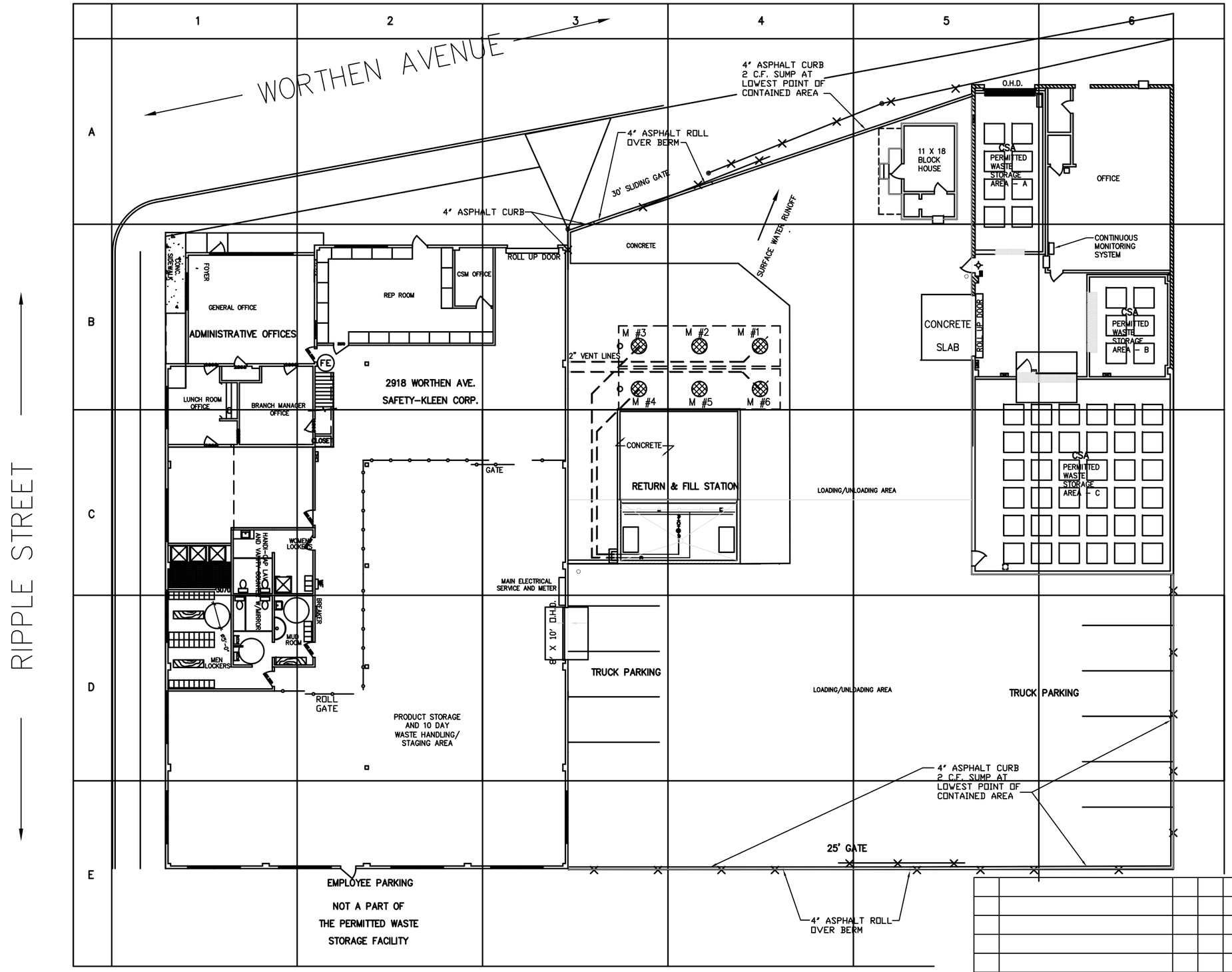

FIGURE IV-1

PROPRIETARY STATEMENT

THIS DRAWING IS THE EXCLUSIVE PROPERTY OF SAFETY-KLEEN SYSTEMS, INC. AND IS PROPRIETARY AND CONFIDENTIAL INFORMATION. THIS DRAWING AND THE INFORMATION CONTAINED THEREIN MUST NOT BE DUPLICATED, USED, DIVULGED, REPRODUCED, COPIED, DISCLOSED OR APPROPRIATED IN WHOLE OR IN PART FOR ANY PURPOSE OTHER THAT AS EXPRESSLY AUTHORIZED BY SAFETY-KLEEN SYSTEMS, INC. THIS DRAWING MUST BE RETURNED PROMPTLY UPON REQUEST.

TITLE

CONTAINER CONFIGURATION IN DRUM STORAGE AREAS

NO.	DESCRIPTION	BY	CHK	APPR	DATE
A	ADD CONTINUOUS MONITORING SYSTEM	JEK	NT	NT	022219
01	REVISED FOR PERMIT	JEK	NT	NT	072518
00	NEW ISSUE FOR PERMIT	JEK	NT	NT	071018

REVISIONS

SAFETY-KLEEN SYSTEMS, INC.
2600 N. CENT. EXPRESSWAY STE 400 RICHARDSON, TX. 75080
PHONE 800-669-5740

SCALE	BY	CHKD	P.E. APPR	OP. APPR	DATE
1"=10'	JEK	NT	NT	NT	7/10/18

SERVICE CENTER BRANCH AT: LOS ANGELES, CA

STD-DWG-REV NO.: 7116-SP00-009

FIGURE IV-2

RETURN AND FILL (R&F) Station PIPING SCHEMATIC

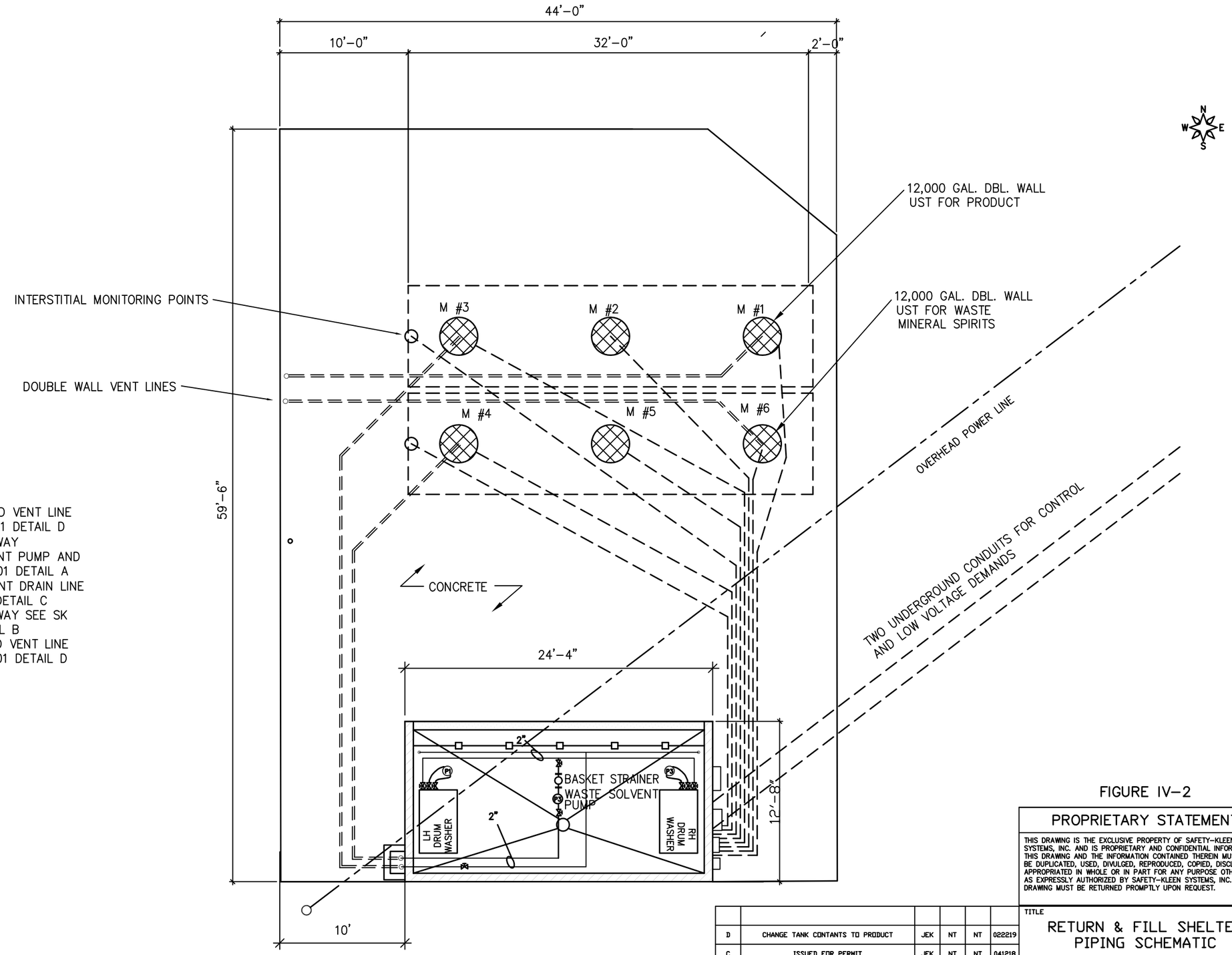

MANWAY SCHEDULE
M 1 : FILL PIPE AND VENT LINE
SEE SK STD 1011-01 DETAIL D
M 2: ACCESS MANWAY
M 3: CLEAN SOLVENT PUMP AND
HLA SK STD 1011-01 DETAIL A
M 4: WASTE SOLVENT DRAIN LINE
SEE STD 1010-01 DETAIL C
M 5: ACCESS MANWAY SEE SK
STD 1010-01 DETAIL B
M 6: FILL PIPE AND VENT LINE
SEE SK STD 1011-01 DETAIL D

FIGURE IV-2

PROPRIETARY STATEMENT

THIS DRAWING IS THE EXCLUSIVE PROPERTY OF SAFETY-KLEEN SYSTEMS, INC. AND IS PROPRIETARY AND CONFIDENTIAL INFORMATION. THIS DRAWING AND THE INFORMATION CONTAINED THEREIN MUST NOT BE DUPLICATED, USED, DIVULGED, REPRODUCED, COPIED, DISCLOSED OR APPROPRIATED IN WHOLE OR IN PART FOR ANY PURPOSE OTHER THAT AS EXPRESSLY AUTHORIZED BY SAFETY-KLEEN SYSTEMS, INC. THIS DRAWING MUST BE RETURNED PROMPTLY UPON REQUEST.

NO.	DESCRIPTION	BY	CHK	APPR	DATE
D	CHANGE TANK CONTANTS TO PRODUCT	JEK	NT	NT	022219
C	ISSUED FOR PERMIT	JEK	NT	NT	041218
B	REVISE NOTES	JEK	NT	NT	061708
A	ADD FIGURE NUMBER/REVISE NOTES	JEK	NT	NT	052808
0	REVISE TO CURRENT CONDITIONS	JEK	MC	MC	021408

REVISIONS

TITLE
RETURN & FILL SHELTER
PIPING SCHEMATIC

SAFETY-KLEEN SYSTEMS, INC.
2600 N. CENT. EXPRESSWAY STE 400 RICHARDSON, TX. 75080
PHONE 800-669-5740

SCALE	BY	CHKD	P.E. APPR	OP. APPR	DATE
1/4"=1'	WEY	-	-	-	4-20-93

SERVICE CENTER BRANCH AT
LOS ANGELES, CA

STD-DWG-REV NO.
7116-4100-100-D

FIGURE IV-3

R&F STATION PLAN AND DETAILS

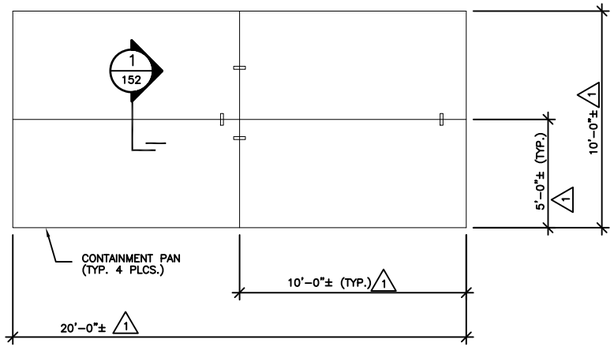

SECONDARY CONTAINMENT PAN LAYOUT
TYPICAL CONSTRUCTION
NO SCALE

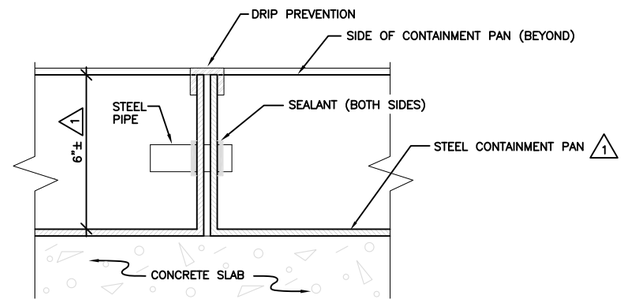

1 / 152 CONTAINMENT PAN SECTION
TYPICAL CONSTRUCTION
NO SCALE

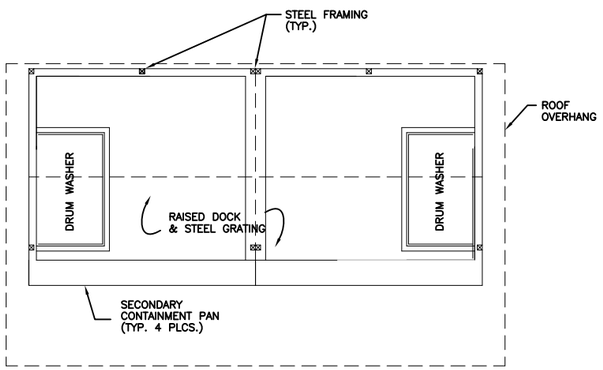

FLOOR PLAN
TYPICAL CONSTRUCTION
NO SCALE

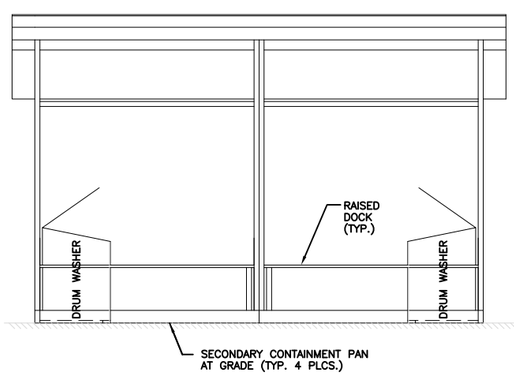

FRONT ELEVATION
TYPICAL CONSTRUCTION
NO SCALE

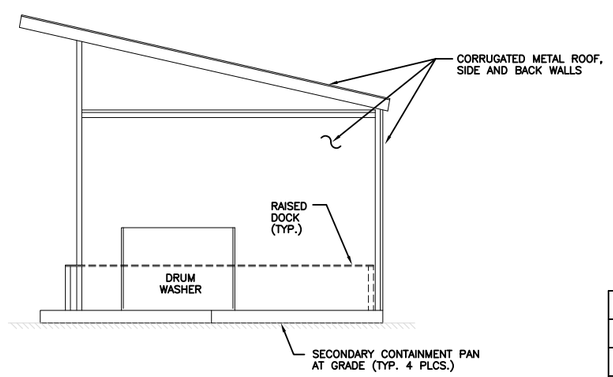

SIDE ELEVATION
TYPICAL CONSTRUCTION
NO SCALE

FIGURE IV-3

GENERAL NOTES

1. INDICATES AS BUILT MEASUREMENT OR FIELD VERIFICATION OF EXISTING CONDITION ON 8-11-93.

2. DETAILS INDICATED AS TYPICAL CONSTRUCTION IDENTIFY TYPICAL SAFETY-KLEEN CONSTRUCTION PRACTICES WHICH WERE NOT FIELD VERIFIED UNLESS SPECIFICALLY INDICATED.

PROPRIETARY STATEMENT

THIS DRAWING IS THE EXCLUSIVE PROPERTY OF SAFETY-KLEEN SYSTEMS, INC. AND IS PROPRIETARY AND CONFIDENTIAL INFORMATION. THIS DRAWING AND THE INFORMATION CONTAINED THEREIN MUST NOT BE DUPLICATED, USED, DIVULGED, REPRODUCED, COPIED, DISCLOSED OR APPROPRIATED IN WHOLE OR IN PART FOR ANY PURPOSE OTHER THAT AS EXPRESSLY AUTHORIZED BY SAFETY-KLEEN SYSTEMS, INC. THIS DRAWING MUST BE RETURNED PROMPTLY UPON REQUEST.

NO.	DESCRIPTION	BY	CHK	APPR	DATE
C	ISSUED FOR PERMIT	JEK	NT	NT	041218
0	ISSUED FOR REVIEW	JEK	MC	MC	110893

REVISIONS

TITLE
RETURN-AND-FILL STATION
PLAN AND DETAILS

SAFETY-KLEEN SYSTEMS, INC.
2600 N. CENT. EXPRESSWAY STE 400 RICHARDSON, TX. 75080
PHONE 800-669-5740

SCALE	BY	CHKD	APPROVED	OPERATIONS	DATE
AS SHOWN	CWM	GPM			8-11-93

SERVICE CENTER LOCATION	SC-DWG. NO.-REV. NO.	SHEET NO.
LOS ANGELES, CA.	7116-5600-600	

8-11-93 5:00 pm STD-1520 .DWG STANDARD

FIGURE IV-4A

R&F STATION AIR TAG INFORMATION

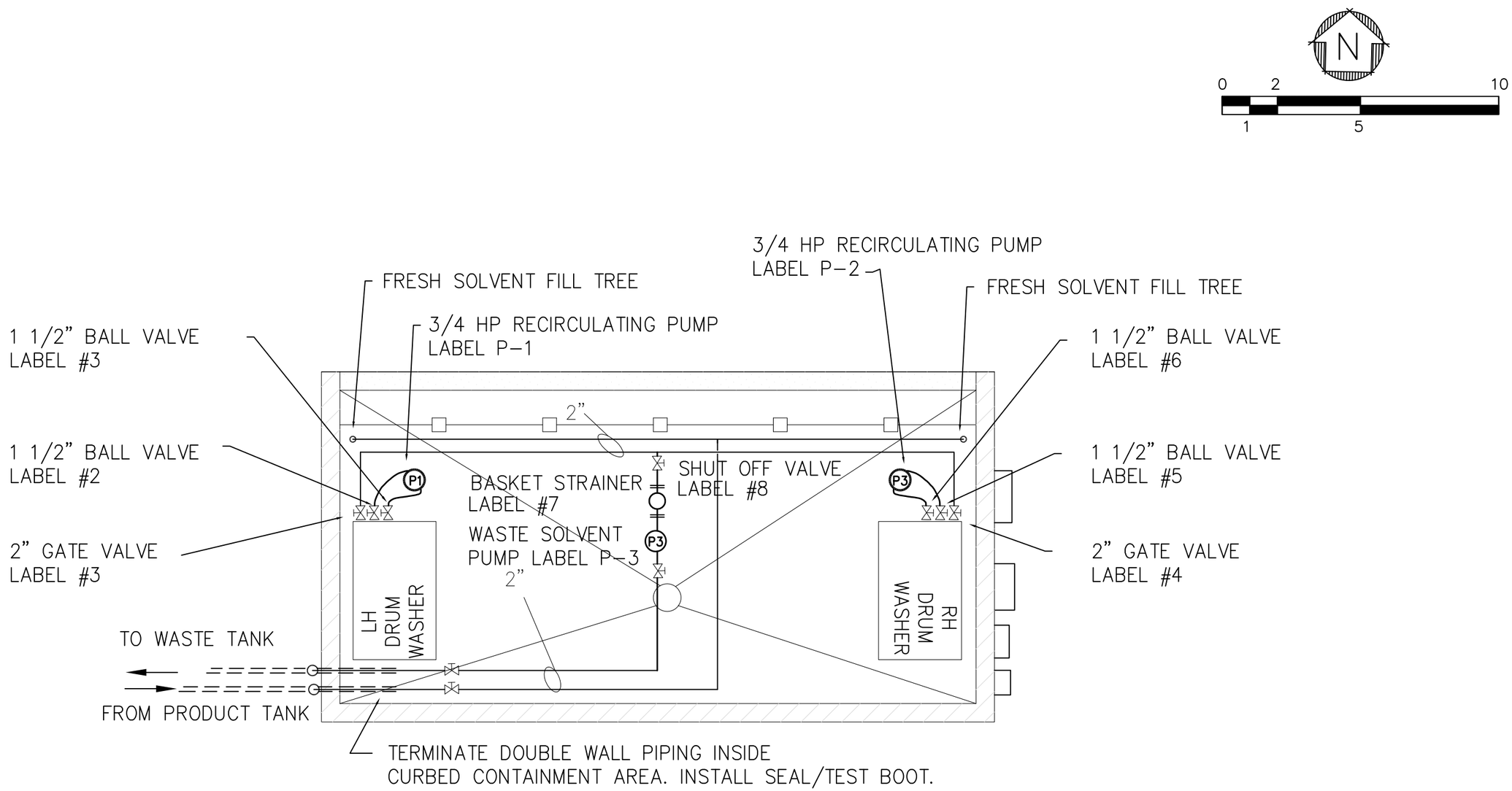

FIGURE IV-4A

PROPRIETARY STATEMENT

THIS DRAWING IS THE EXCLUSIVE PROPERTY OF SAFETY-KLEEN SYSTEMS, INC. AND IS PROPRIETARY AND CONFIDENTIAL INFORMATION. THIS DRAWING AND THE INFORMATION CONTAINED THEREIN MUST NOT BE DUPLICATED, USED, DIVULGED, REPRODUCED, COPIED, DISCLOSED OR APPROPRIATED IN WHOLE OR IN PART FOR ANY PURPOSE OTHER THAT AS EXPRESSLY AUTHORIZED BY SAFETY-KLEEN SYSTEMS, INC. THIS DRAWING MUST BE RETURNED PROMPTLY UPON REQUEST.

NO.	DESCRIPTION	BY	CHK	APPR	DATE
2	ISSUED FOR PERMIT	JEK	NT	NT	11-20-93
1	REVISE PIPE LAYOUT TO AS-BUILT				11-20-93

REVISIONS

TITLE

RETURN & FILL SHELTER
AIR TAG INFORMATION

SAFETY-KLEEN SYSTEMS, INC.
2600 N. CENT. EXPRESSWAY STE 400 RICHARDSON, TX. 75080
PHONE 800-669-5740

SCALE	BY	CHKD	P.E. APPR	OP. APPR	DATE
1/2"=1'	WEY	-	-	-	4-20-93

SERVICE CENTER BRANCH AT
LOS ANGELES, CA

STD-DWG-REV NO.
7116-4100-300

FIGURE IV-4B

DRUM WASHER/DUMPSTER ISOMETRIC

DUMPSTER/BARREL WASHER ASSY – DETAIL 1

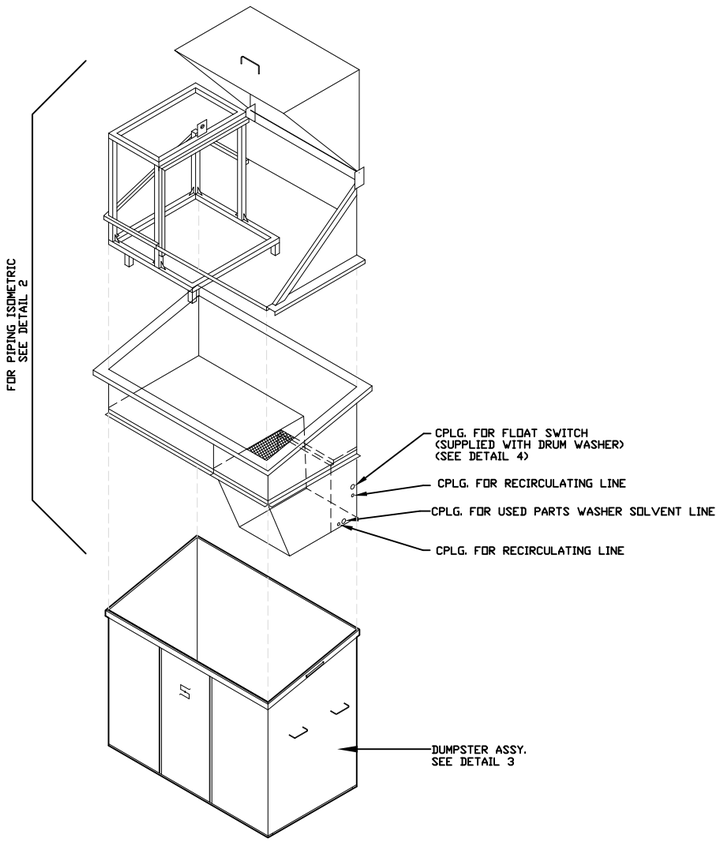

DUMPSTER ASSY. – DETAIL 3

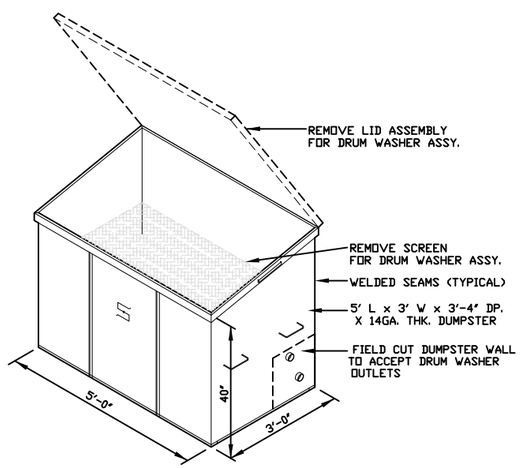

BARREL WASHER PIPING ISOMETRIC – DETAIL 2

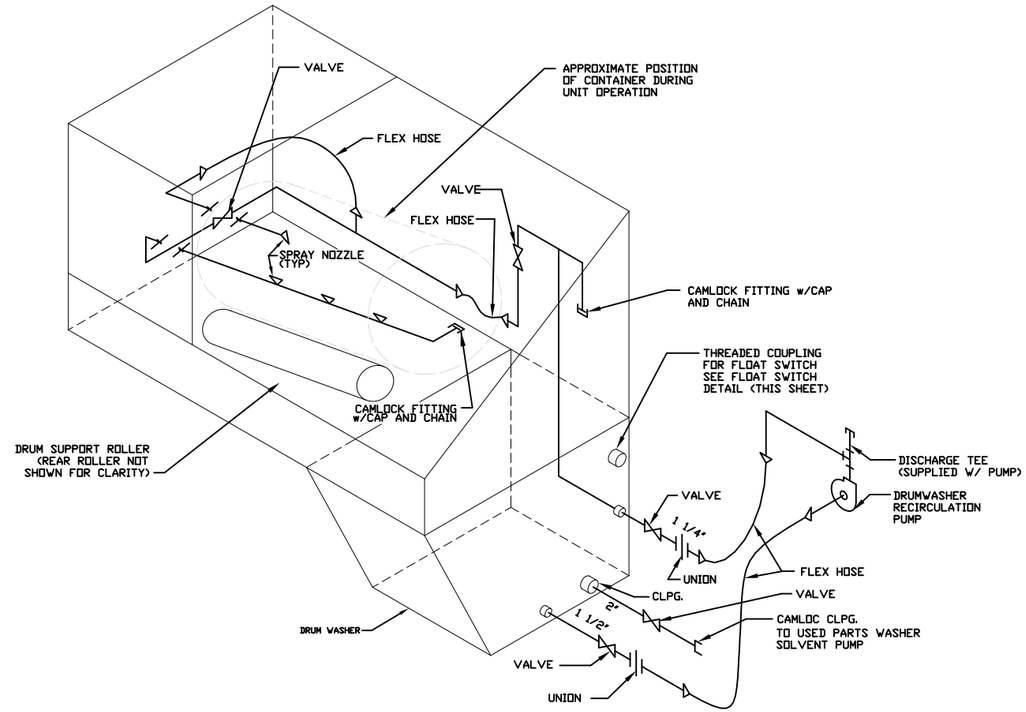

FLOAT SWITCH INSTALLATION – DETAIL 4

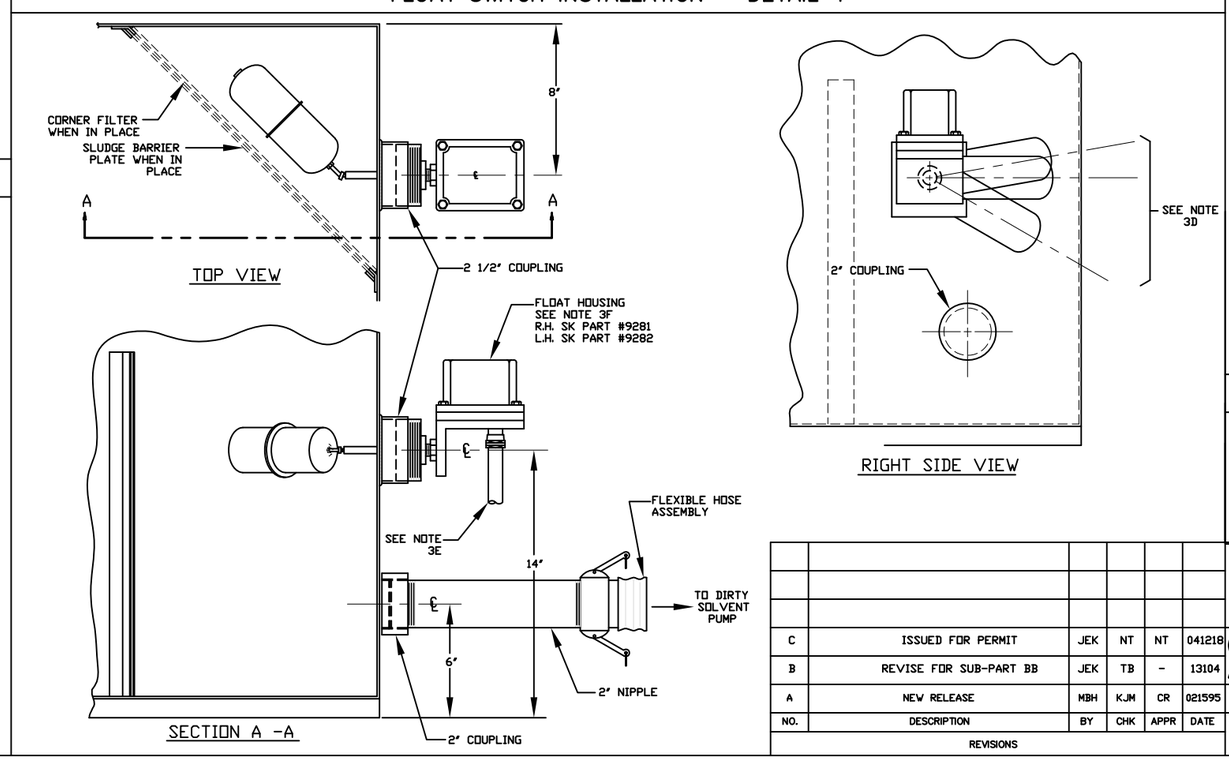

GENERAL NOTES

1.) THE BARREL WASHER UNIT AND DUMPSTER ARE SUPPLIED BY SAFETY-KLEEN CORP. AND COMBINED BY CONTRACTOR. RECIRCULATING PUMP, AND VALVES FOR DRUM WASHER ARE SUPPLIED BY SAFETY-KLEEN CORP. AND INSTALLED WITH CONTRACTOR SUPPLIED PIPE UNIONS AND HOSES.

9. ALL ITEMS WITH SAFETY-KLEEN PART NO. REFERENCES WILL BE SUPPLIED TO CONTRACTOR.

3. FLOAT SWITCH INSTALLATION INSTRUCTIONS

A. TAKE FLOAT SWITCH AND WRAP CLOCKWISE WITH 2 TEFLON WINDS OF TAPE AND INSTALL INTO 2 1/2" COUPLING ON OUTSIDE OF DUMPSTER

B. TAKE FLOAT AND THREAD IT INTO THE FLOAT SWITCH FROM THE INSIDE SHAFT OF THE DUMPSTER AND TIGHTEN SECURELY.

C. RELEASE SHIPPING BRACKET BY REMOVING SCREW AND DISCARDING BRACKET.

D. FLOAT TRAVEL SETTING ADJUSTMENTS CAN BE ACCOMPLISHED BY LOOSENING ADJUSTMENT SCREWS. THE FLOAT TRAVEL ARC SHOULD BE SET AT 10° TRAVEL UP AND 30° TRAVEL DOWN. (SEE CALIBRATION ON DIAL). SEE RIGHT SIDE VIEW.

E. FLOAT SWITCH SHOULD BE WIRED UP ACCORDING TO MFGRS. SPECS AND IN COMPLIANCE WITH ANY LOCAL CODES. (USE RIGID CONDUIT THROUGHOUT).

F. FLOAT SWITCH TO BE INSTALLED ON SAME SIDE OF DUMPSTER AS DRAIN LINE. INSTALLATION SHOWN IS FOR RIGHT HAND SIDE OF DUMPSTER. FLOAT SWITCH IS SQUARE D CLASS 9037 HR - 3 (RIGHT HAND) OR HR - 4 (LEFT HAND).

G. RE-ADJUST FLOAT STOPS TO THOSE SHOWN ON RIGHT SIDE VIEW.

H. WHEN DUMPSTER DOES NOT HAVE A 2 1/2" COUPLING, ONE SHOULD BE ON (LIQUID TIGHT) TO DIMENSIONS SHOWN.

FIGURE IV-4B

PROPRIETARY STATEMENT

THIS DRAWING IS THE EXCLUSIVE PROPERTY OF SAFETY-KLEEN CORP. AND IS PROPRIETARY AND CONFIDENTIAL INFORMATION. THIS DRAWING AND THE INFORMATION CONTAINED THEREIN MUST NOT BE DUPLICATED, USED, DIVULGED, REPRODUCED, COPIED, DISCLOSED OR APPROPRIATED IN WHOLE OR IN PART FOR ANY PURPOSE OTHER THAN AS EXPRESSLY AUTHORIZED BY SAFETY-KLEEN CORP. THIS DRAWING MUST BE RETURNED PROMPTLY UPON REQUEST.

NO.	DESCRIPTION	BY	CHK	APPR	DATE
C	ISSUED FOR PERMIT	JEK	NT	NT	041218
B	REVISE FOR SUB-PART BB	JEK	TB	-	13104
A	NEW RELEASE	MBH	KJM	CR	021595

REVISIONS

TITLE

DRUM WASHER/DUMPSTER ISOMETRIC

SAFETY-KLEEN SYSTEMS, INC.
2600 N. CENT. EXPRESSWAY STE 400 RICHARDSON, TX. 75080
PHONE 800-669-5740

SCALE	BY	CHKD	APPROVED	OPERATIONS	DATE
NONE	MBH	KJM	CR		02-08-95

SERVICE CENTER LOCATION	SC-DWG NUMBER	REV. NO.
LOS ANGELES, CA.	7116-5600-299	C

051094

FIGURE IV-5

TANK SYSTEM PIPING AND INSTRUMENTATION (P&ID) DIAGRAM

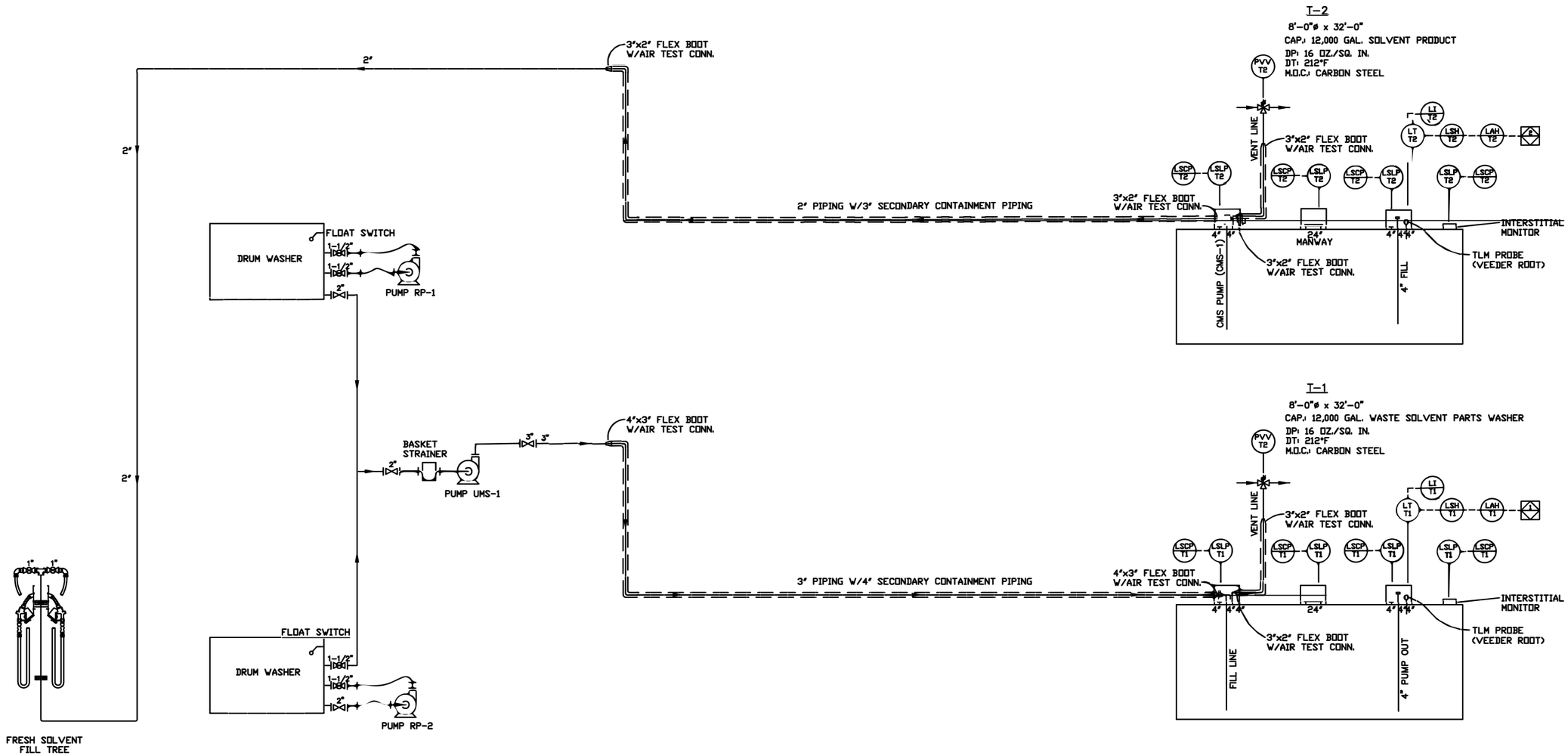

CMS-1
SP TRANSFER PUMP

RED JACKET BIG FLO	
30 USGPM	50 FT. TDH
2 HP	1750 RPM
0.79 S.G.	70°F

RP-1
RECIRCULATION PUMP

PRICE XT100	
60 USGPM	50 FT. TDH
1.5 HP	3450 RPM
0.82 S.G.	68°F

RP-2
RECIRCULATION PUMP

PRICE XT100	
60 USGPM	50 FT. TDH
1.5 HP	3450 RPM
0.82 S.G.	68°F

UMS-1
WSPW TRANSFER PUMP

MARLO 1-1/2HR49EC	
50 USGPM	50 FT. TDH
1.5 HP	3450 RPM
0.82 S.G.	68°F

FIGURE IV-5

LEGEND

LSLP	LEAK SENSOR, LIQUID PROBE
LSCP	LEAK SENSOR CONTROL PANEL
LT	LEVEL TRANSMITTER
LI	LEVEL INDICATOR
LSH	LEVEL SWITCH HIGH
LAH	LEVEL ALARM HIGH
PVV	PRESSURE VACUUM VENT
IM	INTERSTITIAL MONITOR
IMP	INTERSTITIAL MONITOR PANEL
SP	SOLVENT PRODUCT
WSPW	WASTE SOLVENT PARTS WASHER

2" FLANGED GATE VALVE
3" FLANGED BALL VALVE
1/2" BALL VALVE
PUMP
FLOW ARROW
FLEX PIPING
CONTAINMENT PIPING

NOTES

1. TYPICAL HAND SWITCH INITIATED PUMP OPERATION. PSL WILL STOP PUMP ON LOW PRESSURE. PUMP RESTARTED MANUALLY FROM ANY HAND SWITCH.

INTERLOCK NOTES:

1. PUMP UMS-1 SHUT DOWN ON TANK NO. T-1 HIGH LEVELS & PUMP PSL'S.
2. PUMP CMS-1 START/SHUT DOWN BY HAND OPERATED SWITCH AT PANEL.

NO.	DESCRIPTION	BY	CHK	APPR	DATE
A	ISSUED FOR PERMIT	JEK	NT	NT	022719

REVISIONS

PROPRIETARY STATEMENT

THIS DRAWING IS THE EXCLUSIVE PROPERTY OF SAFETY-KLEEN SYSTEMS, INC. AND IS PROPRIETARY AND CONFIDENTIAL INFORMATION. THIS DRAWING AND THE INFORMATION CONTAINED THEREIN MUST NOT BE DUPLICATED, USED, DIVULGED, REPRODUCED, COPIED, DISCLOSED OR APPROPRIATED IN WHOLE OR IN PART FOR ANY PURPOSE OTHER THAT AS EXPRESSLY AUTHORIZED BY SAFETY-KLEEN SYSTEMS, INC. THIS DRAWING MUST BE RETURNED PROMPTLY UPON REQUEST.

TITLE
TANK SYSTEM P & ID

SAFETY-KLEEN SYSTEMS, INC.
2800 N. CENT. EXPRESSWAY STE 400 RICHARDSON, TX. 75080
PHONE 800-669-5740

SCALE	BY	CHKD	P.E. APPR	DP. APPR	DATE
NONE	JEK	NT	NT	NT	2/27/19

BRANCH LOCATION: LAOS ANGELES, CA.
STD-DWG-REV NO.: 7116-4100-110

APENDIX IV-1

CONTAINER STORAGE AREAS CERTIFICATION

(CALCULATIONS OF CONTAINMENT CAPACITY)

RCRA CONTAINER STORAGE AREA CERTIFICATION
SAFETY-KLEEN SYSTEMS, INC. – LOS ANGELES
2918 WORTHEN AVENUE
LOS ANGELES, CALIFORNIA

PREPARED FOR:
Safety-Kleen Systems, Inc.
2918 Worthen Avenue
Los Angeles, CA 90039

PREPARED BY:
A One-Stop Environmental Company
2201 E Willow St., D-229
Signal Hill, California 90755-4132

July 26, 2019

RCRA CONTAINER STORAGE AREA CERTIFICATION
SAFETY-KLEEN SYSTEMS, INC. – LOS ANGELES
2918 WORTHEN AVENUE
LOS ANGELES, CALIFORNIA

Prepared for:

Safety-Kleen Systems, Inc.
2918 Worthen Avenue
Los Angeles, CA 90039

Prepared by:

A One-Stop Environmental Company
2201 E Willow St., D-229
Signal Hill, California
Phone: 562-426-2036

John W. Matthews, PE C 64105
Principal Engineer

July 26, 2019

TABLE OF CONTENTS

Section **Page**

1.0 INTRODUCTION..... 1
2.0 REGULATORY REVIEW 1
3.0 CERTIFICATION 3
4.0 REFERENCES..... 4

1.0 INTRODUCTION

A One-Stop Environmental Company (One-Stop) visually inspected the container storage areas in Units A, B and C of the Safety-Kleen Systems, Inc. (S-K) Los Angeles Service Center on July 19, 2019. The purpose of the inspection was to determine if the areas met the requirements of 22 CCR 66264.175 and 40 CFR 264.175. As a result of these visual inspections, John W. Matthews, P.E., a California registered civil engineer has prepared this certified report. In addition to the visual inspection, drawings provided by Safety-Kleen of the subject areas were reviewed.

The California Code of Regulations are at least as stringent as the corresponding Code of Federal Regulations, and California is an authorized state concerning implementation of the Resource Conservation and Recovery Act (RCRA). The appropriate sections of the regulations for the design of container storage areas are discussed in the following Regulatory Review Section.

2.0 REGULATORY REVIEW

22 CCR 66264.175. Containment.

(a) Container transfer and storage areas shall have a containment system that is designed and operated in accordance with subsection (b) of this section.

Each requirement of 22 CCR 66264.175(b) is considered and discussed in the following sections. The certifying engineer has determined that the design meets the requirements and the operator is responsible for operating the area in accordance with their permit, the operations plan and all applicable regulations.

(b) A containment system shall be designed and operated as follows:
(1) a base shall underlie the containers which is free of cracks or gaps and is sufficiently impervious to contain leaks, spills, and accumulated precipitation until the collected material is detected and removed;

The engineer's visual inspection of the secondary containment areas in Units A and B on July 19, 2019 did not discover any significant cracks or gaps that had not been appropriately sealed. In Units A, B and C, the Chem Tec One Concrete Penetrant had been reapplied on July 7, 8, and 9 of 2019. The Penetrant increases the concrete density and significantly reduces the porosity and is suitably resistant to the materials stored at the facility to allow spills to be contained and collected without penetrating the concrete in a reasonable period of time.

(2) the base shall be sloped or the containment system shall be otherwise designed and operated to drain and remove liquids resulting from leaks, spills, or precipitation, unless the containers are elevated or are otherwise protected from contact with accumulated liquids;

In units A, B, and C, all containers are stored on pallets. If the Unit C containment area were completely filled to the crest of the ramp, the bottom of the containers could be in contact with liquid, but this is a very unlikely condition and would only occur in a major spill event. This condition can quickly be remedied by responding to spills promptly and pumping collected liquids into appropriate containers.

(3) the containment system shall have sufficient capacity to contain precipitation from at least a 24-hour, 25-year storm plus 10 % of the aggregate volume of all containers or the volume of the largest container, whichever is greater. Containers that do not contain free liquids need not be considered in this determination;

The secondary containment in unit A is provided by two grated trenches at the North and South ends of the unit. The trench at the North end of Unit A extends the length of the exterior door facing Worthen Avenue. The trench at the South end of Unit A is shorter, but wider than the North trench. The volume of the North Trench is approximately 109 gallons and the volume of the South Trench is 64 gallons. The total capacity of the trenches is 173 gallons. Up to 1,730 gallons of containerized waste may be kept in unit A without exceeding the 10% volumetric capacity requirement of 22 CCR 66264.175.

The secondary containment in unit B is provided by a trench on the West portion of the perimeter. The trench has a width of 1.7 feet, a length of 12 feet and a depth of 2.5 feet with a total volume of 51 cubic feet or 381 gallons. Up to 3,810 gallons of containerized waste may be kept in unit B without exceeding the 10% volumetric capacity requirement of 22 CCR 66264.175.

The secondary containment in unit C is provided by a combination of a trench and a perimeter berm with a height of 4'' and a ramp for forklift access to maintain the minimum perimeter height of 4''. The trench has a width of 1.7 feet, a length of 11.7 feet and a depth of 2.5 feet with a total volume of 50 cubic feet or 372 gallons. The gross dimensions inside the curbs are 37'-8'' by 36'-10''. The minimum height of the ramp or perimeter curb is 4 inches or .33 feet. The gross containment volume is 462 cubic feet. A ramp and a rectangular pad near the exit door must be deducted from the gross volume. The rectangular pad has dimensions of 4' by 4'-4'' by 4'', for a total volume of 5.8 cubic feet. The ramp is 8 feet long by 10 feet wide, with a half-height of .17 feet. The volume occupied by the ramp is 12 cubic feet. Each pallet has an approximate volume of 2 cubic feet, and an approximate height of 5 inches. If 40 base pallets are stored in Unit D, the net containment volume is 364 cubic feet or 2,724 gallons. Combined with the trench volume, the total volume is 3,096 gallons. Up to 30,960 gallons of containerized waste may be kept in unit C without exceeding the 10% volumetric capacity requirement of 22 CCR 66264.175.

(4) run-on into the containment system shall be prevented unless the collection system has sufficient excess capacity in addition to that required in subsection (b)(3) of this section to contain any run-on which might enter the system; and

Run-on into the containment systems is prevented by the roof of the building, the surrounding

walls and the slope to drain precipitation away from the building.

(5) spilled or leaked waste and accumulated precipitation shall be removed from the sump or collection area in as timely a manner as is necessary to prevent overflow of the collection system. If the collected material is a hazardous waste under chapter 11 of this division, it shall be managed as a hazardous waste in accordance with all applicable requirements of chapters 12 through 16 of this division. If the collected material is discharged through a point source to waters of the United States, it is subject to the requirements of section 402 of the Federal Clean Water Act, as amended (33 U.S.C. section 1342).

The secondary containment areas are inspected by Safety-Kleen personnel each operating day. All personnel have been trained to remove any accumulated liquids discovered in the containment areas within 24-hours of the discovery. Spill control equipment is available on site to respond to minor spills that are likely to occur. All spill residues are assumed to be hazardous wastes unless there is analytical documentation or sufficient generator knowledge to demonstrate otherwise. All spill residues are collected and sent for appropriate off-site recycling or disposal. No spill residues are discharged through a point source.

3.0 CERTIFICATION

I, John W. Matthews, P.E. have inspected the container storage facilities and reviewed drawings and calculations provided by Safety-Kleen Systems, Inc. for the container storage areas in Units A, B and C of the Safety-Kleen, Los Angeles California Facility. The secondary containment provided for the storage areas is sufficient to meet the requirements of the State of California and the Federal EPA requirements.

I certify under penalty of law that this secondary containment document was prepared by me. Based on my inquiry of the person or persons who manage the system, or those persons directly responsible for gathering the information, the information submitted is, to the best of my knowledge and belief, true, accurate, and complete. I am aware that there are significant penalties for submitting false information, including the possibility of fine and imprisonment for knowing violations.

John W. Matthews, P.E.
California Registered Professional Engineer

4.0 REFERENCES

Safety-Kleen Systems, Inc. Part B Renewal Application for the Los Angeles Service Center

22 CCR 66264.175

40 CFR 264.175

APPENDIX IV-2

WASTE UNDERGROUNG TANK

CERTIFICATION

December 2019

TI&CS
Providing Innovative Solutions
Testing, Inspection & Certification Services
www.FRPengineer.com

J.M. Plecnik Ph.D., P.E.
Christine Bosque Ph.D., Chemistry
Joseph M. Plecnik Jr., BSCE
Nikolai Plecnik, BSF
JP@FRPengineer.com

3562 Cerritos Ave.
Los Alamitos, CA 90720
(562) 900-3118
(562) 449-9166
Joe@FRPengineer.com

Tank No.

Waste Solvent Tank

Client:	Safety-Kleen, Inc. 2918 Worthen Ave. Los Angeles, CA 90039
TI&CS Report Number:	19-11-45
Report Title:	Evaluation and Certification of the Waste Solvent Tank at the Safety-Kleen facility in Los Angeles, California Per Title 22 CCR 66264.192 and 66264.193
Author(s):	Joseph M. Plecnik, Ph.D., P.E. TI&CS 3562 Cerritos Ave. Los Alamitos, CA 90720 (562) 900-3118
Inspection Date:	11/02/2017 & 11/11/2019
Date of Issue:	12/11/2019
Next Recommended Inspection Date:	11/11/2024

P.E. Licenses: AL, AZ, CA, CO, FL, GA, HI, ID, IL, IN, IA, KS, KY, LA, MD, MA, MI, MN, MO, NE NV, NM, NY, NC, OH, OK, OR, PA, SC, TN, TX, UT, VA, WA, WV, WI, WY

Table of Contents

Item	Page	Regulation
Tank Configuration	4	66264.192 (l) (1)
Age of Tank	4	66264.192 (l) (3)
Design Standards	5	66264.192 (l) (2)
Hazardous Characteristics	5	66264.192 (l) (8)
Material of Construction	5	66264.192 (l) (2) (A)
Material Thickness	5	66264.192 (l) (2) (B)
Piping	5	66264.192 (l) (2) (C)
Pumps	5	66264.192 (l) (2) (D)
Drawing of Tank	6	66264.192 (l) (2) (E)
Leak Detection	7	66264.192 (l) (4)
Corrosion Protection	7	66264.192 (l) (5)
Spill Prevention	7	66264.192 (l) (6)
Secondary Containment	8	66264.192 (l) (7)
Anchorage	8	66264.192 (b)
Tank Analysis	8	66264.192 (b)
Installation Inspection	9	66264.192 (l) (9)
Tightness Test	9	66264.192 (l) (10)
Remaining Life	9	66264.192 (l) (11)

PE Certification

Tank and Secondary Containment
Assessment Document for New Tanks
CCR Section 66264.192 and 66264.193

This document was prepared for:

Safety-Kleen, Inc.

2918 Worthen Ave.
Los Angeles, CA 90039

Tank System / Identification:

Waste Solvent Tank

Date of Inspection(s) / Assessment:

11/2/2017 & 11/11/2019

I certify under penalty of law that this document and all attachments were prepared under my direction or supervision in accordance with a system designed to assure that qualified personnel properly gather and evaluate the information submitted. Based on my inquiry of the person or persons who manage the system, or those persons directly responsible for gathering the information, the information submitted is, to be the best of my knowledge and belief, true, accurate, and complete. I am aware that there are significant penalties for submitting false information including the possibility of fine and imprisonment for knowing violations.

Dr. Joseph Matthew Plecnik
California PE No.: C26354
3562 Cerritos Ave.
Los Alamitos, CA 90720

P.E. Stamp

Inspector's name: Joseph Michael Plecnik (Jr.) Date: **12/11/19**

Tank Info

Tank Name: Waste Solvent Tank

Date of Inspection: 11/2/2017 & 11/11/2019

Tank Configuration:

Type: UST

Shape: Cylindrical with flat ends

Orientation: Horizontal

Dimensions:

	Straight Shell	*Overall*	
Length =		32	feet
Diameter =		8	feet

Gross Capacity: 12,032 gallons

Material / Liquid Stored: S-K Premium Solvent with grease and oils from the recommended cleaning process of metal parts; Distillates (petroleum), hydrotreated light distillates

Location: Below ground; North of main office building; East of Virgin Solvent Tank

Manufacturer: Modern Welding Co., Inc.

Serial Number or Other: UL# J360304

Age of Tank: 1993 or 26 years

Other Identifying Features: Not Applicable;
This is a UST & the exterior is not visible.

Design Standards

Design Standards: API 650, ASCE 7-16, CBC 2016

Specific Gravity: 0.77 to 0.82 (Design = 1.1)

Hazardous Characteristics of the waste (NFPA 704): Visible on Tank: **No**

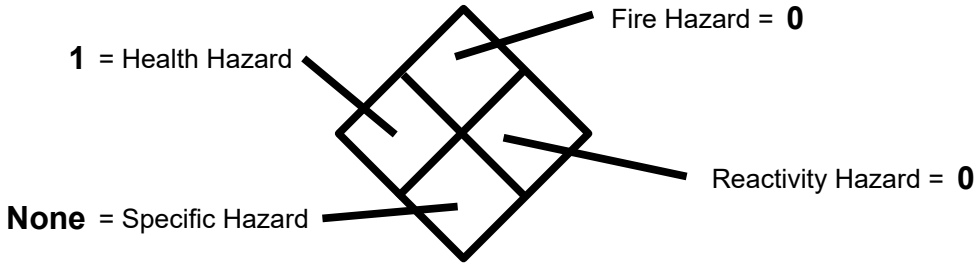

Design / Operating Temperature: Ambient

Design / Operating Pressure: Atmospheric

Material of Construction: Carbon steel Primary & Secondary (outer) shells with FRP coating on exterior of Secondary (outer) shell

Material Thickness (Average): (See Appendix A for UT report)

Method: Ultrasound (UT)

Ancillary Equipment

Piping:

Description: (1) 3 inch diameter carbon steel fill pipe;
(1) 4 inch diameter carbon steel suction pipe to truck;
(1) 2 inch diameter carbon steel vent pipe

Material: Carbon Steel for primary pipes;
FRP for secondary containment pipes

Size(s): 2 inch, 3 inch, 4 inch

Pumps:

Type: Electric

Capacity: (Approx.) < 5 gallons

Drawing

(Not To Scale)

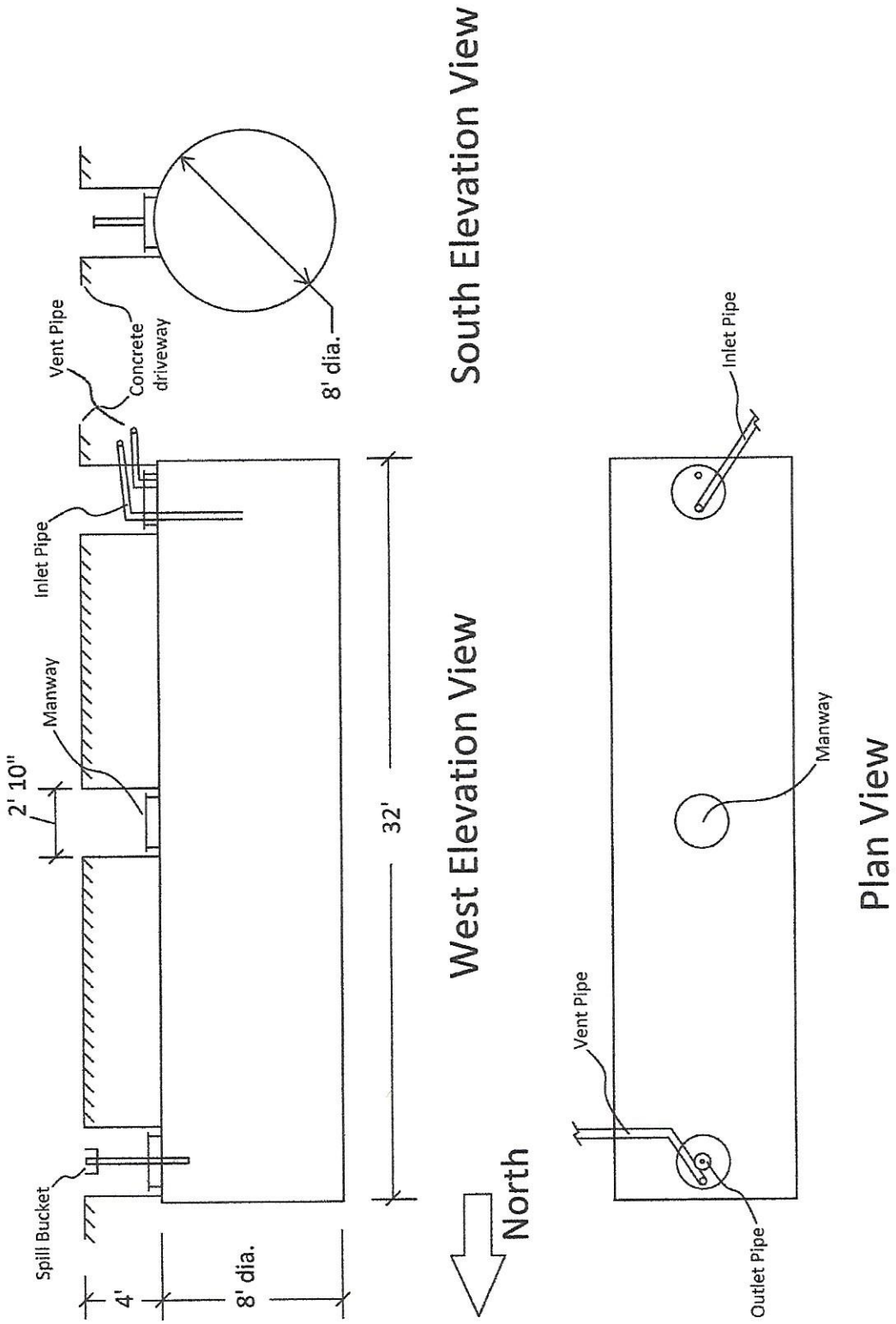

Protection I

Leak Detection:

The annular space and sumps that provide secondary containment for the primary tank are continuously monitored by an electronic leak detection system manufactured by Veeder Root and is maintained and tested on an annual basis. At the time of this inspection, each of the monitoring probes was tested and were in good working order and no signs of leaks were detected.

Corrosion Protection:

The exterior of the secondary tank (outer shell) is completely coated in FRP (fiberglass). A cathodic protection system is installed on the tank and is tested every three years. Two 17 pound prepackaged magnesium anodes are attached to the sides of the tank and buried in native soil. An electrical box just north of the tank allows for the testing of the anodes. As of October 5, 2017, the anodes were tested and were found to be in good working order.

Spill Prevention:

Item	Available	Type
Level Gauge	Yes	The Veeder Root system acts as the level gauge for this tank.
Shut-off Valve	Yes	The Veeder Root system automatically shuts off all equipment that transfers all liquid to the tank.
High Level Alarms	Yes	The Veeder Root system produces an audible and visual alarm when either the tank is full or when a spill is detected.

Venting:

Compartment	Vent Type	Available	Correct Size
Primary	Normal	Yes	Yes
	E-Vent	No	
Secondary	E-Vent	No	

Protection II

Secondary Containment:

Description:	The entire primary shell of the Waste Tank is completely encapsulated by the secondary tank or shell which provides a minimum of 12,158 gallons of containment.
Inspection:	At the time of this inspection, the secondary containment was dry and free of standing liquid.

Anchorage:

Report:	TI&CS Report # 19-10-15 Assessment & Analysis of Solvent Waste Double Wall Underground Storage Tank at the Safety-Kleen Facility at 2918 Worthen Ave. Los Angeles, CA per CCR 66264.192 and CCR 66264.193
Description:	The tank was analyzed in the above report for flotation, dislodgement, etc. and does not require any anchorage.

Tank Analysis:

Report:	TI&CS Report # 19-10-15 Assessment & Analysis of Solvent Waste Double Wall Underground Storage Tank at the Safety-Kleen Facility at 2918 Worthen Ave. Los Angeles, CA per CCR 66264.192 and CCR 66264.193
Description:	Structural and Seismic analysis for the design of the fiberglass tank shell.

Installation Inspection

Weld Cracks / Breaks:	None
Scrapes of Protective Coatings:	None
Corrosion:	None
Damage or Deficiencies:	None

Tightness Test

Description:	A pressure test of the annular space between the shells was conducted for one hour at approx. 5 psi.
Leaks Detected:	None
Pass:	Yes

Chemical Compatibility

There are many unknown chemicals found in the stored liquid of the Waste Tank due to the varying industries and companies contracting with Safety-Kleen. All of the unknown and known chemicals stored within this tank appear to have little affect on the interior steel surfaces of the tank. The certifying engineer and the field engineer mentioned in this report have had over 12 years of experience with this particular tank and other underground waste solvent tanks located at Safety-Kleen facilities throughout California. We have concluded that the stored liquids have very little effect on carbon steel shells based on detailed visual inspections and the presence of indicators, such as manufacturing chalk marks.

Estimated Remaining Life of Service

The tank / vessel mentioned in this report has a remaining life expectancy of approximately **20 years** based on the observation of the interior surfaces, thickness testing and analysis, and the professional engineer's experience with similar tanks operating in similar environments. The life expectancy may increase or decrease if the operating environment and/or the stored chemicals change. This is just an estimation. TI&CS, its associates, and its affiliates are not responsible for the accuracy of the remaining life expectancy of this tank / vessel.

Recommendations

1. Visually inspect and clean the screen for the normal vent for the Waste Tank located at the top of the building, just south of the tank.

Re-Inspection Date

On or before **September 20, 2024**, unless Federal, State, or Local agencies require an earlier inspection date.

Appendix A:

Ultrasound Data

TI&CS
Providing Innovative Solutions
Testing, Inspection & Certification Services
www.FRPengineer.com

J.M. Plecnik Ph.D., P.E.
Christine Bosque Ph.D., Chemistry
Joseph M. Plecnik Jr., BSCE
Nikolai Plecnik, BSF
JP@FRPengineer.com

3562 Cerritos Ave.
Los Alamitos, CA 90720
(562) 900-3118
(562) 449-9166
Joe@FRPengineer.com

Tank Thickness Report

Waste Tank

for

(

Safety-Kleen
Los Angeles

2918 Worthen Ave.
Los Angeles, California 90039

TI&CS
Providing Innovative Solutions
Testing, Inspection & Certification Services
TI&CS 3562 Cerritos Ave. Los Alamitos, CA 90720
Joe@FRPengineer.com 562-449-9166

Material Thickness Report

Tank / Vessel Name: Waste Tank

Date: 11/11/19

Client: Safety-Kleen

Time: 11:00 AM

Location: 2918 Worthen Ave. Los Angeles, CA 90039

Description:

Technician:
Joseph Michael Plecnik BSCE
NDT Level II- UT

Info	
Procedure:	TICS-UT-T-001
Device Mfr.:	GE
Device Model:	DMS Go+
Transducer:	DA 501 EN
Trans. Dia.:	0.25”
Device S/N:	GOPLS18040006
Trans. S/N:	60633
Trans. Freq.:	5 MHz
Test Material:	C/S
Test Mat. Velocity:	0.2355
Coating / Thick:	None

Calibration Block	
Cal. Block Type:	5 Step
Cal. Block Material:	C/S
Cal. Block S/N:	A29920
Cal. Block Temp:	Ambient
Test Item Temp:	Ambient
Temp. Correction:	No

Calibration (inches) [±0.005 in.]			
Cal. Actual	0.300	0.200	0.100
Initial Reading	0.300	0.200	0.100
Final Reading	0.300	0.200	0.100

Thicknesses (in.)									
	Flat Ends		Mid Sections						
Reading	North End	South End	Section 1	Section 2	Section 3	Section 4	Section 5	Section 6	
1	0.272	0.278	0.253	0.258	0.249	0.250	0.247	0.260	
2	0.275	0.274	0.258	0.247	0.249	0.251	0.248	0.256	
3	0.274	0.276	0.266	0.253	0.250	0.255	0.254	0.263	
4	0.272	0.276	0.273	0.250	0.250	0.253	0.249	0.273	
5	0.275	0.275	0.264	0.257	0.251	0.252	0.248	0.265	
6	0.276	0.276	0.246	0.246	0.250	0.246	0.246	0.257	
7	0.275	0.275	0.254	0.256	0.261	0.254	0.248	0.259	
8	0.274	0.275	0.261	0.247	0.249	0.247	0.250	0.261	
9	0.274	0.274	0.256	0.249	0.247	0.246	0.257	0.264	
10	0.274	0.275	0.258	0.246	0.256	0.274	0.251	0.264	
11			0.263	0.248	0.253	0.252	0.258	0.253	
12									
13									
14									
15									
16									
17									
18									

* NR = No Reading

Min.	0.272	0.274	0.246	0.246	0.247	0.246	0.246	0.253	
Average	0.274	0.275	0.259	0.251	0.251	0.253	0.251	0.261	
STD Dev.	0.001	0.001	0.007	0.005	0.004	0.008	0.004	0.005	

Field Drawing
(Not to Scale)

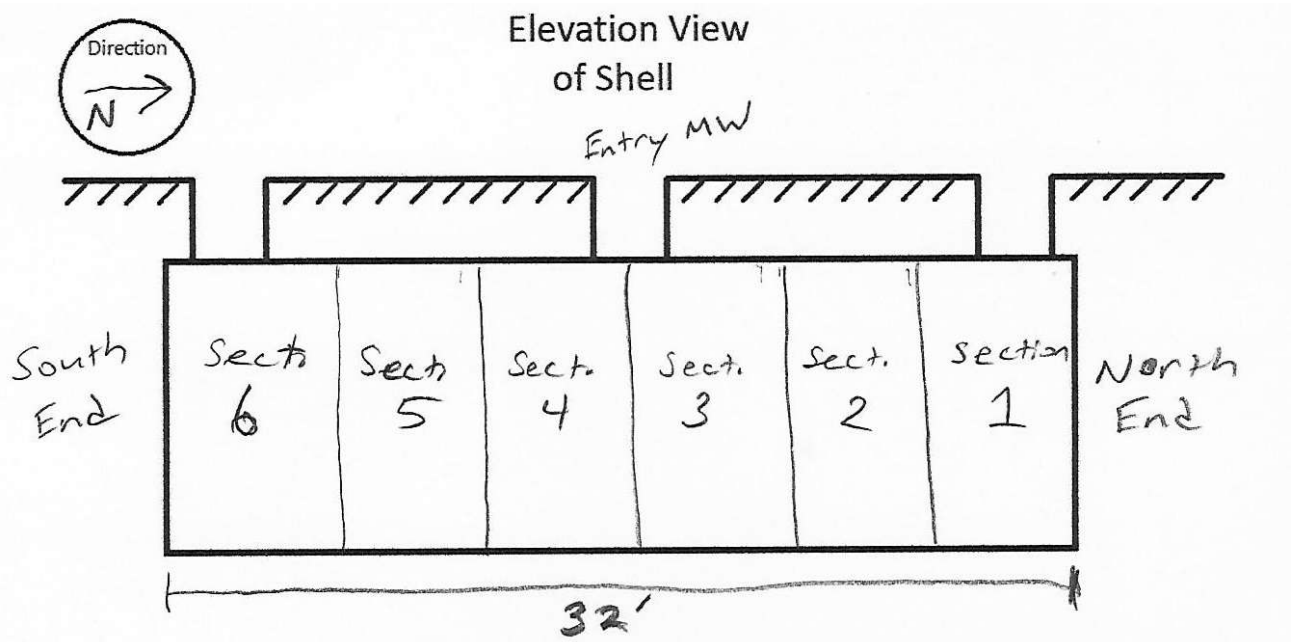

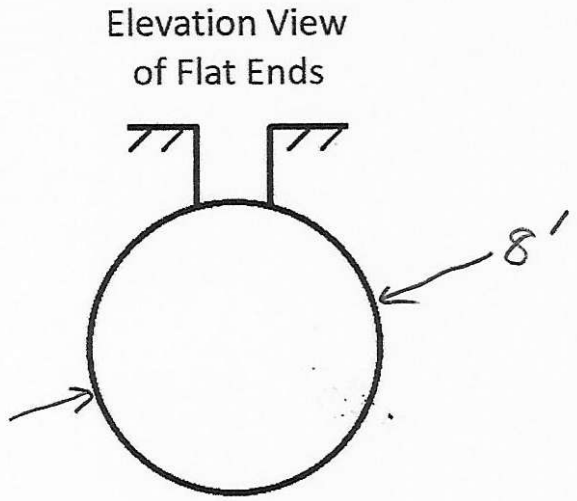

Comments:

Location: S-K Los Angeles

Field Drawing
(Not to Scale)

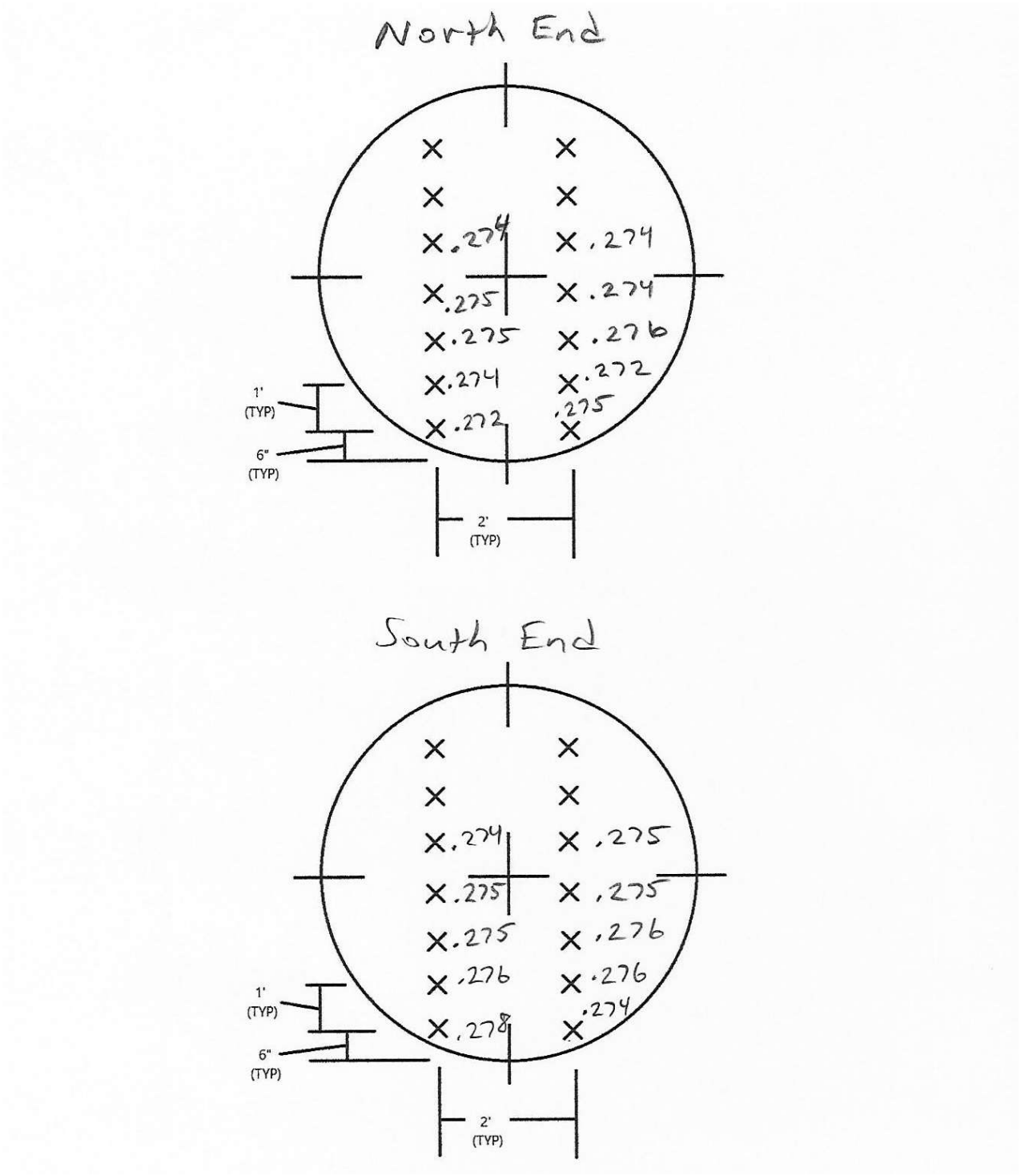

Comments:

Location: S-K Los Angeles

Field Drawing
(Not to Scale)

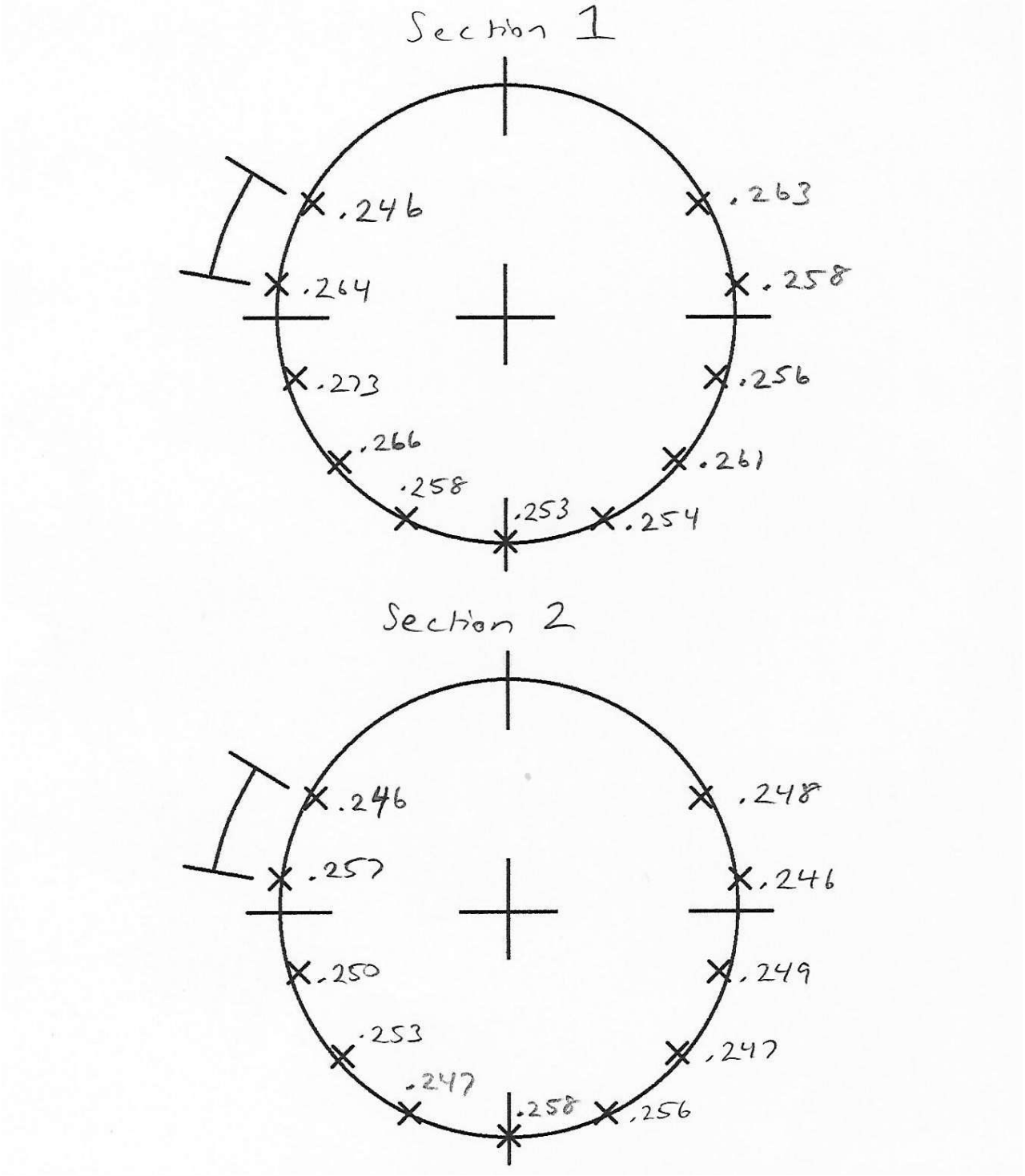

Comments:

Location: S-K Los Angeles

Field Drawing
(Not to Scale)

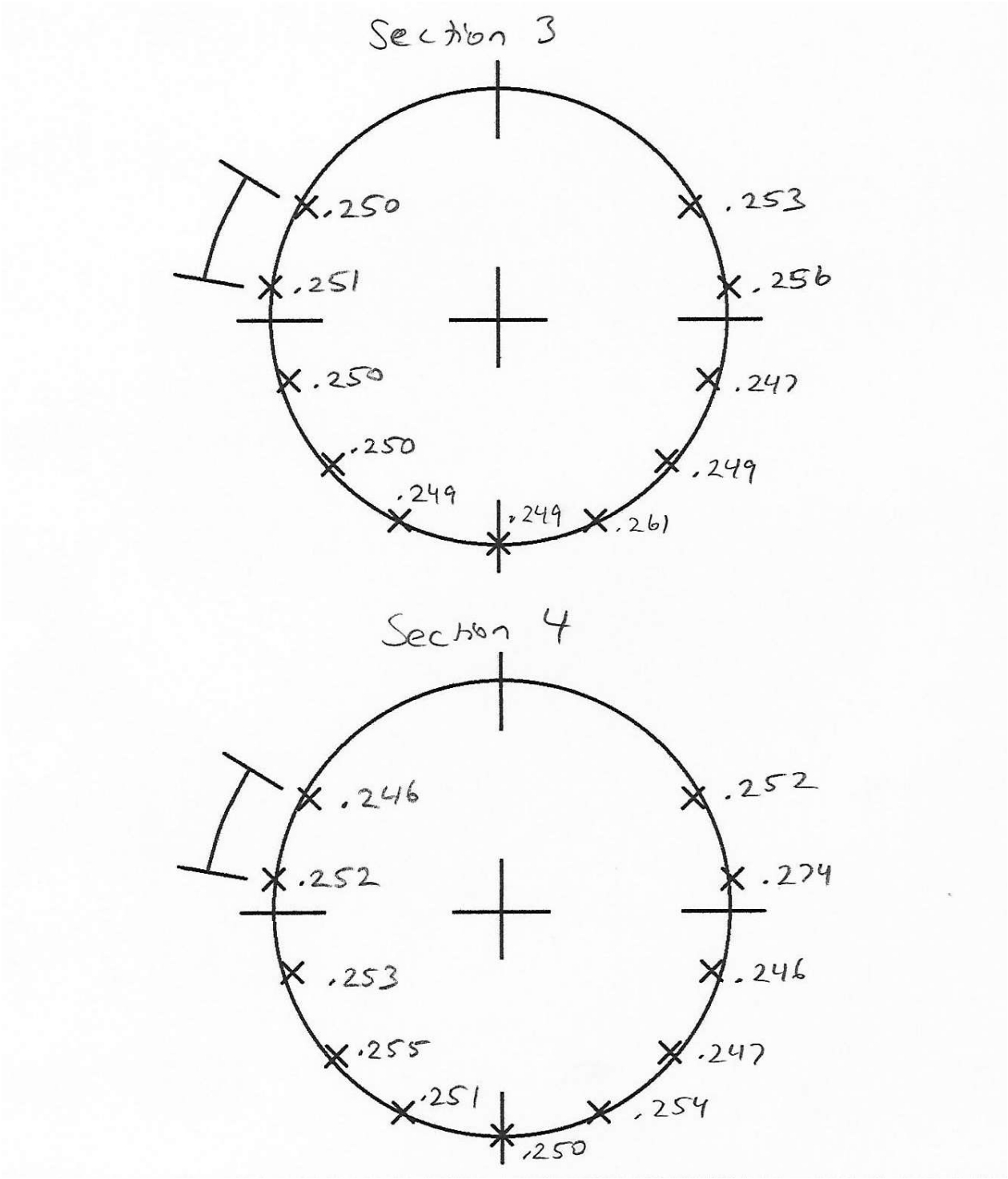

Comments:

Location: S-K Los Angeles

Field Drawing
(Not to Scale)

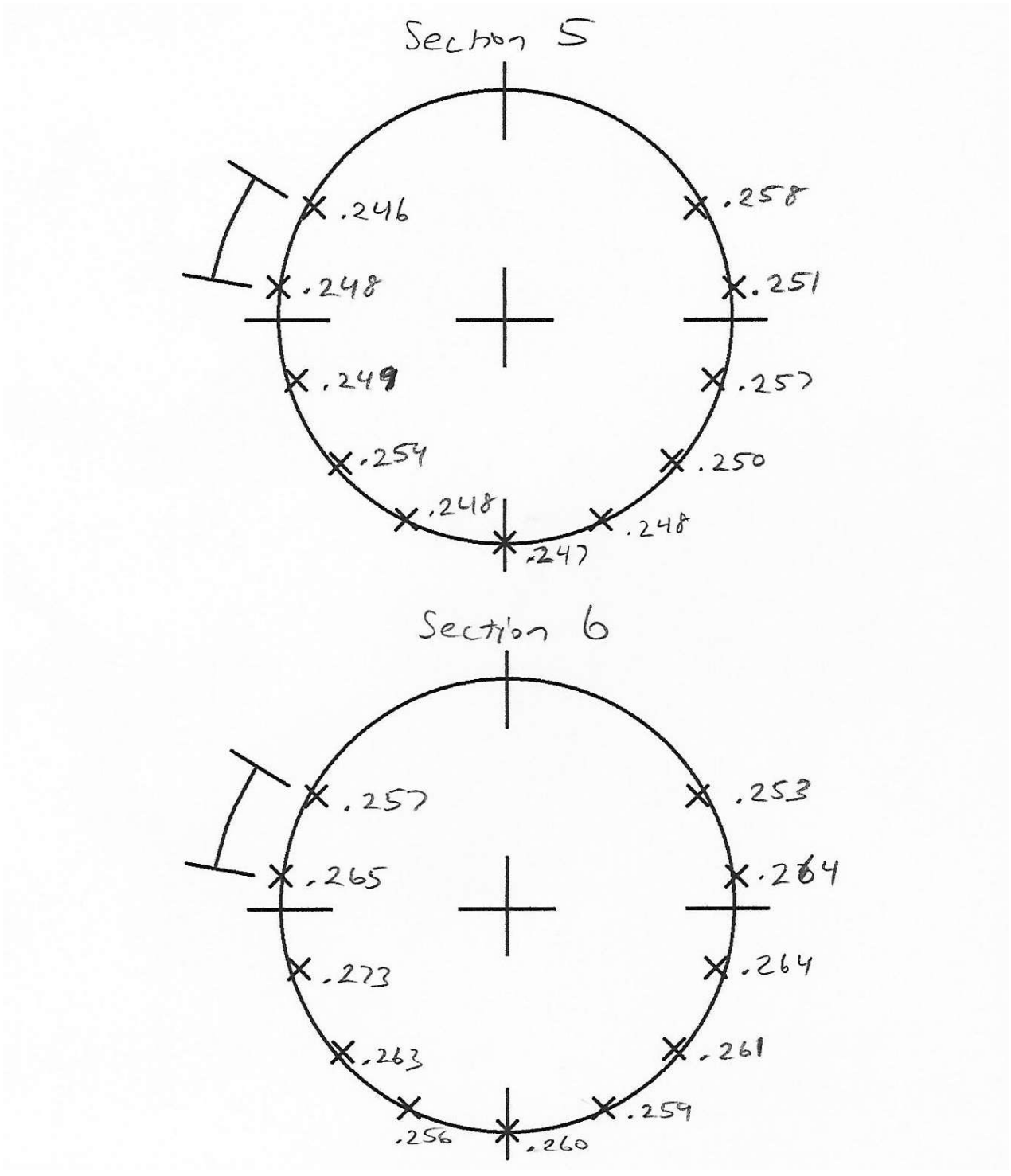

Comments:

Location: S-K Los Angeles

NDT METRICS
3912 CERRITOS AVENUE, LOS ALAMITOS, CA 90720 Voice: (562) 431-8161 Fax: (562) 431-3226

CERTIFICATE OF CALIBRATION

CUSTOMER	TI&CS 3562 CERRITOS AVE LOS ALAMITOS, CA	CERTIFICATION NO	42626
		PAGE 1 OF	2
PO	VERBAL		

INSTRUMENT ASSET	GE DMS GO+ s/n GOPLS18040006	TEMP: AIR	72 °F
		WATER	n/a °F
		HUMIDITY	45 %RH

CERTIFICATION DATE	23 Sep 2019
DUE DATE	22 Sep 2020
SPECIFICATIONS	Mfg Specs

NDT METRICS certifies that the above instrument meets or exceeds the published specifications listed using procedures contained within the specifications or as noted, and has been verified using industry accepted standards whose accuracies are acceptable under the limitations of ultrasonic techniques, and standards traceable to the National Institute of Standards and Technology within the limitations of the Institute's calibration services.
The certification system is in compliance with MIL-STD-45662A, ANSI/NCSL Z540-2006, IEC/ISO17025-2005 AND ISO10012-2003.

CONDITION RECEIVED	CONDITION RETURNED
[X] WITHIN TOLERANCE	[X] WITHIN TOLERANCE INSTRUMENT ACCURACY Mfg Specs
[ ] OUT OF TOLERANCE	[ ] OUT OF TOLERANCE
[ ] OPERATIONAL FAILURE	[ ] LIMITED CERTIFICATION, REFER TO THE REPORT

Internal adjustments and measurements where applicable have been made with the following NIST traceable M&TE:

A01041	Fluke 8050A Digital Multimeter 3570082	Cal due: 03/25/2020
A01772	Branson .050" to .250" Steel Step Block 87302	Cal due: 01/02/2024
A01773	Branson .100" to .500" Steel Step Block 87304	Cal due: 01/02/2024
A01801	Agilent Technologies 54641A Oscilloscope MY42000347	Cal due: 01/02/2020
A01822	Applied Test Systems IIW Type 1 Weld Block 86201	Cal due: 01/08/2024
A04502	Agilent Technologies DSO-X 3034A Oscilloscope MY52012934	Cal due: 10/24/2019

NDTS

CERTIFIED BY QUALITY CONTROL/TECHNICAL MANAGER

This certificate may not be reproduced, except in full, without the express written permission of NDT METRICS.

NDT METRICS
3912 CERRITOS AVENUE, LOS ALAMITOS, CA 90720 Voice: (562) 431-8161 Fax: (562) 431-3226

CERTIFICATE OF CALIBRATION

CUSTOMER	TI & CS 3562 CERRITOS AVE LOS ALAMITOS, CA	CERTIFICATION NO	42635
		PAGE 1 OF	1
PO	VERBAL		

INSTRUMENT ASSET	GE 5 STEP BLOCK s/n A29920	TEMP: AIR	73 °F
		HUMIDITY	48 %RH

CERTIFICATION DATE	25 Sep 2019
DUE DATE	24 Sep 2020
SPECIFICATIONS	Mfg Specs

NDT METRICS certifies that the above instrument meets or exceeds the published specifications listed and has been calibrated using procedures contained within the specifications or as noted, and standards whose accuracies are traceable to the National Institute of Standards and Technology within the limitations of the Institute's calibration services. Our certification system is in compliance with MIL-STD-45662A, ANSI/NCSL Z540, ANSI/ISO 17025 AND ISO 10012.

CONDITION RECEIVED	CONDITION RETURNED
[X] WITHIN TOLERANCE	[X] WITHIN TOLERANCE INSTRUMENT ACCURACY Mfg Specs
[ ] OUT OF TOLERANCE	[ ] LIMITED CERTIFICATION, REFER TO THE REPORT
[ ] OPERATIONAL FAILURE	

Validated using NDT Metrics procedure ICP118. Measurement standard uncertainty is: +/- .223Mils
Steps measured: .100", .200", .300", .400", .500" +/- .5Mils

Internal adjustments and measurements where applicable have been made with the following NIST traceable M&TE:

A01051 Luxair 0 - 6.0" Vernier Caliper 0816636 Cal due: 03/25/2020

TO NDTS

CERTIFIED BY QUALITY CONTROL/TECHNICAL MANAGER

This certificate may not be reproduced, except in full, without the express written permission of NDT METRICS.

APPENDIX IV-3

ASSESSMENT OF THE INSTALLATION OF UNDERGROUND STORAGE TANKS

PREPARED BY:
GERAGHTY & MILLER, INC.
DECEMBER 14, 1993

UNDERGROUND STORAGE TANKS INSTALLATION REPORT

Safety-Kleen Branch Service Center
2918 Worthen Avenue
Los Angeles, California

December 14, 1993
CA0207.001

Prepared for:

Safety-Kleen Corporation
Sacramento, California

Prepared by:

Geraghty & Miller, Inc.
Environmental Services
One Technology Drive, Suite F-213
Irvine, California 92718
(714) 753-0444

UNDERGROUND STORAGE TANK INSTALLATION REPORT
SAFETY-KLEEN BRANCH SERVICE CENTER
LOS ANGELES, CALIFORNIA

December 14, 1993
CA0207.001

Geraghty & Miller, Inc. is submitting this report to Safety-Kleen Corporation for work performed at the Safety-Kleen Los Angeles Service Center (EPA ID # CAT000613935). The report was prepared in conformance with Geraghty & Miller's strict quality assurance/quality control procedures to ensure that the report meets the highest standards in terms of methods used and the information presented. If you have any questions or comments concerning this report, please contact one of the individuals listed below.

Respectfully submitted,

GERAGHTY & MILLER, INC.

Syed Asim Husain
Engineer

Sean Ragain
Senior Scientist

Craig Neslage
Associate/Office Manager

1.0 INTRODUCTION

Geraghty & Miller, Inc. has prepared this report to present the observations made during the installation of two, new, double-wall, 12,000-gallon underground storage tanks (USTs) at the Safety-Kleen Corporation Branch Service Center (EPA ID # CAT000613935) located at 2918 Worthen Avenue in Los Angeles, California. A site location map and site plan are included as Figures 1 and 2, respectively. One tank (product UST) is for the storage of mineral spirits (see MSDS Appendix A) and one (waste UST) is for the storage of waste mineral spirits.

This report has been prepared in accordance with Title 22 of the California Code of Regulations (22 CCR) and Title 40 of the Code of Federal Regulations (40 CFR) requirements for hazardous waste storage facilities. Specifically, the regulations apply to the installation of the waste tank. In accordance with 22 CCR 66264.192 and 66264.193 and 40 CFR 264.192 and 264.193, owners or operators of new tank systems must obtain a written assessment certified by an independent, qualified, registered professional engineer. This report provides the written assessment and certification.

A report describing the removal of the 12,000 gallon used solvent UST, 1,000-gallon mineral spirit sludge settling tank, and 12,000-gallon product UST previously in use at the site is being submitted under a separate cover entitled "Underground Storage Tank Removal Report, Safety-Kleen Branch Service Center, 2918 Worthen Avenue, Los Angeles, December 1993). The tank removal immediately preceded the tank installation described in this report. The new USTs were installed in the common excavation. The UST replacement activities were acknowledged by DTSC in correspondence dated July 1, 1993.

2.0 TANK INSTALLATION PROCEDURES

The removal of the old UST and installation and piping of new tanks was conducted by Petro Builders, Inc. (License # 241905, Class A, B, C61, D40 & HAZ) of Santa Fe Springs, California. The former USTs were removed by Petro Builders between August 3, 1993 and August 10, 1993. The new USTs and piping were installed between September 16, 1993 and October 10, 1993. The installation of the new USTs was conducted in accordance with the design prepared by Tera, Inc. of Houston, Texas, in June, 1992.

An installation-qualified engineer working under the direction of a professional engineer observed the tank installation that commenced on September 16, 1993. This section describes the installation work as summarized from daily field reports. Photographs of the tank installation work are included in Photographs section. Photocopies of replacement permit are included in Appendix B.

The excavation was prepared by installing non-woven filter fabric along the bottom and side walls of the tank pit. Two concrete hold-downs (deadmen) for each tank were spaced eight feet apart on either side of the excavation. The deadmen were then covered by placing approximately 2 feet of pea gravel in the bottom of the pit which was graded to the approximate slope at which the tanks were to be placed. The tanks were installed to slope toward the northeast end of the excavation where the interstitial space monitor was to be placed. Reinforced steel bar (re-bar) straps were cast into each deadman for attaching the tank anchors.

On September 16, 1993, two, 12,000-gallon, double-wall, steel, fiberglass-coated carbon steel tanks (Glasteel) manufactured by Modern Welding Company were delivered to the site. The waste tank (UL# J360304, ACT100# A13924) was delivered with a vacuum in the interstitial space measuring 11 inches of mercury. The product tank (UL# J360305, ACT100# A15675) was delivered with a vacuum in the interstitial space measuring 5.5 inches of mercury. Inspector John Sparks of the Los Angeles City Fire Department (LACFD) was present to observe the tank installation. The tanks were unloaded using a crane and suspended over

uncapped ground surface to test the integrity of the coating (Holiday Test). The test was accomplished by grounding the secondary containment tank, applying 35,000 volts to the fiberglass-coated clad steel secondary tank, and passing a T-shaped probe over the entire exterior surface of the tank. Any crack or opening in the coating would cause a spark when the conductive paddle was passed over that location. The coating integrity test in the fiberglass coating yielded no integrity lapse.

The tanks were installed in accordance with the manufacturer's requirements and American Petroleum Institute (API) Recommended Practice 1615 (API 1615) guidelines. The waste tank was placed in the excavation first followed by the product tank. After placement, a transit was used to check the elevation and slope of the tanks. A 1.5-inch drop from end to end toward the interstitial monitoring point was measured along the axis of the waste and product tanks.

Strips of rubber supplied by the tank manufacturer were placed between the fiberglass tank coating and the hold down straps to protect the tank finish. The hold down straps were attached to the deadmen to secure the tanks. Pea gravel was placed into the excavation to within 2 feet of the top of the tanks. On September 17, 1993 the shoring sheet piles that were installed prior to the removal of the old USTs were pulled using a vibratory pile driver. As the sheet piles were removed, small voids created along the edge of the excavation were filled with pea gravel and compacted.

Vent piping was installed from each tank to the vent risers attached to the side of the service center. Moisture knock-out pots were installed in each line. On September 24, 1993, the primary lines were installed and tested according to National Fire Protection Association (NFPA) Title 349. Inspector John E. Sparks of LACFD Underground Tank Enforcement Unit was on-site to observe the pressure test of the primary system. The waste tank was pressurized with air to 2.5 pounds per square inch (psi), the vent line to 60 psi, and the drain line to 80 psi. The product tank was pressurized to 2.5 psi, the vent line to 60 psi, and the product line to 80 psi. The pressure in each of the pressurized sections was maintained for 60 minutes with no

leakage. A soapy solution was applied with a sponge to all tank openings, riser appurtenances, and pipe joints connections and no leaks were found. After the test, the black iron riser pipe from the interstitial monitoring point was triple wrapped with sealing tape. The base of the wrap was then sealed to the tank with fiberglass and adhesive resin.

On September 27, 1993, the secondary containment piping installation was completed and inspected. Inspector John E.Sparks of LACFD was present to witness the secondary containment test. The secondary containment piping was pressurized to 5 psi for 30 minutes. Soapy water solution was applied with a sponge to all joints. No leaks were visible, and no drop in secondary containment pressure was observed during the test. The six containment sumps for the secondary containment piping had been filled the previous day with water to a level above any piping or electrical conduit penetrations. No leaks were found in these secondary containment sumps based on visual observation, and the work was approved by the LACFD. All lines to and from the tanks were verified to slope toward the secondary containment sumps with a level.

According to 22 CCR 66264.192 and 40 CFR 264.192, acceptable corrosion-protection measures for steel tanks include a fiberglass coating and a cathodic protection system with electrical isolation devices. A corrosion protection plan was completed by Farwest Corrosion Control Company of Bakersfield, California (Appendix C). Two, 17-pound, magnesium anodes were specified for each UST. The anodes were installed approximately three feet from the sidewalls of the excavation 10 feet below ground surface. On September 30, 1993, the cathodic protection lead was welded onto the exposed steel of the tank lifting lugs. The lugs were then sealed with a fiberglass cap. The tanks were electrically-isolated from the other parts of the system by installing isolation bushings on all product, waste, and vent piping. The isolation bushings on the vent lines were connected at the moisture knock-out pot flange and the isolation bushings on waste and product piping were installed inside the containment sumps.

After all below-grade piping and electrical components were installed and inspected, the excavation was backfilled with pea gravel to 18-inches of ground surface. A 1-foot base lift

was placed on the backfill and compacted. The surface was completed with a 6-inch concrete slab reinforced with a single mat of #4 re-bar at 12-inch centers in each direction.

A precision tank test was performed on October 7, 1993 by R.J. Meyers & Sons, Inc. (Register #92-1044) of North Hollywood, California. R.J. Meyers & Sons is authorized by the State Water Resources Control Board to certify the "tightness" of tanks in Los Angeles County. A pressure test was performed on the product line on October 7, 1993, and certified. Certified tank test results are attached as Appendix D. Both systems were certified as "tight" by representatives from the LACFD. On October 10, 1993 the LACFD approved both the product and waste UST for operation.

3.0 TANK INSTALLATION AND ASSESSMENT

The tank installation assessment has been prepared in compliance with CCR 66264.192 and 40 CFR 264.192. For brevity, for those items addressed in both the CCR and CFR, the text from the CCR has been used.

3.1 ASSESSMENT PER 22 CCR 66264.192(a)

(a) Tanks shall have sufficient shell strength and, for closed tanks, pressure controls (e.g., vents) to assure that they do not collapse or rupture. The Department will review the design for the tanks, including the foundation, structural support, seams and pressure controls and seismic considerations. The Department shall require that a minimum shell thickness be maintained at all times to ensure sufficient shell strength. Factors to be considered in establishing minimum thickness include the width, height and materials construction of the tank, and the specific gravity of the waste which will be placed in the tank. In reviewing the design of the tank and approving a minimum thickness, the Department shall rely upon appropriate industrial design standards and other available information.

The two new tanks were constructed by Modern Welding Company according to Safety-Kleen specifications that include the Underwriters Laboratories, Inc., Standard for Steel Underground Tanks for Flammable and Combustible Liquids, UL-58 (1987). Modern Welding Company states that the two underground storage tanks provided to Safety-Kleen for the Los Angeles Service Center were constructed to comply with UL-58, UL-142, EPA 280.20, NFPA Titles 30 and 31, and the Uniform Fire Code. The design specified a double-wall steel tank with a fiberglass outer coating. The inner tank was constructed of 0.25-inch hot-rolled carbon steel. The outer tank was constructed of 7-gauge carbon steel with a 0.125-inch (approximately 100 mils) fiberglass outer coating. The manufacturer's installation information and tank design documents are included in Appendix E.

To verify compliance with applicable CCR and CFR regulations, a certification of the Los Angeles service center tank systems design was completed by TERA, Inc. of Houston, Texas prior to the installation . The certification was prepared in the document entitled "Design Assessment Proposed Used Solvent Storage Tank System, Los Angeles, California Branch (June 1992). The tank systems were designed, constructed, and installed to meet the requirements of their use as outlined in the Design Assessment. The design provides shell strength, seams and thickness for the intended life and use of the tanks. The tank systems were designed and installed to contain mineral spirits which has a specific gravity ranging from 0.775 to 0.795. The tank operating pressure is atmospheric and operating temperatures ambient. As required, each tank is equipped with overfill protection, float valves and vents. A minimum thickness of 0.25 inches of hot-rolled carbon steel is anticipated to be maintained throughout the life of the tanks. As for the design, the vents provide pressure controls so that the tanks will not collapse or rupture under conditions of intended use. The installation provides foundation and structural support given the intended use and conditions of the site, as outlined in the Design Assessment. The recommendations of the Design Assessment regarding seismic considerations were strictly followed during installation.

3.2 Assessment Per 22 CCR 66264.192(b) and 40 CFR 264.192(a)

(b) Owners or operators of new tank systems or components shall obtain and submit to the Department, at time of submittal of Part B information, a written assessment, reviewed and certified by an independent, qualified professional engineer, registered in California, in accordance with section 66270.11(d), attesting that the tank system has sufficient structural integrity and is acceptable for the transferring, storing and treating of hazardous waste and that the tanks and containment system are suitably designed to achieve the requirements in this article. The assessment shall show that the foundation, structural support, seams, connections, and pressure controls (if applicable) are adequately designed and that the tank system has sufficient structural strength, compatibility with the waste(s) to be transferred, stored or treated, and corrosion protection to ensure that it will not collapse, rupture, or fail. This assessment, which

will be used by the Department to review and approve or disapprove the acceptability of the tank system design, shall also include, at a minimum, the following information:

(1) design standard(s) according to which tank(s) and/or the ancillary equipment are constructed

Design standards for the tanks are described in Section 3.1. In addition, ancillary equipment was installed according to Safety-Kleen specifications that include API 1615 and NFPA Titles 30 and 31 standards. Piping to and from the new tanks were constructed of carbon steel with flexible secondary containment piping. Swing joints were installed where underground piping connected with aboveground piping to the adjacent building. A submerged pumping system has been installed within a containment sump of the product tank in conformance with NFPA Title 30A. No pumping system is installed in the waste tank. Leak detection systems were installed in accordance with manufacturers' specifications and tested before finalization of the installation. The installation for the tanks and ancillary equipment are in accordance with the Design Assessment.

(2) hazardous characteristics of the waste(s) to be handled

Both tanks will contain mineral spirits. Mineral spirits is a liquid with a boiling point of greater than 304^{0}F and a flash point of 105^{0}F to 140^{0}F. Mineral spirits vapor of approximately 2mm Hg and a lower explosive limit of 0.8% in air. As stated in the Design Assessment, mineral spirits is reportedly only incompatible with strong oxidizers and reactive metals, and thus, there is no incompatibility of the tanks with their contents.

(3) for new tank systems or components in which the external shell of a metal tank or any external metal component of the tank system will be in contact with the soil or with water, a determination by a corrosion expert of:

(A) factors affecting the potential for corrosion...

(B) the type and degree of external corrosion protection that are needed to ensure the integrity of the tank system during the use of the tank system or component...

Groundwater at the site occurs at approximately 30 feet subgrade. Corrosion protection plan was generated by Farwest Corrosion Control Company (Appendix C). This plan called for a cathodic protection system that was implemented during the installation of the tank. The UST itself has been protected in addition with a fiberglass resin coating previously described. Factors affecting the potential for corrosion are included in Appendix C. The type and degree of external protection are also included in Appendix C.

(4) For underground tank system components that are likely to be adversely affected by vehicular traffic, a determination of design or operational measures that will protect the tank system against potential damage.

After all below grade piping and electrical components were installed and inspected, the excavation was backfilled to within 18 inches of the ground surface. A 1-foot lift of base rock was placed on the backfill and compacted. The surface was completed with a 6-inch concrete slab reinforced with #4 re-bar. The facility traffic flow was factored into the design specifications for tank depth and concrete pad. The USTs were installed so the tops of the tanks are 4-feet below ground surface. This reinforcement was designed to allow tank truck traffic above the USTs and fulfills the design requirements outlined in the Preconstruction Assessment.

(5) design considerations to ensure that

(A) tank foundations will maintain the load of a full tank.

(B) tank systems will be anchored to prevent flotation or dislodgement where the tank system is placed in a saturated zone, or is located within a seismic fault zone subject to the standards of section 66264.189a), and

(C) tank systems will withstand the effects of frost heave

A uniform tank foundation of granular compacted bedding and backfill was installed to maintain and support the load of a full tank as specified in the Design Assessment. Due to the climate in the Los Angeles, California area, frost is not considered problematic due to the 4-foot burial depth of the USTs in comparison to the low regional frost depth of 2-inches. Groundwater at the site occurs at a depth of 30 feet, substantially below the bottom of the tank excavation; therefore, floatation is not considered a concern. However, concrete deadmen were cast on-site and placed on each side of the excavation. Re-bar straps were embedded in each deadman for connection to the hold-down straps. These installation features exceed anchoring standards for tanks as outlined in API 1615. As outlined in Section 3.1, seismic activity is not a concern for this facility.

(6) those design requirements and factors listed in subsection (a) of this section

Design requirements are addressed under Section 3.1 and preceding subsections of 3.2 of this report.

3.3 Assessment Per 22 CCR 66264.192(c) and 40 CFR 264.192(b)

The owner or operator of a new tank system shall ensure that proper handling procedures are adhered to in order to prevent damage to the system during installation. Prior to covering, enclosing, or placing a new tank system or component in use, an independent, qualified installation inspector or an independent, qualified professional engineer, registered in California, either of whom is trained and experienced in the proper installation of tank system components, shall inspect the system for the presence of any of the following items

(1) weld breaks

(2) punctures

(3) scrapes of protective coatings

(4) cracks

(5) corrosion

(6) other structural damage or inadequate construction/installation.

All discrepancies shall be remedied before the tank system is covered, enclosed, or placed in use.

The waste UST was delivered with a vacuum in the interstitial space measuring 11 inches of mercury. The product UST was delivered with a vacuum in the interstitial space measuring 5.5 inches of mercury. Both internal tanks were at atmospheric pressure. It is assumed that any weld breaks or punctures would break this vacuum. Additionally, a visual inspection was performed on the tanks by the engineer per Geraghty and Miller. An inspector from the LACFD was also present for the tank replacement. No corrosion, scraps, cracks or punctures were found on the external shell. The tanks were unloaded using a crane and suspended over bare ground for the Holiday testing. The fiberglass coating integrity test was accomplished by grounding the secondary containment tank, applying 35,000 volts to the steel secondary tank, and passing a T-shaped probe over the entire exterior surface of the tank. Any crack or opening in the coating would cause a spark when the conductive paddle was passed over that location. The integrity test showed that no cracks or holes were present.

3.4 ASSESSMENT PER 22 CCR 66264.192(d) AND 40 CFR 264.192(c)

New tank systems or components that are placed underground and that are backfilled shall be provided with a backfill material that is non-corrosive, porous, homogeneous substance and that is installed so that the backfill is placed completely around the tank and compacted to ensure that the tank and piping are fully and uniformly supported.

As shown in the photographs included in Appendix A, the excavation was filled with pea gravel to within 18 inches of ground surface. The top layer was leveled and compacted before installation of the concrete pad to ensure that the tank and piping are fully and uniformly supported.

3.5 ASSESSMENT PER 22 CCR 66264.192(e) AND 40 CRT 264.192(d)

All new tanks and ancillary equipment must be tested for tightness prior to being covered, enclosed, or placed in use. If a tank system is found not to be tight, all repairs necessary to remedy the leak(s) in the system must be performed prior to the tank system being covered, enclosed, or placed into use.

Tanks were tested for tightness as described in the installation procedure in Section 2. Certified tank test results are included in Appendix D. The tank system was found to be free of leaks.

3.6 ASSESSMENT PER 22 CCR 66264.192(f) AND 40 CFR 264.192(e)

Ancillary equipment shall be supported and protected against physical damage and excessive stress due to settlement, vibration, expansion, or contraction.

Pumps for the system are located below ground in waterproof sumps. All electrical conduit and piping are installed in backfill beneath a six-inch concrete pad. The concrete pad was designed by TERA, Inc. of Houston to carry the vehicular loads expected at the site, and subsurface piping was installed below the compacted layer to further protect conduit and pipe from settlement and vibration. Leak detection equipment is located within the service center in a location protected from vehicular traffic. Subsurface vent and fill pipes surface adjacent to the service center within a small bermed area away from traffic on the site. Fill and vent pipes are connected at the surface with 45 degree connections to create swivel joints that are intended to allow expansion and contraction of subsurface piping without damage. The use of corrugated secondary containment pipe is intended to allow for expansion and contraction of the primary containment. Aboveground piping is supported no less than every 8 feet as specified in the Design Assessment.

3.7 ASSESSMENT PER 22 CCR 66264.192(g) AND 40 CFR 264.192(f)

The owner or operator shall provide the type and degree of corrosion protection recommended by an independent corrosion expert, based on the information provided under subsection (b)(3) of this section, or other corrosion protection if the Department believes other corrosion protection is necessary to ensure the integrity of the tank system during use of the tank system. The installation of a corrosion protection system that is field fabricated shall be supervised by an independent corrosion expert to ensure proper installation.

Groundwater at the site occurs at 30 feet bgs much below the bottom of the tank excavation. However, a corrosion protection plan was generated by Farwest Corrosion Control Company (Appendix C). This plan called for a cathodic protection system that was installed during the installation of the tank. The cathodic protection continuity test results are provided in Appendix C.

3.8 ASSESSMENT Per 22 CCR 66264.192(h) AND 40 CFR 264.192(g)

The owner or operator shall obtain and keep on file at the facility written statements by those persons required to certify the design of the tank system and supervise the installation of the tank system in accordance with the requirements of subsections (c) through (g) of this section, that attest that the tank system was properly designed and installed and that repairs, pursuant to subsections (c) and (e) of this section, were performed. These written statements shall also include the certification statement as required in section 66270.11(d) of this division.

A copy of this report, including the certification by the registered professional engineer, is to be kept on file at the facility. In addition, a copy of the Design Assessment report is to be kept on-site at the facility.

4.0 TANK SECONDARY CONTAINMENT ASSESSMENT

The tank secondary containment assessment has been prepared in compliance with Title 22 CCR 66264.193 and 40 CFR, Section 264.193. For brevity, items addressed in both the CCR and CFR, the text from the CCR has been used.

4.1 ASSESSMENT PER 22 CCR 66264.193(a) AND 40 CFR 264.193(a)

In order to prevent the release of hazardous waste or hazardous constituents to the environment, secondary containment that meets the requirements of this section shall be provided (except as provided in subsection (f) and (g) of this section):

(1) for all new tank systems or components, prior to their being put into service;

Secondary containment was included in the design of this storage system.

4.2 ASSESSMENT PER 22 CCR 66246.193(B) AND 40 CFR 264.193(B)

Secondary containment systems must be:

(1) designed, installed, and operated to prevent any migration of wastes or accumulated liquid out of the system to the soil, groundwater, or surface water at any time during the use of the tank systems, and

(2) capable of detecting and collecting releases and accumulated liquids until the collected material is removed.

The secondary containment on product and waste piping is designed to flow to collection sumps on top of the USTs. These sumps are each monitored with a leak detection probe

connected to the tank monitoring system. The sumps were leak tested with water by visual inspection during the installation after sealing of pipe entries.

4.3 ASSESSMENT PER 22 CCR 66264.193(C) AND 40 CFR 264.193(C)

To meet the requirements of subsection (b) of this section, secondary containment systems shall be at a minimum:

(1) constructed of or lined with materials that are compatible with the waste(s) to be placed in the tank system and shall have sufficient strength and thickness to prevent failure owing to pressure gradients (including static head and external hydrogeological forces), physical contact with the waste to which it is exposed, climatic conditions and the stress of daily operation (including stresses from nearby vehicular traffic).

(2) provided with a foundation or base underlying the tanks capable of providing support to the secondary containment system, resistance to pressure gradients above and below the system and capable of preventing failure due to settlement, compression or uplift. This base shall be free of cracks or gaps and sufficiently impervious to contain leaks, spills and accumulated precipitation until the collected material is detected and removed.

(3) provided with a leak detection system that is designed and operated so that it will detect the failure of either the primary or secondary containment structure or the presence of any release of hazardous waste or accumulated liquid in the secondary containment system within 24 hours, or at the earliest practicable time if the owner or operator can demonstrate to the Department that existing detection technologies or site conditions will not allow detection of a release within 24 hours, and

(4) sloped or otherwise designed or operated to drain and remove liquids resulting form leaks, spills or precipitation. Spilled or leaked waste and accumulated precipitation shall be removed from he secondary containment system within as timely a manner as it is

necessary to prevent overflow of the containment system, but within no more than 24 hours, or in as timely a manner as possible to prevent harm to human health and the environment, if the owner or operator can demonstrate to the Department that removal of the released waste or accumulated precipitation cannot be accomplished within 24 hours and that overflow of the containment system will not occur...

During installation, the slope of the secondary containment lines was verified with a level to slope back to the secondary containment sumps on top of the UST. The secondary containment integrity was tested with air at 5 psi for 30 minutes. After installation of the secondary containment pressure monitor, the leak detection system was tested and verified as operational. Results are attached as Appendix D.

4.4 ASSESSMENT PER 22 CCR 66264.193(d) AND 40 CFR 264.193(d)

Secondary containment for tanks shall include one or more of the following devices:

(1) a liner (external to the tank),

(2) a vault,

(3) a double walled-tank, or

(4) an equivalent device as approved by the Department.

The underground tanks installed at the Safety-Kleen site are double-wall steel tanks manufactured according to UL-58, UL-142, EPA 280.20, NFPA Titles 30 and 31, and the Uniform Fire Code. The design specified a double-wall steel tank with a fiberglass outer coating. The inner tank was constructed of 0.25-inch, hot-rolled, carbon steel. The outer tank was constructed of 7-gauge carbon steel with a 0.125-inch, (approximately 100 mils) fiberglass outer coating. The outer fiberglass coating consists of a fiberglass/resin coat and an additional seal coat of isophthalic resin.

4.5 ASSESSMENT PER 22 CCR 66264.193(e) AND 40 CFR 264.193(e)

In addition to the requirements of subsections (b), (c), and (d) of this section, secondary containment systems shall satisfy the following requirements...

(3) Double-walled tanks shall be:

(A) designed as an integral structure (i.e., an inner tank completely enveloped within an outer shell) so that any release from the inner tank is contained by the outer shell,

(B) protected, if constructed of metal, from both corrosion of the primary tank interior and of the external surface of the outer shell, and

(C) provided with a built-in continuous leak detection system capable of detecting a release within 24 hours, or at the earliest practicable time, if the owner or operator can demonstrate to the Department, and the Department concludes, that the existing detection technology or site conditions would not allow detection of a release within 24 hours.

The tanks and cathodic protection system were installed per Far West Corrosion Control Company (Appendix C). A Veeder-Root TLS-350 Tank Monitoring System was installed in the tank on September 29, 1993. The secondary containment of the tanks is designed as an integral structure (an inner tank completely enveloped within an outer shell) so that any release from the inner tank is contained within the outer shell.

4.6 ASSESSMENT PER 22 CCR 66264(f) AND CFR 264.193(f)

Ancillary equipment shall be provided with secondary containment (e.g., trench, jacketing, double-walled piping) that meets the requirements of subsections (b) and (c) of this section except for:

(1) aboveground piping (exclusive of flanges joints, valves and other connections) that are visually inspected for leaks on a daily basis;

(2) welded flanges, welded joints and welded connections, that are visually inspected for leaks on a daily basis;

(3) sealless or magnetic coupling pumps and sealless valves, that are visually inspected for leaks on a daily basis; and

(4) pressurized aboveground piping systems with automatic shut-off devices (e.g., excess flow check valves, flow metering shutdown devices, loss of pressure actuated shut-off devices) that are visually inspected for leaks on a daily basis.

All piping from the used-parts washing solvent handling area to the secondary containment sumps are secondarily contained. Secondary containment piping on the product pipe is continuous to the above-ground piping between the UST and the return-and-fill shelter. Aboveground waste and product piping within the return-and-fill shelter is inspected to verify tightness.

4.7 ASSESSMENT PER 22 CCR 66264.193(g)(h) and 40 CFR 264.193 (g)(h)

The owner or operator may obtain a variance from the requirements of this section for existing aboveground tanks in place, if the Department finds, as a result of a demonstration by the owner or operator that alternative design and operating practices, together with location characteristics, will prevent the migration of any hazardous waste or hazardous constituents into the groundwater or surface water at least as effectively as secondary containment during the active life of the tank system, or that in the event of a release that does migrate to groundwater or surface water, no substantial present or potential hazard will be posed a human health or the environment. New underground

tank systems may not, per a demonstration in accordance with paragraph (g)(2) of this section, be exempted from the secondary containment requirements of this section...

No variance was requested regarding this tank installation.

4.8 ASSESSMENT PER 22 CCR 66264(i) and 40 CFR 264.193(i)

All tank systems, until such time as secondary containment that meets the requirements of this section is provided, shall comply with the following:

(1) subsections (c)(2), (c)(4), (e)(1)(A), or (e)(2)(A) (except for tanks that do not contain free liquids), and (e)(1)(B) or (e)(2)(B);

(2) for nonenterable underground tanks, a leak tests that meets the requirements of section 66264l.191(c)(5) or other tank integrity method, as approved or required by the Department, shall be conducted at least annually;

(3) for other than nonenterable underground tanks, the owner or operator shall either conduct a leak test as in subsection (i)(2) of this section or develop a schedule and procedure for an assessment of the overall condition of the tank system by an independent, qualified professional engineer, registered in California, in accordance with section 66270.11(d). The schedule and procedure shall be adequate to detect obvious cracks, leaks, and corrosion or erosion that may lead to cracks and leaks. The owner or operator shall remove the stored waste from he tank, if necessary, to allow the condition of all internal tank surfaces to be assessed. The frequency of these assessments shall be based on the material of construction of the tank and its ancillary equipment, the age of the system, the type of corrosion or erosion protection used, the rate of corrosion or erosion observed during the previous inspection and the characteristics of the waste being stored or treated,

(4) for ancillary equipment, a leak test or other integrity assessment as approved by the Department shall be conducted at least annually,

(5) the owner or operator shall maintain on file at the facility a record of the results of the assessments conducted in accordance with subsection (i)(2) through (i)(4) of this section, and

(6) if a tank system or component is found to be leaking or unfit for use as a result of the leak test or assessment in subsections (i)(2) through (i)(4) of this section, the owner or operator shall comply with the requirements of section 66264.196.

This installation complies with the requirements of this section, therefore subsection (i) does not apply to this facility.

5.0 REFERENCES

TERA, Inc., June 1992. "Design Assessment, Proposed Used Solvent Storage Tank System, Los Angeles, California."

Title 22, California Code of Regulations (22CCR)

Title 40, Code of Federal Regulations (40 CFR)

American Petroleum Institute (API) Recommended Practices, (615)

Title 349, National Fire Protection Association (NFPA)

Title 30, 30A, 31, National Fire Protection Association (NFPA)

Uniform Fire Code

safeklee\losangel\skrptla.309

PROFESSIONAL CERTIFICATION

I certify that this document (Underground Storage Tanks Installation Report, Safety-Kleen Branch Service Center, 2918 Worthern Avenue, Los Angeles, California, November 1993) was prepared under my direction or supervision in accordance with a system designed to assure that qualified personnel properly gathered and evaluated the information submitted. Based on my inquiry of the person or persons who manage the system, or those persons directly responsible for gathering the information, the information submitted is, to the best of my knowledge and belief, true, accurate, and complete.

Frank J. Johns, II, P.E.

Registered Civil Engineer, #C-29313
Principal Engineer and Senior Associate
Geraghty & Miller, Inc.

REGISTERED PROFESSIONAL ENGINEER
FRANK J. JOHNS, II
No. 29313
CIVIL
STATE OF CALIFORNIA
11-22-93

APPENDIX IV-4

VEEDER-ROOT UST MONITORING SYSTEM INFORMATION

Safety-Kleen Systems, Inc (CERSID: 10145851)

Facility Information Submitted Feb 20, 2019

Submitted on 2/20/2019 11:29:51 AM by *Nahid Toossi* of Safety-Kleen Systems, Inc (Plano, Texas)

- Business Activities
- Business Owner/Operator Identification

Underground Storage Tanks Submitted Feb 20, 2019

Submitted on 2/20/2019 11:29:51 AM by *Nahid Toossi* of Safety-Kleen Systems, Inc (Plano, Texas)

- UST Facility Operating Permit Application
- UST Tank Information/Monitoring Plan - Tank ID #1
- UST Tank Information/Monitoring Plan - Tank ID #2
- UST Monitoring Site Plan
  - *UST Monitoring Site Plan* (MS Word, 563KB)
- UST Certification of Financial Responsibility
  - *UST Certification of Financial Responsibility* (Adobe PDF, 301KB)
- UST Response Plan
  - *UST Response Plan* (MS Word, 81KB)
- UST Owner/Operator: Written Agreement
  - Owner and operator are same.
- Owner Statement of Designated UST Operator Compliance
  - *Owner Statement of Designated UST Operator Compliance* (MS Word, 44KB)

Site Identification

Safety-Kleen Systems, Inc
2918 Worthen Ave
Los Angeles, CA 90039
County
Los Angeles

CERS ID
10145851
EPA ID Number
CAT000613935

Submittal Status

Submitted on 2/20/2019 by *Nahid Toossi* of Safety-Kleen Systems, Inc (Plano, Texas)

Hazardous Materials

Does your facility have on site (for any purpose) at any one time, hazardous materials at or above 55 gallons for liquids, 500 pounds for solids, or 200 cubic feet for compressed gases (include liquids in ASTs and USTs); or is regulated under more restrictive inventory local reporting requirements (shown below if present); or the applicable Federal threshold quantity for an extremely hazardous substance specified in 40 CFR Part 355, Appendix A or B; or handle radiological materials in quantities for which an emergency plan is required pursuant to 10 CFR Parts 30, 40 or 70?	Yes

Underground Storage Tank(s) (UST)

Does your facility own or operate underground storage tanks?	Yes

Hazardous Waste

Is your facility a Hazardous Waste Generator?	Yes
Does your facility treat hazardous waste on-site?	No
Is your facility's treatment subject to financial assurance requirements (for Permit by Rule and Conditional Authorization)?	No
Does your facility consolidate hazardous waste generated at a remote site?	No
Does your facility need to report the closure/removal of a tank that was classified as hazardous waste and cleaned on-site?	No
Does your facility generate in any single calendar month 1,000 kilograms (kg) (2,200 pounds) or more of federal RCRA hazardous waste, or generate in any single calendar month, or accumulate at any time, 1 kg (2.2 pounds) of RCRA acute hazardous waste; or generate or accumulate at any time more than 100 kg (220 pounds) of spill cleanup materials contaminated with RCRA acute hazardous waste.	No
Is your facility a Household Hazardous Waste (HHW) Collection site?	No

Excluded and/or Exempted Materials

Does your facility recycle more than 100 kg/month of excluded or exempted recyclable materials (per HSC 25143.2)?	No
Does your facility own or operate ASTs above these thresholds? Store greater than 1,320 gallons of petroleum products (new or used) in aboveground tanks or containers.	Yes
Does your facility have Regulated Substances stored onsite in quantities greater than the threshold quantities established by the California Accidental Release prevention Program (CalARP)?	No

Additional Information

No additional comments provided.

Facility/Site

Safety-Kleen Systems, Inc
2918 Worthen Ave
Los Angeles, CA 90039

CERS ID
10145851

Submittal Status

Submitted on 2/20/2019 by *Nahid Toossi* of Safety-Kleen Systems, Inc (Plano, Texas)

Identification

Safety-Kleen Systems, Inc.

Operator Phone	Business Phone	Business Fax
(323) 660-9562	(323) 660-9562	(323) 660-2075

Beginning Date	Ending Date	
Dun & Bradstreet	**SIC Code**	**Primary NAICS**
051060408	4953	

Facility/Site Mailing Address

2918 Worthen Ave
Los Angeles, CA 90039

Primary Emergency Contact

Gabriel Medel
Title
Branch General Manager

Business Phone	24-Hour Phone	Pager Number
(323) 660-9562	(323) 595-1478	

Owner

Safety-Kleen Systems, Inc.
(972) 265-2000
2600 North Central Expressway
Richardson, TX 75080

Secondary Emergency Contact

Rudy Galindo
Title
Market Sales Specialist

Business Phone	24-Hour Phone	Pager Number
(323) 660-9562	(323) 854-1939	

Billing Contact

Gabriel Medel
(323) 660-9562 gabriel.medel@safety-kleen.com
2918 Worthen Ave
Los Angeles, CA 90039

Environmental Contact

Nahid Toossi
(714) 429-4355 nahid.toossi@safety-kleen.com
2120 South Yale Street
Santa Ana, CA 92704

Name of Signer	Signer Title	Document Preparer
Nahid Toossi	Director Environmental Compliance	Nahid Toossi

Additional Information

Locally-collected Fields

Some or all of the following fields may be required by your local regulator(s).

Property Owner

Safety-Kleen Systems, Inc.
Phone
(972) 265-2000
Mailing Address
2600 North Central Expressway
Richardson, TX 75080

Assessor Parcel Number (APN)

Number of Employees
27

Facility ID
FA0002149

Facility/Site

Safety-Kleen Systems, Inc
2918 Worthen Ave
Los Angeles, CA 90039

CERS ID
10145851

Submittal Status

Submitted on 2/20/2019 by *Nahid Toossi* of Safety-Kleen Systems, Inc (Plano, Texas)

Type of Action

Transfer Permit

Facility Information

Safety-Kleen Systems, Inc
2918 Worthen Ave
Los Angeles, CA 90039

Facility Type
Other

Board of Equalization Account Number
44027812

Is the facility located on Indian Reservation/Trust lands?
No

Tank Operator

Safety-Kleen Systems, Inc.
(323) 984-9528
2918 Worthen Avenue
Los Angeles, CA 90039

Property Owner

Safety-Kleen Systems, Inc.
(972) 265-2000
2600 North Central Expressway
Richardson, TX 75080

Tank Owner

Safety-Kleen Systems, Inc.
(972) 265-2000
2600 North Central Expressway
Richardson, TX 75080

Tank Owner Type
Non-Government

Permit Holder Information

Permit Holder Notification Information
Tank Owner

Supervisor of Division, Section, or Office (Required for Public Agencies Only)

Financial Responsibility Mechanism(s)

Indicate which approved mechanism(s) are being used to show financial responsibility either as contained in the federal regulations (40 CFR, Part 280, Subpart H, Sections 280.93 through 280.107) or CCR, Title 23, Division 3, Chapter 18, Section 2808.1.

Self-Insured	Surety Bond	State Fund and CFO Letter	Other Mechanism
Guarantee	Letter of Credit	State Fund and CD	
Insurance **Yes**	Exemption	Local Government Mechanism	

Facility/Site

Safety-Kleen Systems, Inc
2918 Worthen Ave
Los Angeles, CA 90039

CERS ID
10145851
Tank ID#: 1

Submittal Status

Submitted on 2/20/2019 by *Nahid Toossi* of Safety-Kleen Systems, Inc (Plano, Texas)

Type of Action

Type of Action (UST Tank)
Confirmed/Updated Information

Facility Information

Safety-Kleen Systems, Inc
2918 Worthen Ave
Los Angeles, CA 90039

Tank Description

Tank ID#	Date UST System Installed	Tank Configuration
1	1/1/1994	A Stand-alone Tank
Tank Manufacturer	**Date Existing UST Discovered**	**Number of Compartments in the Unit**
MODERN WELDING		1
Tank Capacity In Gallons	**Date UST Permanently Closed**	**Additional Description**
12000		

Tank Use and Contents

Tank Use
Hazardous Waste (includes used oil)

Tank Contents
Other Non-petroleum

Other Petroleum Contents
AQUEOUS PARTS WASHER WASTE

Other Non-Petroleum Contents

Tank Construction

Type of Tank
Double Wall

Primary Containment	Secondary Containment
Steel	Fiberglass
Steel Clad w/ Fiberglass	Steel Clad w/ Fiberglass

Overfill Protection

Yes	Audible/Visual Alarms	Fill Tube Shut-Off Valve
Yes	Ball Float	Exempt

Product / Waste Piping Construction

Piping Construction	Primary Containment	Secondary Containment	Piping/Turbine Containment Sump
Double-walled	Fiberglass	Fiberglass	Single-walled
Piping System Type			
Gravity			

Vent, Vapor Recovery (VR) and Riser / Fill Pipe Piping Construction

Primary Containment	Vapor Recovery Primary Containment	Riser Pipe Primary Containment	Vent Piping Transition Sumps
Steel	None	Fiberglass	None
Secondary Containment	**Vapor Recovery Secondary Containment**	**Riser Pipe Secondary Containment**	**Fill Components Installed**
None	None	Fiberglass	Yes Spill Bucket
			Yes Striker Plate/Bottom Protector
			Yes Containment Sump

Under Dispenser Containment (UDC)

Construction Type	Construction Material
Single-walled	Concrete

Corrosion Protection

Yes	Sacrificial Anode
	Impressed Current
	Isolation

Facility/Site

Safety-Kleen Systems, Inc
2918 Worthen Ave
Los Angeles, CA 90039

UST Tank # 1

CERS ID **10145851**

Tank Info: Installed Date: 1/1/1994 12:00:00 AM - Tank Use: Hazardous Waste (includes used oil) - Tank Contents: Other Non-petroleum - Type Of Tank: Double Wall - Piping Construction: Double-walled

Submittal Status

Submitted on 2/20/2019 by *Nahid Toossi* of Safety-Kleen Systems, Inc (Plano, Texas)

Facility Information

Safety-Kleen Systems, Inc
2918 Worthen Ave
Los Angeles, CA 90039

Equipment Testing and Preventive Maintenance

Monitoring Equipment Serviced
Annually

Monitoring Locations

Site Plot Plan Submitted
Site Plan Previously Submitted

Tank Monitoring is Performed Using the Following Method(s)

Yes Continuous Electronic Tank Monitoring

Secondary Containment System
Dry

Monitor Panel Manufacturer
Veeder-Root

Monitor Panel Model
TLS 350

Leak Sensor Manufacturer
Veeder-Root

Leak Sensor Model #
VR 420

Automatic Tank Gauging

ATG Panel Manufacturer

In-Tank Probe Manufacturer

Leak Test Frequency
Continuous

Programmed Tank Tests

ATG Model #

In-tank Probe Model

Monthly Statistical Inventory Reconciliation

Weekly Manual Tank Gauge

Tank Gauging Test Period

Tank Integrity Testing

Tank Integrity Testing Frequency

Yes Other Monitoring
Every 3 years certified by CA PE

Facility/Site

Safety-Kleen Systems, Inc
2918 Worthen Ave
Los Angeles, CA 90039

UST Tank # 1
CERS ID **10145851**

Tank Info: Installed Date: 1/1/1994 12:00:00 AM - Tank Use: Hazardous Waste (includes used oil) - Tank Contents: Other Non-petroleum - Type Of Tank: Double Wall - Piping Construction: Double-walled

Pipe Monitoring is Performed Using the Following Method(s)

Yes Continuous Monitoring of Piping Secondary Containment

Piping Secondary Containment: Dry
Panel Manufacturer: Veeder-Root
Panel Model #: TLS 350
Leak Sensor Manufacturer: Veeder-Root
Leak Sensor Model #: VR 205, 208

Yes Leak Alarm Triggers Automatic Pump Shutdown
Yes Failure/Disconnect Triggers Pump Shutdown

Mechanical Line Leak Detector Performs 3 GPH Leak Test

MLLD Manufacturer: VMI
MLLD Model: LD 2000

Electronic Line Leak Detector Performs 3 GPH Leak Test

ELLD Manufacturer
ELLD Programmed In-Line Testing
ELLD Triggers Automatic Pump Shutdown
ELLD Model
ELLD Failure/Disconnect Triggers Automatic Shutdown

Pipeline Integrity Testing
Visual Pipeline Monitoring
Pipeline Integrity Testing Frequency
Visual Pipeline Monitoring Frequency

Suction Piping Meets Exemption Criteria

No Regulated Piping Per Health and Safety Code, Division 20, Chapter 6.7 Is Connected To The Tank System

Yes Other Pipeline Monitoring
Daily Visual Monitoring for above ground piping

Under Dispenser Containment (UDC) Monitoring

UDC Monitoring
Other
Visual
UDC Panel Manufacturer
UDC Panel Model #
UDC Leak Sensor Manufacturer
UDC Leak Sensor Model

Detection of Leak into UDC Triggers Audible and Visual Alarms
UDC Leak Alarm Triggers Automatic Pump Shutdown
Failure/Disconnection of UDC Monitoring System Triggers Automatic Pump Shutdown
UDC Monitoring Stops Flow of Product at Dispenser
UDC Construction
UDC Secondary Containment Monitoring
Leak Within Secondary Containment of UDC Causes Audible and Visual Alarms

Periodic System Testing

ELD Testing
Yes Secondary Containment Testing
Yes Spill Bucket Testing

Facility/Site

Safety-Kleen Systems, Inc
2918 Worthen Ave
Los Angeles, CA 90039

UST Tank # 1

CERS ID **10145851**

Tank Info: Installed Date: 1/1/1994 12:00:00 AM - Tank Use: Hazardous Waste (includes used oil) - Tank Contents: Other Non-petroleum - Type Of Tank: Double Wall - Piping Construction: Double-walled

Recordkeeping

Yes	Alarm Logs
Yes	Visual Inspection Records
Yes	Tank Integrity Testing Results
	SIR Testing Results
Yes	Tank Gauging Results
Yes	ATG Testing Results
Yes	Corrosion Protection Logs
Yes	Equipment Maintenance and Calibration Records

Training

Yes Personnel with UST Monitoring Responsibilities are Familiar with Training Documents

Specify Other Training Documents

Yes Designated Operator Training

Comments / Additional Information

Comments and Additional Information

Personnel Responsibilities

Name of First Person Having Responsibility	Name of Second Person Having Responsibility
Gabriel Medel	
Title of First Person Having Responsibility	**Title of Second Person Having Responsibility**
Branch General Manager	

Facility/Site

Safety-Kleen Systems, Inc
2918 Worthen Ave
Los Angeles, CA 90039

CERS ID
10145851
Tank ID#: 2

Submittal Status

Submitted on 2/20/2019 by *Nahid Toossi* of Safety-Kleen Systems, Inc (Plano, Texas)

Type of Action

Type of Action (UST Tank)
Confirmed/Updated Information

Facility Information

Safety-Kleen Systems, Inc
2918 Worthen Ave
Los Angeles, CA 90039

Tank Description

Tank ID#	Date UST System Installed	Tank Configuration
2	1/1/1994	A Stand-alone Tank
Tank Manufacturer	**Date Existing UST Discovered**	**Number of Compartments in the Unit**
MODERN WELDING		1
Tank Capacity In Gallons	**Date UST Permanently Closed**	**Additional Description**
12000		

Tank Use and Contents

Tank Use
Chemical Product Storage

Tank Contents
Other Non-petroleum

Other Petroleum Contents
4-in-1 Concentrate Product

Other Non-Petroleum Contents

Tank Construction

Type of Tank
Double Wall

Primary Containment
Steel
Steel Clad w/ Fiberglass

Secondary Containment
Fiberglass
Steel Clad w/ Fiberglass

Overfill Protection
Yes Audible/Visual Alarms
Yes Ball Float
Yes Fill Tube Shut-Off Valve
Exempt

Product / Waste Piping Construction

Piping Construction	Primary Containment	Secondary Containment	Piping/Turbine Containment Sump
Double-walled	Fiberglass	Fiberglass	Single-walled
Piping System Type			
Pressure			

Vent, Vapor Recovery (VR) and Riser / Fill Pipe Piping Construction

Primary Containment	Vapor Recovery Primary Containment	Riser Pipe Primary Containment	Vent Piping Transition Sumps
Steel	None	Steel	None
Secondary Containment	**Vapor Recovery Secondary Containment**	**Riser Pipe Secondary Containment**	**Fill Components Installed**
None	None	Fiberglass	Yes Spill Bucket
			Yes Striker Plate/Bottom Protector
			Yes Containment Sump

Under Dispenser Containment (UDC)

Construction Type
Single-walled

Construction Material
Concrete

Corrosion Protection

Yes Sacrificial Anode
Impressed Current
Isolation

Facility/Site

Safety-Kleen Systems, Inc
2918 Worthen Ave
Los Angeles, CA 90039

UST Tank # 2

CERS ID **10145851**

Tank Info: Installed Date: 1/1/1994 12:00:00 AM - Tank Use: Chemical Product Storage - Tank Contents: Other Non-petroleum - Type Of Tank: Double Wall - Piping Construction: Double-walled

Submittal Status

Submitted on 2/20/2019 by *Nahid Toossi* of Safety-Kleen Systems, Inc (Plano, Texas)

Facility Information

Safety-Kleen Systems, Inc
2918 Worthen Ave
Los Angeles, CA 90039

Equipment Testing and Preventive Maintenance

Monitoring Equipment Serviced
Annually

Monitoring Locations

Site Plot Plan Submitted
Site Plan Previously Submitted

Tank Monitoring is Performed Using the Following Method(s)

Yes Continuous Electronic Tank Monitoring

Secondary Containment System
Dry

Monitor Panel Manufacturer
Veeder-Root

Monitor Panel Model
TLS 350

Leak Sensor Manufacturer
Veeder-Root

Leak Sensor Model #
VR 420

Automatic Tank Gauging

ATG Panel Manufacturer

In-Tank Probe Manufacturer

Leak Test Frequency

Programmed Tank Tests

ATG Model #

In-tank Probe Model

Monthly Statistical Inventory Reconciliation

Weekly Manual Tank Gauge

Tank Gauging Test Period

Tank Integrity Testing

Tank Integrity Testing Frequency

Other Monitoring

Facility/Site

Safety-Kleen Systems, Inc
2918 Worthen Ave
Los Angeles, CA 90039

UST Tank # 2
CERS ID **10145851**

Tank Info: Installed Date: 1/1/1994 12:00:00 AM - Tank Use: Chemical Product Storage - Tank Contents: Other Non-petroleum - Type Of Tank: Double Wall - Piping Construction: Double-walled

Pipe Monitoring is Performed Using the Following Method(s)

Yes Continuous Monitoring of Piping Secondary Containment

Piping Secondary Containment: Dry
Panel Manufacturer: Veeder-Root
Panel Model #: TLS 350
Leak Sensor Manufacturer: Veeder-Root
Leak Sensor Model #: VR 205, 208

Yes Leak Alarm Triggers Automatic Pump Shutdown
Yes Failure/Disconnect Triggers Pump Shutdown

Yes Mechanical Line Leak Detector Performs 3 GPH Leak Test
MLLD Manufacturer: Red Jacket
MLLD Model: FX1DV

Electronic Line Leak Detector Performs 3 GPH Leak Test

ELLD Manufacturer
ELLD Programmed In-Line Testing
ELLD Triggers Automatic Pump Shutdown
ELLD Model
ELLD Failure/Disconnect Triggers Automatic Shutdown

Pipeline Integrity Testing
Visual Pipeline Monitoring
Pipeline Integrity Testing Frequency
Visual Pipeline Monitoring Frequency

Suction Piping Meets Exemption Criteria

No Regulated Piping Per Health and Safety Code, Division 20, Chapter 6.7 Is Connected To The Tank System

Yes Other Pipeline Monitoring
Daily Visual Monitoring is only for above ground piing.

Under Dispenser Containment (UDC) Monitoring

UDC Monitoring: No Dispensers
Visual
UDC Panel Manufacturer: NA
UDC Panel Model #: NA
UDC Leak Sensor Manufacturer: NA
UDC Leak Sensor Model: NA

Detection of Leak into UDC Triggers Audible and Visual Alarms
UDC Leak Alarm Triggers Automatic Pump Shutdown
Failure/Disconnection of UDC Monitoring System Triggers Automatic Pump Shutdown
UDC Monitoring Stops Flow of Product at Dispenser
UDC Construction
UDC Secondary Containment Monitoring
Leak Within Secondary Containment of UDC Causes Audible and Visual Alarms

Periodic System Testing

ELD Testing
Yes Secondary Containment Testing
Yes Spill Bucket Testing

Facility/Site

Safety-Kleen Systems, Inc
2918 Worthen Ave
Los Angeles, CA 90039

UST Tank # 2

CERS ID **10145851**

Tank Info: Installed Date: 1/1/1994 12:00:00 AM - Tank Use: Chemical Product Storage - Tank Contents: Other Non-petroleum - Type Of Tank: Double Wall - Piping Construction: Double-walled

Recordkeeping

Yes	Alarm Logs
Yes	Visual Inspection Records
Yes	Tank Integrity Testing Results
	SIR Testing Results
	Tank Gauging Results
Yes	ATG Testing Results
Yes	Corrosion Protection Logs
Yes	Equipment Maintenance and Calibration Records

Training

Yes Personnel with UST Monitoring Responsibilities are Familiar with Training Documents

Specify Other Training Documents

Yes Designated Operator Training

Comments / Additional Information

Comments and Additional Information

Personnel Responsibilities

Name of First Person Having Responsibility	Name of Second Person Having Responsibility
Gabriel Medel	
Title of First Person Having Responsibility	**Title of Second Person Having Responsibility**
Branch General Manager	

State of California
State Water Resources Control Board
Division of Financial Assistance
P.O. Box 944212
Sacramento, CA 94244-2121
(Instructions on reverse side)

For State Use Only

CERTIFICATION OF FINANCIAL RESPONSIBILITY

FOR UNDERGROUND STORAGE TANKS CONTAINING PETROLEUM

A. I am required to demonstrate Financial Responsibility in the required amounts as specified in California Code of Regulations (CCR), Title 23, Division 3, Chapter 18, Section 2807,

☐ 500,000 dollars per occurrence
or
☒ 1 million dollars per occurrence

AND

☐ 1 million dollars annual aggregate
or
☒ 2 million dollars annual aggregate

B. _____ *hereby certifies that it is in compliance with the requirements of Section 2807,*
(Name of Tank Owner or Operator)
California Code of Regulations, Title 23, Division 3, Chapter 18, Article 3, Section 2807.
The mechanisms used to demonstrate financial responsibility as required by Section 2807 are as follows:

C. Mechanism Type	Name and Address of Issuer	Mechanism Number	Coverage Amount	Coverage Period	Corrective Action	Third Party Comp
INSURANCE	INDIAN HARBOR INSURANCE Co, 70 SEAVIEW AVE STAMFORD, CT 06902	PEC 0042 03905	$1M/OCCUR $2M/AGG	11/1/18 - 11/1/19 ~~YES~~	YES	YES

Note:

Note: If you are using the State Fund as any part of your demonstration of financial responsibility, your execution and submission of this certification also certifies that you are in compliance and shall maintain compliance with all conditions for participation in the Fund. See instructions.

D. Facility Name	Facility Address
SAFETY-KLEEN SYSTEMS INC	SEE ATTACHED
Facility Name	Facility Address
Facility Name	Facility Address

E. Signature of Tank Owner or Operator	Date	Name and Title of Tank Owner or Operator
	11/9/18	LOUIS PRANSKY VP RISK MANAGEMENT
Signature of Witness or Notary	**Date**	**Name of Witness or Notary**
	11/9/18	Nathaniel J Wilkins

FIGURE IV-1

CONTAINER CONFIGURASTIONS IN DRUM STORAGE AREAS

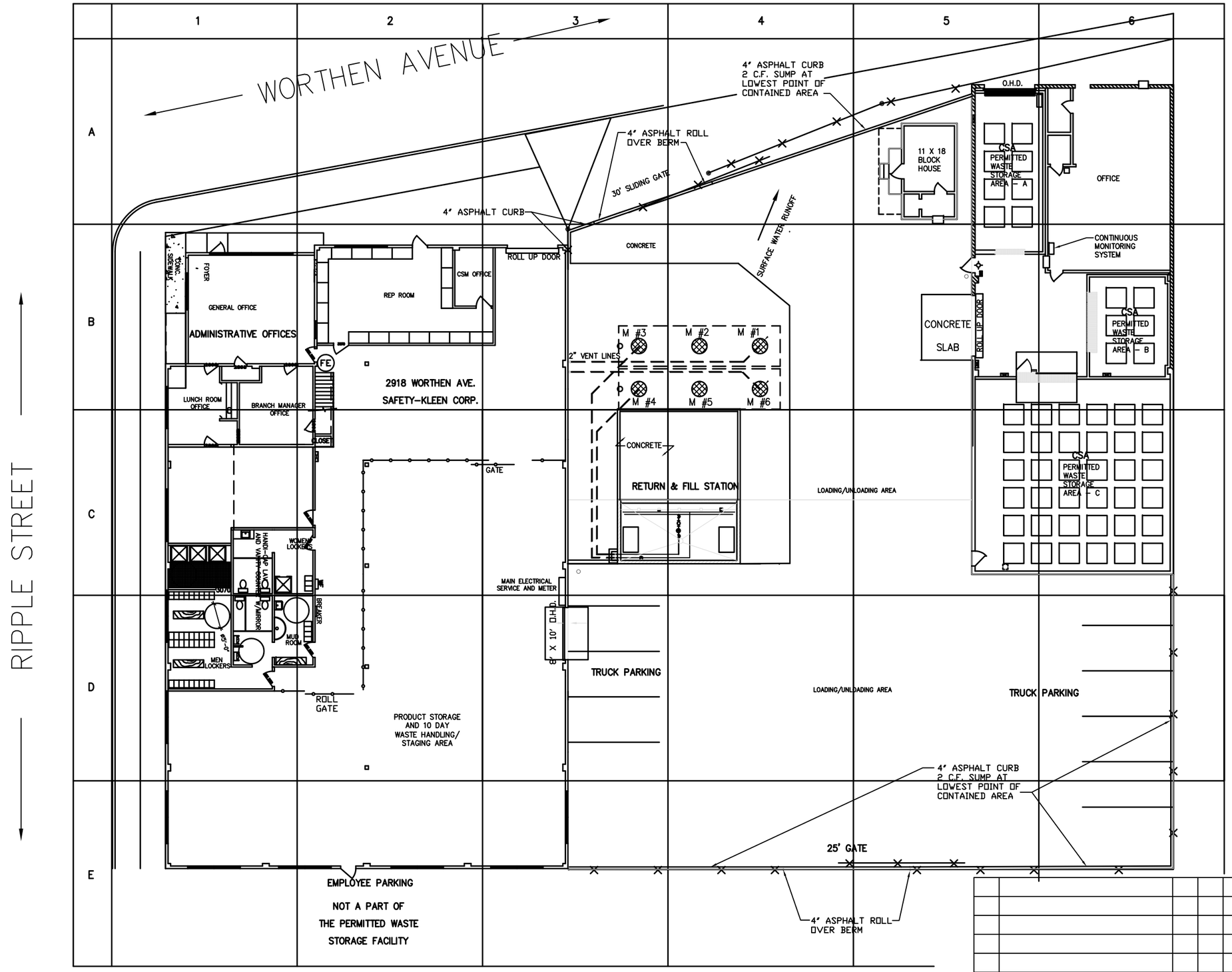

FIGURE IV-1

PROPRIETARY STATEMENT

THIS DRAWING IS THE EXCLUSIVE PROPERTY OF SAFETY-KLEEN SYSTEMS, INC. AND IS PROPRIETARY AND CONFIDENTIAL INFORMATION. THIS DRAWING AND THE INFORMATION CONTAINED THEREIN MUST NOT BE DUPLICATED, USED, DIVULGED, REPRODUCED, COPIED, DISCLOSED OR APPROPRIATED IN WHOLE OR IN PART FOR ANY PURPOSE OTHER THAT AS EXPRESSLY AUTHORIZED BY SAFETY-KLEEN SYSTEMS, INC. THIS DRAWING MUST BE RETURNED PROMPTLY UPON REQUEST.

TITLE

CONTAINER CONFIGURATION IN DRUM STORAGE AREAS

NO.	DESCRIPTION	BY	CHK	APPR	DATE
A	ADD CONTINUOUS MONITORING SYSTEM	JEK	NT	NT	022219
01	REVISED FOR PERMIT	JEK	NT	NT	072518
00	NEW ISSUE FOR PERMIT	JEK	NT	NT	071018

REVISIONS

SAFETY-KLEEN SYSTEMS, INC.
2600 N. CENT. EXPRESSWAY STE 400 RICHARDSON, TX. 75080
PHONE 800-669-5740

SCALE	BY	CHKD	P.E. APPR	OP. APPR	DATE
1"=10'	JEK	NT	NT	NT	7/10/18

SERVICE CENTER BRANCH AT: LOS ANGELES, CA

STD-DWG-REV NO.: 7116-SP00-009

FIGURE IV-2

RETURN AND FILL (R&F) Station PIPING SCHEMATIC

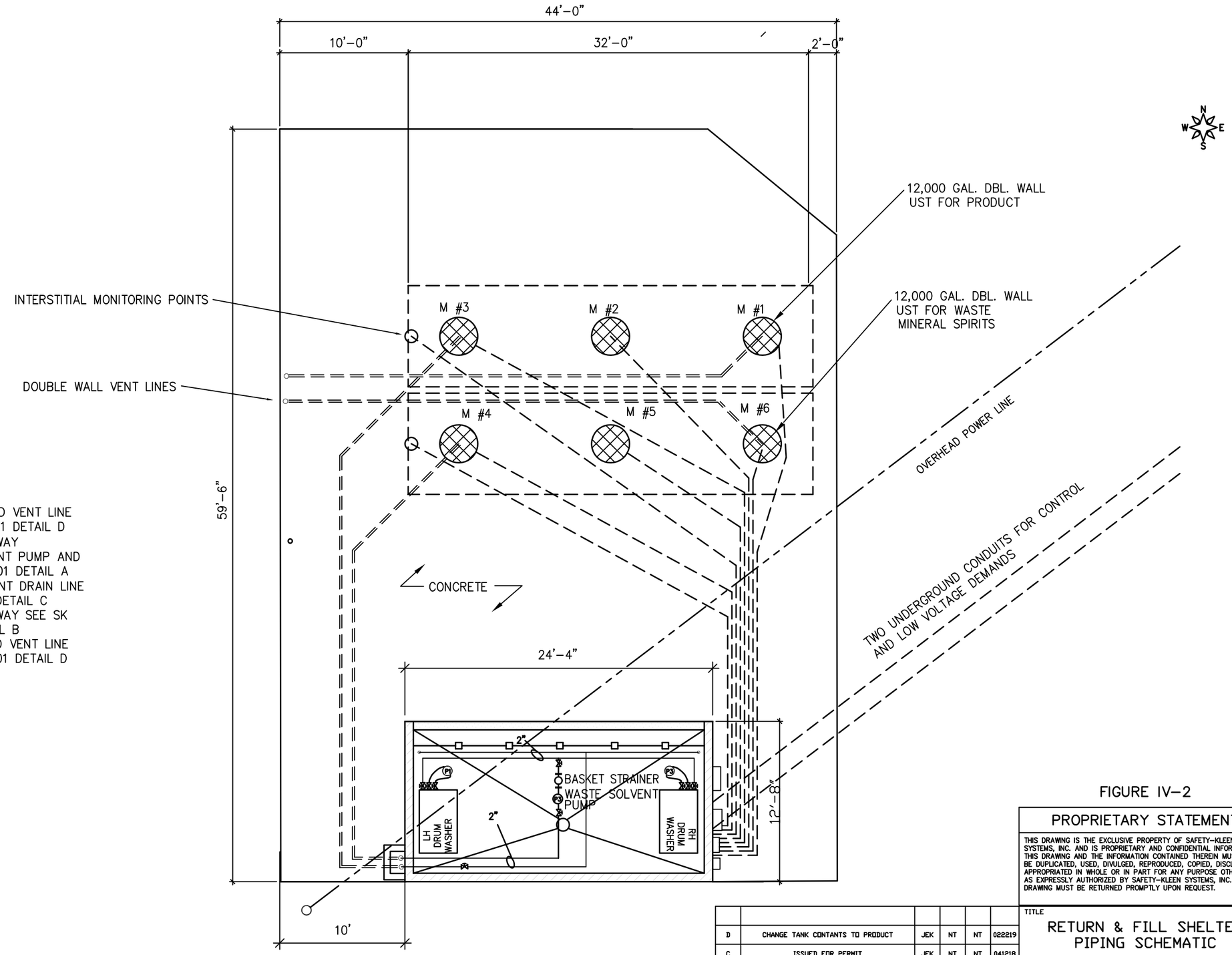

MANWAY SCHEDULE
M 1 : FILL PIPE AND VENT LINE
SEE SK STD 1011-01 DETAIL D
M 2: ACCESS MANWAY
M 3: CLEAN SOLVENT PUMP AND
HLA SK STD 1011-01 DETAIL A
M 4: WASTE SOLVENT DRAIN LINE
SEE STD 1010-01 DETAIL C
M 5: ACCESS MANWAY SEE SK
STD 1010-01 DETAIL B
M 6: FILL PIPE AND VENT LINE
SEE SK STD 1011-01 DETAIL D

FIGURE IV-2

PROPRIETARY STATEMENT

THIS DRAWING IS THE EXCLUSIVE PROPERTY OF SAFETY-KLEEN SYSTEMS, INC. AND IS PROPRIETARY AND CONFIDENTIAL INFORMATION. THIS DRAWING AND THE INFORMATION CONTAINED THEREIN MUST NOT BE DUPLICATED, USED, DIVULGED, REPRODUCED, COPIED, DISCLOSED OR APPROPRIATED IN WHOLE OR IN PART FOR ANY PURPOSE OTHER THAT AS EXPRESSLY AUTHORIZED BY SAFETY-KLEEN SYSTEMS, INC. THIS DRAWING MUST BE RETURNED PROMPTLY UPON REQUEST.

NO.	DESCRIPTION	BY	CHK	APPR	DATE
D	CHANGE TANK CONTANTS TO PRODUCT	JEK	NT	NT	022219
C	ISSUED FOR PERMIT	JEK	NT	NT	041218
B	REVISE NOTES	JEK	NT	NT	061708
A	ADD FIGURE NUMBER/REVISE NOTES	JEK	NT	NT	052808
0	REVISE TO CURRENT CONDITIONS	JEK	MC	MC	021408

REVISIONS

TITLE
RETURN & FILL SHELTER
PIPING SCHEMATIC

SAFETY-KLEEN SYSTEMS, INC.
2600 N. CENT. EXPRESSWAY STE 400 RICHARDSON, TX. 75080
PHONE 800-669-5740

SCALE	BY	CHKD	P.E. APPR	OP. APPR	DATE
1/4"=1'	WEY	-	-	-	4-20-93

SERVICE CENTER BRANCH AT
LOS ANGELES, CA

STD-DWG-REV NO.
7116-4100-100-D

FIGURE IV-3

RETURN AND FILL STATION PLAN AND DETAILS

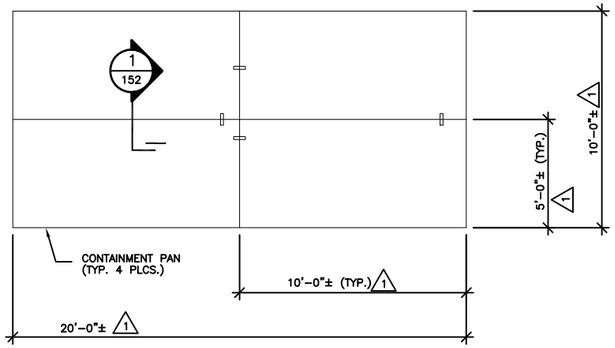

SECONDARY CONTAINMENT PAN LAYOUT
TYPICAL CONSTRUCTION
NO SCALE

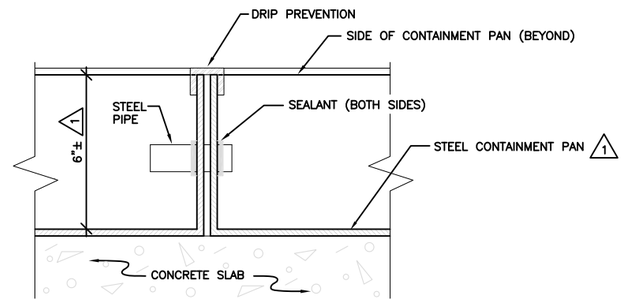

1 / 152 CONTAINMENT PAN SECTION
TYPICAL CONSTRUCTION
NO SCALE

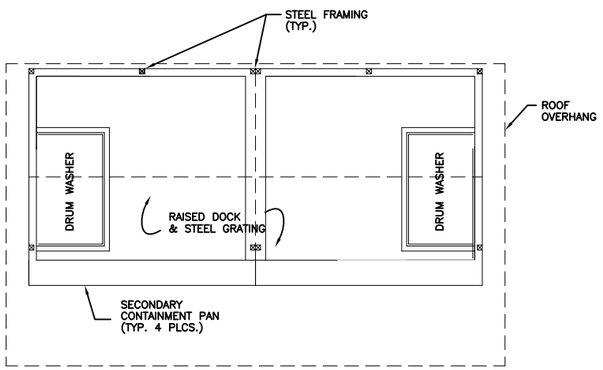

FLOOR PLAN
TYPICAL CONSTRUCTION
NO SCALE

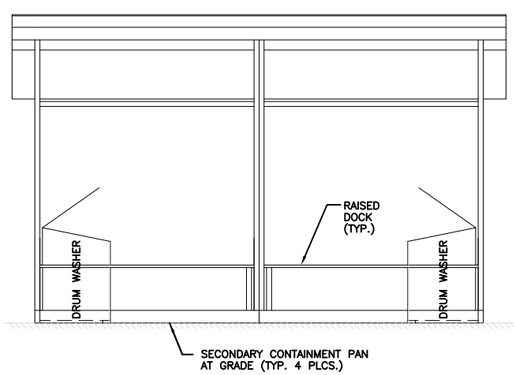

FRONT ELEVATION
TYPICAL CONSTRUCTION
NO SCALE

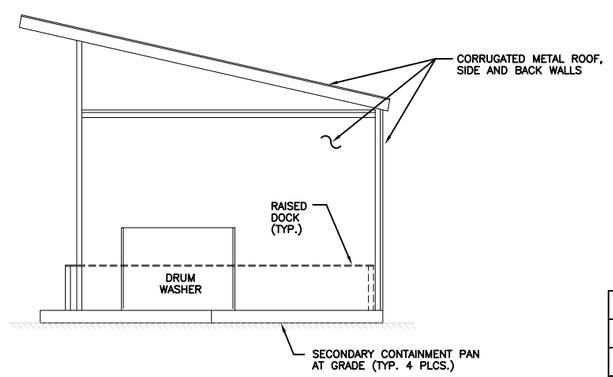

SIDE ELEVATION
TYPICAL CONSTRUCTION
NO SCALE

FIGURE IV-3

GENERAL NOTES

1. INDICATES AS BUILT MEASUREMENT OR FIELD VERIFICATION OF EXISTING CONDITION ON 8-11-93.

2. DETAILS INDICATED AS TYPICAL CONSTRUCTION IDENTIFY TYPICAL SAFETY-KLEEN CONSTRUCTION PRACTICES WHICH WERE NOT FIELD VERIFIED UNLESS SPECIFICALLY INDICATED.

PROPRIETARY STATEMENT

THIS DRAWING IS THE EXCLUSIVE PROPERTY OF SAFETY-KLEEN SYSTEMS, INC. AND IS PROPRIETARY AND CONFIDENTIAL INFORMATION. THIS DRAWING AND THE INFORMATION CONTAINED THEREIN MUST NOT BE DUPLICATED, USED, DIVULGED, REPRODUCED, COPIED, DISCLOSED OR APPROPRIATED IN WHOLE OR IN PART FOR ANY PURPOSE OTHER THAT AS EXPRESSLY AUTHORIZED BY SAFETY-KLEEN SYSTEMS, INC. THIS DRAWING MUST BE RETURNED PROMPTLY UPON REQUEST.

NO.	DESCRIPTION	BY	CHK	APPR	DATE
C	ISSUED FOR PERMIT	JEK	NT	NT	041218
0	ISSUED FOR REVIEW	JEK	MC	MC	110893

REVISIONS

TITLE
RETURN-AND-FILL STATION
PLAN AND DETAILS

SAFETY-KLEEN SYSTEMS, INC.
2600 N. CENT. EXPRESSWAY STE 400 RICHARDSON, TX. 75080
PHONE 800-669-5740

SCALE	BY	CHKD	APPROVED	OPERATIONS	DATE
AS SHOWN	CWM	GPM			8-11-93

SERVICE CENTER LOCATION	SC-DWG. NO.-REV. NO.	SHEET NO.
LOS ANGELES, CA.	7116-5600-600	

8-11-93 5:00 pm STD-1520 .DWG STANDARD

FIGURE IV-4A

R&F STATION AIR TAG INFORMATION

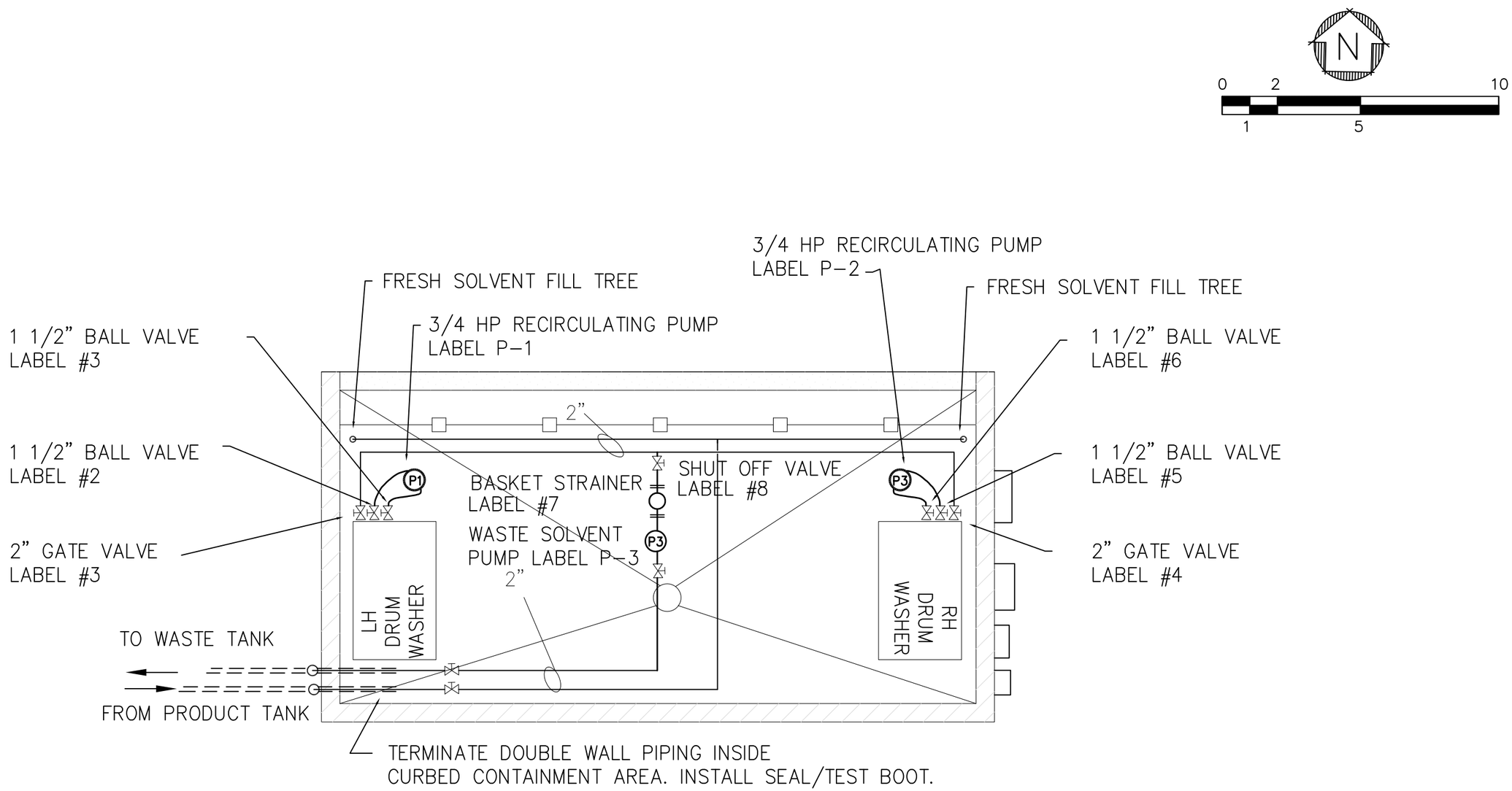

FIGURE IV-4A

PROPRIETARY STATEMENT

THIS DRAWING IS THE EXCLUSIVE PROPERTY OF SAFETY-KLEEN SYSTEMS, INC. AND IS PROPRIETARY AND CONFIDENTIAL INFORMATION. THIS DRAWING AND THE INFORMATION CONTAINED THEREIN MUST NOT BE DUPLICATED, USED, DIVULGED, REPRODUCED, COPIED, DISCLOSED OR APPROPRIATED IN WHOLE OR IN PART FOR ANY PURPOSE OTHER THAT AS EXPRESSLY AUTHORIZED BY SAFETY-KLEEN SYSTEMS, INC. THIS DRAWING MUST BE RETURNED PROMPTLY UPON REQUEST.

NO.	DESCRIPTION	BY	CHK	APPR	DATE
2	ISSUED FOR PERMIT	JEK	NT	NT	11-20-93
1	REVISE PIPE LAYOUT TO AS-BUILT				11-20-93

REVISIONS

TITLE

RETURN & FILL SHELTER
AIR TAG INFORMATION

SAFETY-KLEEN SYSTEMS, INC.
2600 N. CENT. EXPRESSWAY STE 400 RICHARDSON, TX. 75080
PHONE 800-669-5740

SCALE	BY	CHKD	P.E. APPR	OP. APPR	DATE
1/2"=1'	WEY	-	-	-	4-20-93

SERVICE CENTER BRANCH AT
LOS ANGELES, CA

STD-DWG-REV NO.
7116-4100-300

FIGURE IV-4B

DRUM WASHER/DUMPSTER ISOMETRIC

DUMPSTER/BARREL WASHER ASSY – DETAIL 1

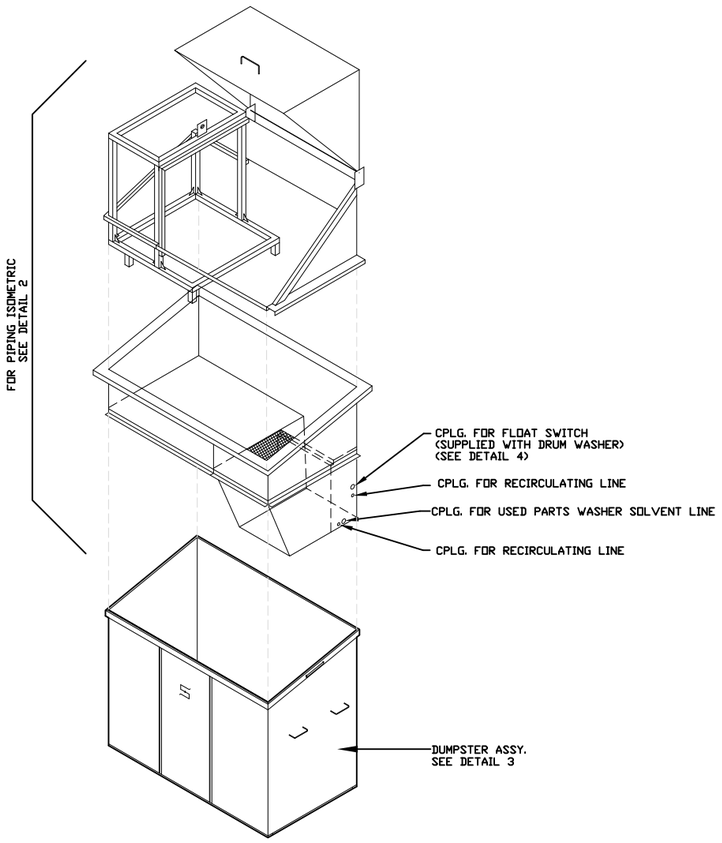

DUMPSTER ASSY. – DETAIL 3

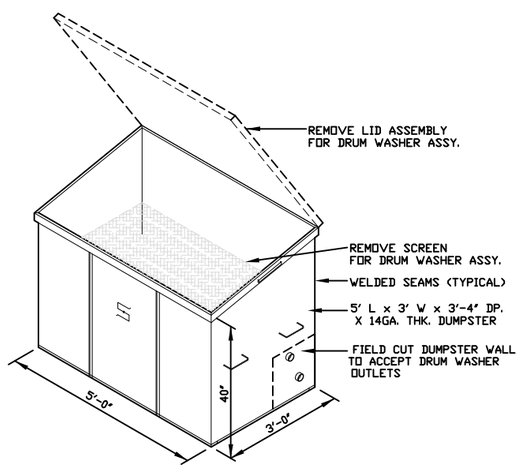

BARREL WASHER PIPING ISOMETRIC – DETAIL 2

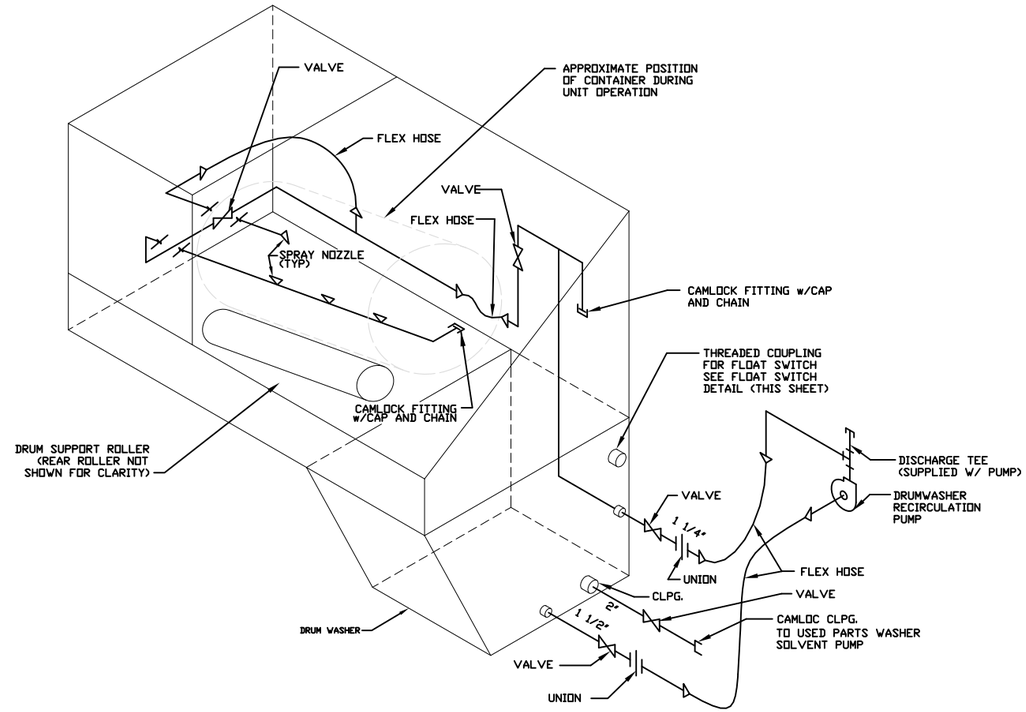

FLOAT SWITCH INSTALLATION – DETAIL 4

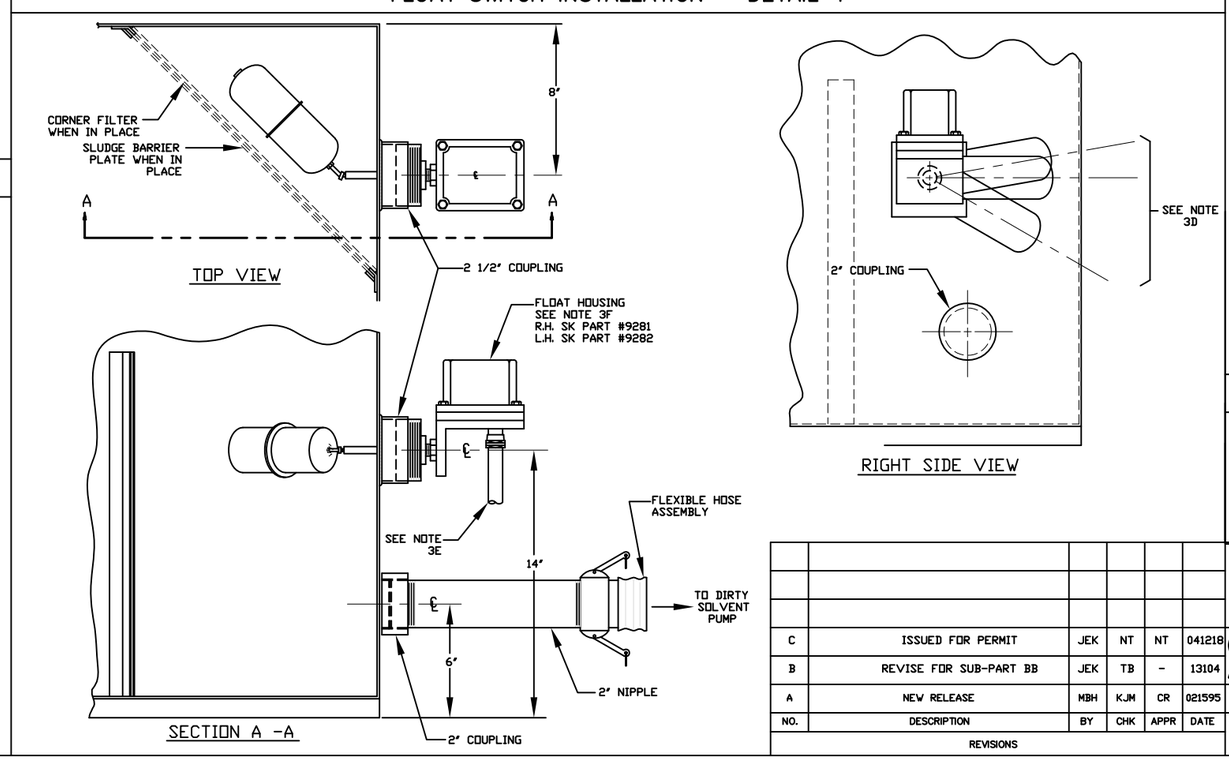

GENERAL NOTES

1.) THE BARREL WASHER UNIT AND DUMPSTER ARE SUPPLIED BY SAFETY-KLEEN CORP. AND COMBINED BY CONTRACTOR. RECIRCULATING PUMP, AND VALVES FOR DRUM WASHER ARE SUPPLIED BY SAFETY-KLEEN CORP. AND INSTALLED WITH CONTRACTOR SUPPLIED PIPE UNIONS AND HOSES.

9. ALL ITEMS WITH SAFETY-KLEEN PART NO. REFERENCES WILL BE SUPPLIED TO CONTRACTOR.

3. FLOAT SWITCH INSTALLATION INSTRUCTIONS

A. TAKE FLOAT SWITCH AND WRAP CLOCKWISE WITH 2 TEFLON WINDS OF TAPE AND INSTALL INTO 2 1/2" COUPLING ON OUTSIDE OF DUMPSTER

B. TAKE FLOAT AND THREAD IT INTO THE FLOAT SWITCH FROM THE INSIDE SHAFT OF THE DUMPSTER AND TIGHTEN SECURELY.

C. RELEASE SHIPPING BRACKET BY REMOVING SCREW AND DISCARDING BRACKET.

D. FLOAT TRAVEL SETTING ADJUSTMENTS CAN BE ACCOMPLISHED BY LOOSENING ADJUSTMENT SCREWS. THE FLOAT TRAVEL ARC SHOULD BE SET AT 10° TRAVEL UP AND 30° TRAVEL DOWN. (SEE CALIBRATION ON DIAL). SEE RIGHT SIDE VIEW.

E. FLOAT SWITCH SHOULD BE WIRED UP ACCORDING TO MFGRS. SPECS AND IN COMPLIANCE WITH ANY LOCAL CODES. (USE RIGID CONDUIT THROUGHOUT).

F. FLOAT SWITCH TO BE INSTALLED ON SAME SIDE OF DUMPSTER AS DRAIN LINE. INSTALLATION SHOWN IS FOR RIGHT HAND SIDE OF DUMPSTER. FLOAT SWITCH IS SQUARE D CLASS 9037 HR - 3 (RIGHT HAND) OR HR - 4 (LEFT HAND).

G. RE-ADJUST FLOAT STOPS TO THOSE SHOWN ON RIGHT SIDE VIEW.

H. WHEN DUMPSTER DOES NOT HAVE A 2 1/2" COUPLING, ONE SHOULD BE ON (LIQUID TIGHT) TO DIMENSIONS SHOWN.

FIGURE IV-4B

PROPRIETARY STATEMENT

THIS DRAWING IS THE EXCLUSIVE PROPERTY OF SAFETY-KLEEN CORP. AND IS PROPRIETARY AND CONFIDENTIAL INFORMATION. THIS DRAWING AND THE INFORMATION CONTAINED THEREIN MUST NOT BE DUPLICATED, USED, DIVULGED, REPRODUCED, COPIED, DISCLOSED OR APPROPRIATED IN WHOLE OR IN PART FOR ANY PURPOSE OTHER THAN AS EXPRESSLY AUTHORIZED BY SAFETY-KLEEN CORP. THIS DRAWING MUST BE RETURNED PROMPTLY UPON REQUEST.

NO.	DESCRIPTION	BY	CHK	APPR	DATE
C	ISSUED FOR PERMIT	JEK	NT	NT	041218
B	REVISE FOR SUB-PART BB	JEK	TB	-	13104
A	NEW RELEASE	MBH	KJM	CR	021595

REVISIONS

TITLE

DRUM WASHER/DUMPSTER ISOMETRIC

SAFETY-KLEEN SYSTEMS, INC.
2600 N. CENT. EXPRESSWAY STE 400 RICHARDSON, TX. 75080
PHONE 800-669-5740

SCALE	BY	CHKD	APPROVED	OPERATIONS	DATE
NONE	MBH	KJM	CR		02-08-95

SERVICE CENTER LOCATION	SC-DWG NUMBER	REV. NO.
LOS ANGELES, CA.	7116-5600-299	C

051094

FIGURE IV-5

TANK SYSTEM PIPING AND INSTRUMENTATION (P&ID) DIAGRAM

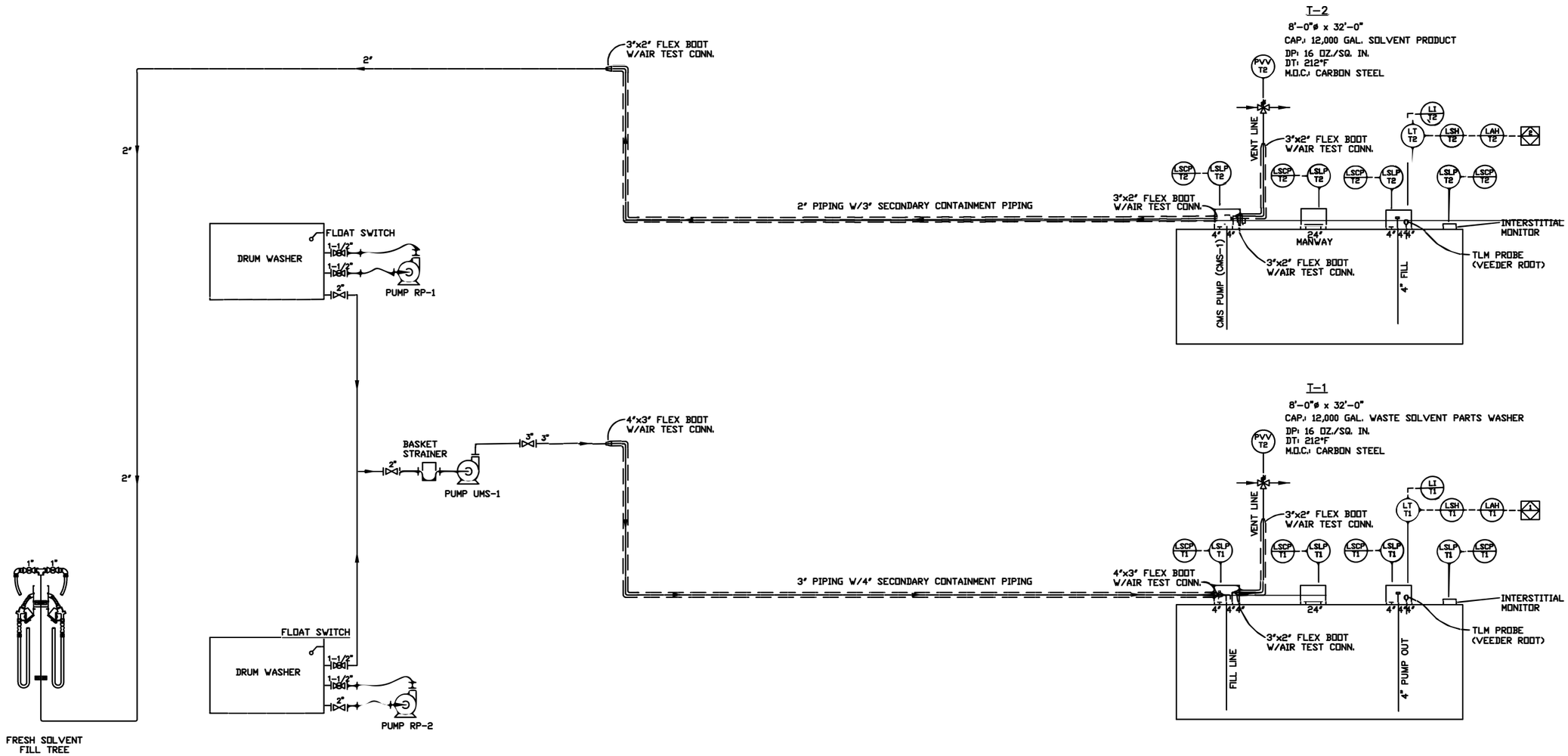

CMS-1
SP TRANSFER PUMP

RED JACKET BIG FLO	
30 USGPM	50 FT. TDH
2 HP	1750 RPM
0.79 S.G.	70°F

RP-1
RECIRCULATION PUMP

PRICE XT100	
60 USGPM	50 FT. TDH
1.5 HP	3450 RPM
0.82 S.G.	68°F

RP-2
RECIRCULATION PUMP

PRICE XT100	
60 USGPM	50 FT. TDH
1.5 HP	3450 RPM
0.82 S.G.	68°F

UMS-1
WSPW TRANSFER PUMP

MARLO 1-1/2HR49EC	
50 USGPM	50 FT. TDH
1.5 HP	3450 RPM
0.82 S.G.	68°F

FIGURE IV-5

LEGEND

LSLP	LEAK SENSOR, LIQUID PROBE
LSCP	LEAK SENSOR CONTROL PANEL
LT	LEVEL TRANSMITTER
LI	LEVEL INDICATOR
LSH	LEVEL SWITCH HIGH
LAH	LEVEL ALARM HIGH
PVV	PRESSURE VACUUM VENT
IM	INTERSTITIAL MONITOR
IMP	INTERSTITIAL MONITOR PANEL
SP	SOLVENT PRODUCT
WSPW	WASTE SOLVENT PARTS WASHER

2" FLANGED GATE VALVE
3" FLANGED BALL VALVE
1/2" BALL VALVE
PUMP
FLOW ARROW
FLEX PIPING
CONTAINMENT PIPING

NOTES

1. TYPICAL HAND SWITCH INITIATED PUMP OPERATION. PSL WILL STOP PUMP ON LOW PRESSURE. PUMP RESTARTED MANUALLY FROM ANY HAND SWITCH.

INTERLOCK NOTES:

1. PUMP UMS-1 SHUT DOWN ON TANK NO. T-1 HIGH LEVELS & PUMP PSL'S.
2. PUMP CMS-1 START/SHUT DOWN BY HAND OPERATED SWITCH AT PANEL.

NO.	DESCRIPTION	BY	CHK	APPR	DATE
A	ISSUED FOR PERMIT	JEK	NT	NT	022719

REVISIONS

PROPRIETARY STATEMENT

THIS DRAWING IS THE EXCLUSIVE PROPERTY OF SAFETY-KLEEN SYSTEMS, INC. AND IS PROPRIETARY AND CONFIDENTIAL INFORMATION. THIS DRAWING AND THE INFORMATION CONTAINED THEREIN MUST NOT BE DUPLICATED, USED, DIVULGED, REPRODUCED, COPIED, DISCLOSED OR APPROPRIATED IN WHOLE OR IN PART FOR ANY PURPOSE OTHER THAT AS EXPRESSLY AUTHORIZED BY SAFETY-KLEEN SYSTEMS, INC. THIS DRAWING MUST BE RETURNED PROMPTLY UPON REQUEST.

TITLE
TANK SYSTEM P & ID

SAFETY-KLEEN SYSTEMS, INC.
2800 N. CENT. EXPRESSWAY STE 400 RICHARDSON, TX. 75080
PHONE 800-669-5740

SCALE	BY	CHKD	P.E. APPR	DP. APPR	DATE
NONE	JEK	NT	NT	NT	2/27/19

BRANCH LOCATION: LAOS ANGELES, CA.
STD-DWG-REV NO.: 7116-4100-110

APPENDIX IV-1

CONTAINER STORAGE AREAS CERTIFICATION

(CALCULATIONS OF CONTAINMENT CAPACITY)

WINEFIELD & ASSOCIATES, INC.
ENVIRONMENTAL AND SAFETY CONSULTANTS

RCRA CONTAINER STORAGE AREA CERTIFICATION
SAFETY-KLEEN SYSTEMS, INC. – LOS ANGELES
2918 WORTHEN AVENUE
LOS ANGELES, CALIFORNIA

PREPARED FOR:
Safety-Kleen Systems, Inc.
2918 Worthen Avenue
Los Angeles, CA 90039

PREPARED BY:
Winefield & Associates, Inc.
110 Pine Avenue, Suite 900
Long Beach, California 90802

18 June 2008

W&A Project No. SKS-08-061

WINEFIELD & ASSOCIATES, INC.
ENVIRONMENTAL AND SAFETY CONSULTANTS

RCRA CONTAINER STORAGE AREA CERTIFICATION
SAFETY-KLEEN SYSTEMS, INC. – LOS ANGELES
2918 WORTHEN AVENUE
LOS ANGELES, CALIFORNIA

Prepared for:

Safety-Kleen Systems, Inc.
2918 Worthen Avenue
Los Angeles, CA 90039

Prepared by:

Winefield & Associates, Inc.
110 Pine Avenue, Suite 900
Long Beach, California
Phone: 562-495-4777 Fax: 562-495-5877

John W. Matthews, PE C 64105
Senior Consultant

18 June 2008

W&A Project No. SKS-08-061

TABLE OF CONTENTS

Section **Page**

1.0 INTRODUCTION 1
2.0 REGULATORY REVIEW 1
3.0 CERTIFICATION 4
4.0 REFERENCES 4

1.0 INTRODUCTION

Winefield & Associates, Inc. (W&A) visually inspected the container storage areas in Units A, B and C of the Safety-Kleen Systems, Inc. (S-K) Los Angeles Service Center on 15 May 2008. The purpose of the inspection was to determine if the areas met the requirements of 22 CCR 66264.175 and 40 CFR 264.175. As a result of these visual inspections, John W. Matthews, P.E., a California registered civil engineer has prepared this certified report. In addition to the visual inspection, drawings provided by Safety-Kleen of the subject areas were reviewed.

The California Code of Regulations are at least as stringent as the corresponding Code of Federal Regulations, and California is an authorized state concerning implementation of the Resource Conservation and Recovery Act (RCRA). The appropriate sections of the regulations for the design of container storage areas are discussed in the following Regulatory Review Section.

2.0 REGULATORY REVIEW

22 CCR 66264.175. Containment.

(a) Container transfer and storage areas shall have a containment system that is designed and operated in accordance with subsection (b) of this section.

Each requirement of 22 CCR 66264.175(b) is considered and discussed in the following sections. The certifying engineer has determined that the design meets the requirements and the operator is responsible for operating the area in accordance with their permit, the operations plan and all applicable regulations.

(b) A containment system shall be designed and operated as follows:
(1) a base shall underlie the containers which is free of cracks or gaps and is sufficiently impervious to contain leaks, spills, and accumulated precipitation until the collected material is detected and removed;

The engineer's visual inspection of the secondary containment areas in Units A and B on 15 May 2008 did not discover any significant cracks or gaps that had not been appropriately sealed. In Units A, B and C, the epoxy coating had been worn away in some of the high traffic areas, but the underlying concrete appeared to be intact. An expansion joint and some localized cracks were noted in Area C. Recommendations were made to the Safety-Kleen Systems, Inc. Engineering Department to make appropriate repairs to protect the containment structures and maintain their integrity.

(2) the base shall be sloped or the containment system shall be otherwise designed and operated to drain and remove liquids resulting from leaks, spills, or precipitation, unless the

containers are elevated or are otherwise protected from contact with accumulated liquids;

In units A, B, and C, all containers are stored on pallets. If the Unit C containment area were completely filled to the crest of the ramp, the bottom of the containers could be in contact with liquid, but this is a very unlikely condition and would only occur in a major spill event. This condition can quickly be remedied by responding to spills promptly and pumping collected liquids into appropriate containers.

(3) the containment system shall have sufficient capacity to contain precipitation from at least a 24-hour, 25-year storm plus 10 % of the aggregate volume of all containers or the volume of the largest container, whichever is greater. Containers that do not contain free liquids need not be considered in this determination;

The secondary containment in unit A is provided by two grated trenches at the North and South ends of the unit. The trench at the North end of Unit A extends the length of the exterior door facing Worthen Avenue. The trench at the South end of Unit A is shorter than the North trench. The volume of the North Trench is approximately 109 gallons and the volume of the South Trench is 64 gallons. The total capacity of the trenches is 173 gallons. Up to 1,730 gallons of containerized waste may be kept in unit A without exceeding the 10% volumetric capacity requirement of 22 CCR 66264.175.

The secondary containment in unit B is provided by a trench on the West portion of the perimeter. The trench has a width of 1.7 feet, a length of 12 feet and a depth of 2.5 feet with a total volume of 51 cubic feet or 381 gallons. Up to 3,810 gallons of containerized waste may be kept in unit B without exceeding the 10% volumetric capacity requirement of 22 CCR 66264.175.

The secondary containment in unit C is provided by a combination of a trench and a perimeter berm with a height of 4" and a ramp for forklift access to maintain the minimum perimeter height of 4". The trench has a width of 1.7 feet, a length of 11.7 feet and a depth of 2.5 feet with a total volume of 50 cubic feet or 372 gallons. The gross dimensions inside the curbs are 37'-8" by 36'-10". The minimum height of the ramp or perimeter curb is 4 inches or .33 feet. The gross containment volume is 462 cubic feet. A ramp and a rectangular pad near the exit door must be deducted from the gross volume. The rectangular pad has dimensions of 4' by 4'-4" by 4", for a total volume of 5.8 cubic feet. The ramp is 8 feet long by 10 feet wide, with a half-height of .17 feet. The volume occupied by the ramp is 12 cubic feet. Each pallet has an approximate volume of 2 cubic feet, and an approximate height of 5 inches. If 40 base pallets are stored in Unit C, the net containment volume is 364 cubic feet or 2,724 gallons. Combined with the trench volume, the total volume is 3,096 gallons. Up to 30,960 gallons of containerized waste may be kept in unit C without exceeding the 10% volumetric capacity requirement of 22 CCR 66264.175.

(4) run-on into the containment system shall be prevented unless the collection system has sufficient excess capacity in addition to that required in subsection (b)(3) of this section to contain any run-on which might enter the system; and

Run-on into the containment systems is prevented by the roof of the building, the surrounding walls and the slope to drain precipitation away from the building.

(5) spilled or leaked waste and accumulated precipitation shall be removed from the sump or collection area in as timely a manner as is necessary to prevent overflow of the collection system. If the collected material is a hazardous waste under chapter 11 of this division, it shall be managed as a hazardous waste in accordance with all applicable requirements of chapters 12 through 16 of this division. If the collected material is discharged through a point source to waters of the United States, it is subject to the requirements of section 402 of the Federal Clean Water Act, as amended (33 U.S.C. section 1342).

The secondary containment areas are inspected by Safety-Kleen personnel each operating day. All personnel have been trained to remove any accumulated liquids discovered in the containment areas within 24-hours of the discovery. Spill control equipment is available on site to respond to minor spills that are likely to occur. All spill residues are assumed to be hazardous wastes unless there is analytical documentation or sufficient generator knowledge to demonstrate otherwise. All spill residues are collected and sent for appropriate off-site recycling or disposal. No spill residues are discharged through a point source.

GENERAL NOTES

THIS DRAWING CONTAINS INFORMATION PROPRIETARY TO SAFETY-KLEEN SYSTEMS, INC. ANY REPRODUCTION, DISCLOSURE OR USE OF THIS DRAWING IS EXPRESSLY PROHIBITED EXCEPT BY SAFETY-KLEEN OR AS SAFETY-KLEEN MAY AGREE IN WRITING.

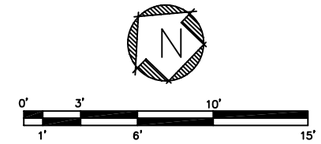

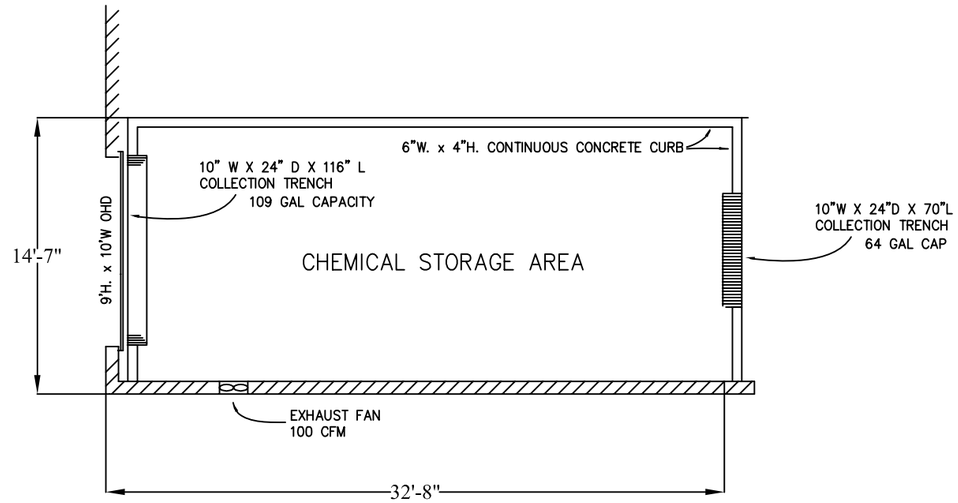

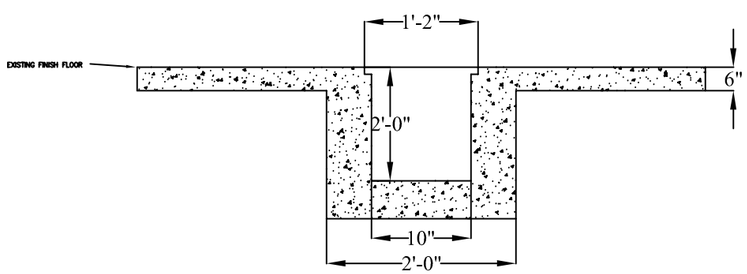

TRENCH DETAIL – NO SCALE

PLOT DATE: 6–19–08

NO.	DESCRIPTION	BY	CHK	APPR	DATE

REVISIONS

TITLE

UNIT A, PLAN VIEW
2918 WORTHAN AVE

SAFETY–KLEEN SYSTEMS, INC.
5400 Legacy Dr., Cl. II, Bldg.3, Plano, TX 75024 (972) 265-2000

SCALE	BY	CHKD	P.E. APPR	OP. APPR	DATE
1:8"=1'-0"	JWM	-	-	-	6–18–08

SERVICE CENTER BRANCH AT
LOS ANGELES, CA

STD-DWG-REV NO.
708802-8001-01

GENERAL NOTES

THIS DRAWING CONTAINS INFORMATION PROPRIETARY TO SAFETY-KLEEN SYSTEMS, INC. ANY REPRODUCTION, DISCLOSURE OR USE OF THIS DRAWING IS EXPRESSLY PROHIBITED EXCEPT BY SAFETY-KLEEN OR AS SAFETY-KLEEN MAY AGREE IN WRITING.

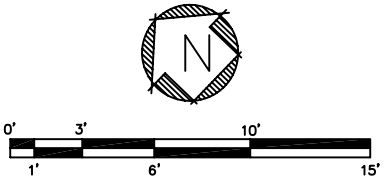

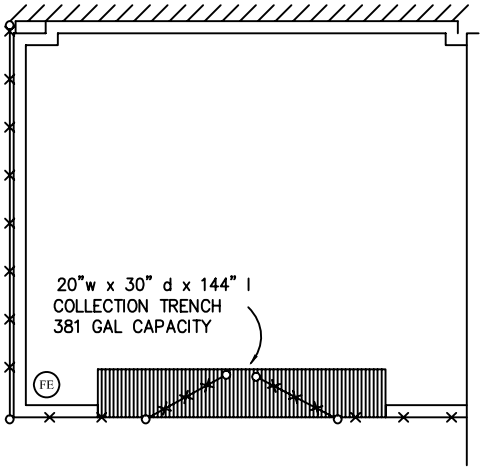

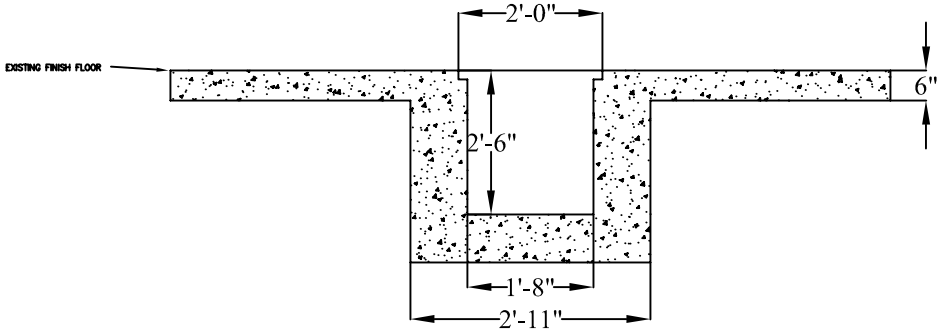

TRENCH DETAIL – NO SCALE

NO.	DESCRIPTION	BY	CHK	APPR	DATE

REVISIONS

TITLE

UNIT B, PLAN VIEW
2918 WORTHAN AVE

SAFETY–KLEEN SYSTEMS, INC.

5400 Legacy Dr., Cl. II, Bldg.3, Plano, TX 75024 (972) 265-2000

SCALE	BY	CHKD	P.E. APPR	OP. APPR	DATE
1/8"=1'-0"	JWM	-	-	-	6-18-08

SERVICE CENTER BRANCH AT: LOS ANGELES, CA

STD-DWG-REV NO.: 708802-8001-02

PLOT DATE: 6–19–08

GENERAL NOTES

THIS DRAWING CONTAINS INFORMATION PROPRIETARY TO SAFETY-KLEEN SYSTEMS, INC. ANY REPRODUCTION, DISCLOSURE OR USE OF THIS DRAWING IS EXPRESSLY PROHIBITED EXCEPT BY SAFETY-KLEEN OR AS SAFETY-KLEEN MAY AGREE IN WRITING.

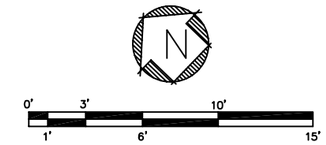

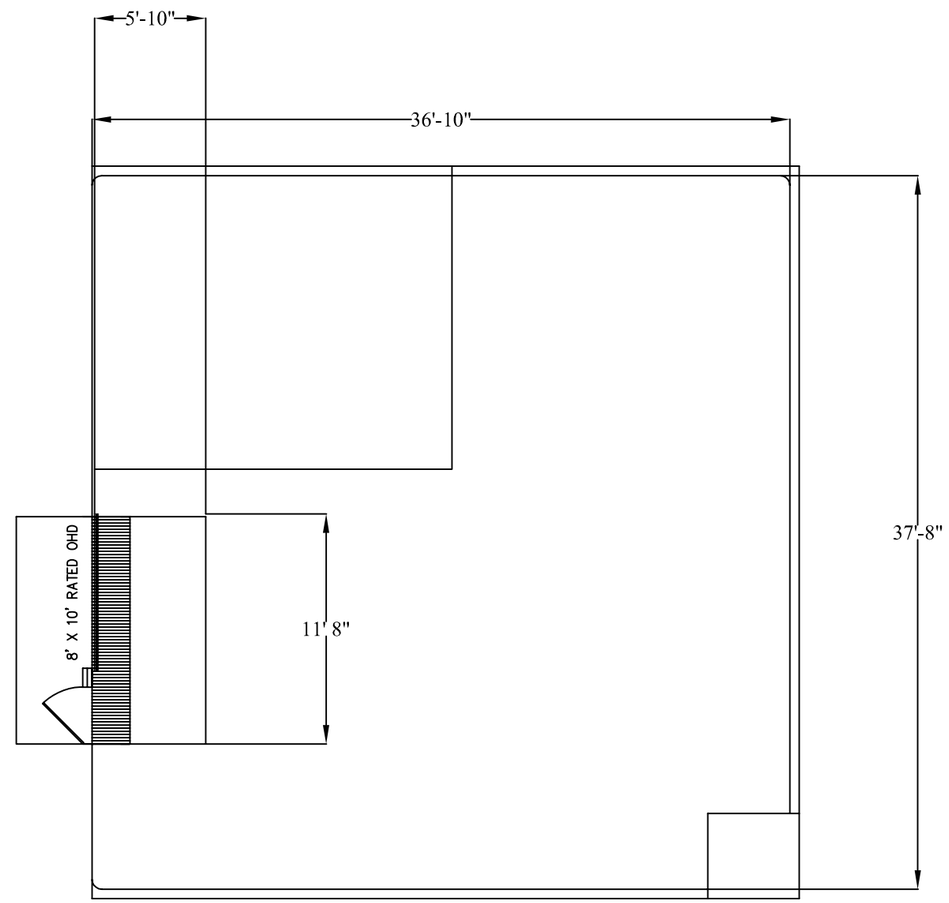

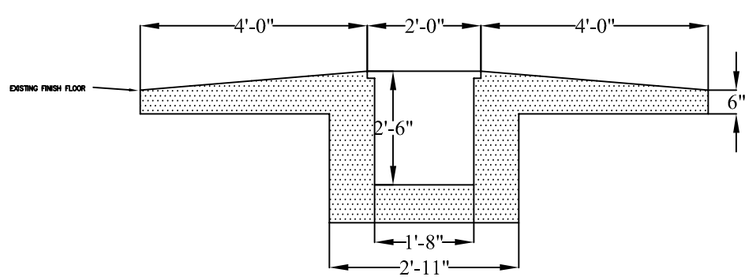

ELEVATED TRENCH DETAIL – NO SCALE

PLOT DATE: 6–19–08

NO.	DESCRIPTION	BY	CHK	APPR	DATE

REVISIONS

TITLE

UNIT C, PLAN VIEW
2918 WORTHAN AVE

SAFETY–KLEEN SYSTEMS, INC.
5400 Legacy Dr., Cl. II, Bldg.3, Plano, TX 75024 (972) 265-2000

SCALE	BY	CHKD	P.E. APPR	OP. APPR	DATE
1/8"=1'-0"	JWM	-	-	-	6-18-08

SERVICE CENTER BRANCH AT
LOS ANGELES, CA

STD-DWG-REV NO.
708802-8001-03

RCRA CONTAINER STORAGE AREA CERTIFICATION
SAFETY-KLEEN SYSTEMS, INC. – LOS ANGELES
2918 WORTHEN AVENUE
LOS ANGELES, CALIFORNIA

PREPARED FOR:
Safety-Kleen Systems, Inc.
2918 Worthen Avenue
Los Angeles, CA 90039

PREPARED BY:
A One-Stop Environmental Company
2201 E Willow St., D-229
Signal Hill, California 90755-4132

July 26, 2019

RCRA CONTAINER STORAGE AREA CERTIFICATION
SAFETY-KLEEN SYSTEMS, INC. – LOS ANGELES
2918 WORTHEN AVENUE
LOS ANGELES, CALIFORNIA

Prepared for:

Safety-Kleen Systems, Inc.
2918 Worthen Avenue
Los Angeles, CA 90039

Prepared by:

A One-Stop Environmental Company
2201 E Willow St., D-229
Signal Hill, California
Phone: 562-426-2036

John W. Matthews, PE C 64105
Principal Engineer

July 26, 2019

TABLE OF CONTENTS

Section **Page**

1.0 INTRODUCTION..... 1
2.0 REGULATORY REVIEW 1
3.0 CERTIFICATION 3
4.0 REFERENCES..... 4

1.0 INTRODUCTION

A One-Stop Environmental Company (One-Stop) visually inspected the container storage areas in Units A, B and C of the Safety-Kleen Systems, Inc. (S-K) Los Angeles Service Center on July 19, 2019. The purpose of the inspection was to determine if the areas met the requirements of 22 CCR 66264.175 and 40 CFR 264.175. As a result of these visual inspections, John W. Matthews, P.E., a California registered civil engineer has prepared this certified report. In addition to the visual inspection, drawings provided by Safety-Kleen of the subject areas were reviewed.

The California Code of Regulations are at least as stringent as the corresponding Code of Federal Regulations, and California is an authorized state concerning implementation of the Resource Conservation and Recovery Act (RCRA). The appropriate sections of the regulations for the design of container storage areas are discussed in the following Regulatory Review Section.

2.0 REGULATORY REVIEW

22 CCR 66264.175. Containment.

(a) Container transfer and storage areas shall have a containment system that is designed and operated in accordance with subsection (b) of this section.

Each requirement of 22 CCR 66264.175(b) is considered and discussed in the following sections. The certifying engineer has determined that the design meets the requirements and the operator is responsible for operating the area in accordance with their permit, the operations plan and all applicable regulations.

(b) A containment system shall be designed and operated as follows:
(1) a base shall underlie the containers which is free of cracks or gaps and is sufficiently impervious to contain leaks, spills, and accumulated precipitation until the collected material is detected and removed;

The engineer's visual inspection of the secondary containment areas in Units A and B on July 19, 2019 did not discover any significant cracks or gaps that had not been appropriately sealed. In Units A, B and C, the Chem Tec One Concrete Penetrant had been reapplied on July 7, 8, and 9 of 2019. The Penetrant increases the concrete density and significantly reduces the porosity and is suitably resistant to the materials stored at the facility to allow spills to be contained and collected without penetrating the concrete in a reasonable period of time.

(2) the base shall be sloped or the containment system shall be otherwise designed and operated to drain and remove liquids resulting from leaks, spills, or precipitation, unless the containers are elevated or are otherwise protected from contact with accumulated liquids;

In units A, B, and C, all containers are stored on pallets. If the Unit C containment area were completely filled to the crest of the ramp, the bottom of the containers could be in contact with liquid, but this is a very unlikely condition and would only occur in a major spill event. This condition can quickly be remedied by responding to spills promptly and pumping collected liquids into appropriate containers.

(3) the containment system shall have sufficient capacity to contain precipitation from at least a 24-hour, 25-year storm plus 10 % of the aggregate volume of all containers or the volume of the largest container, whichever is greater. Containers that do not contain free liquids need not be considered in this determination;

The secondary containment in unit A is provided by two grated trenches at the North and South ends of the unit. The trench at the North end of Unit A extends the length of the exterior door facing Worthen Avenue. The trench at the South end of Unit A is shorter, but wider than the North trench. The volume of the North Trench is approximately 109 gallons and the volume of the South Trench is 64 gallons. The total capacity of the trenches is 173 gallons. Up to 1,730 gallons of containerized waste may be kept in unit A without exceeding the 10% volumetric capacity requirement of 22 CCR 66264.175.

The secondary containment in unit B is provided by a trench on the West portion of the perimeter. The trench has a width of 1.7 feet, a length of 12 feet and a depth of 2.5 feet with a total volume of 51 cubic feet or 381 gallons. Up to 3,810 gallons of containerized waste may be kept in unit B without exceeding the 10% volumetric capacity requirement of 22 CCR 66264.175.

The secondary containment in unit C is provided by a combination of a trench and a perimeter berm with a height of 4'' and a ramp for forklift access to maintain the minimum perimeter height of 4''. The trench has a width of 1.7 feet, a length of 11.7 feet and a depth of 2.5 feet with a total volume of 50 cubic feet or 372 gallons. The gross dimensions inside the curbs are 37'-8'' by 36'-10''. The minimum height of the ramp or perimeter curb is 4 inches or .33 feet. The gross containment volume is 462 cubic feet. A ramp and a rectangular pad near the exit door must be deducted from the gross volume. The rectangular pad has dimensions of 4' by 4'-4'' by 4'', for a total volume of 5.8 cubic feet. The ramp is 8 feet long by 10 feet wide, with a half-height of .17 feet. The volume occupied by the ramp is 12 cubic feet. Each pallet has an approximate volume of 2 cubic feet, and an approximate height of 5 inches. If 40 base pallets are stored in Unit D, the net containment volume is 364 cubic feet or 2,724 gallons. Combined with the trench volume, the total volume is 3,096 gallons. Up to 30,960 gallons of containerized waste may be kept in unit C without exceeding the 10% volumetric capacity requirement of 22 CCR 66264.175.

(4) run-on into the containment system shall be prevented unless the collection system has sufficient excess capacity in addition to that required in subsection (b)(3) of this section to contain any run-on which might enter the system; and

Run-on into the containment systems is prevented by the roof of the building, the surrounding

walls and the slope to drain precipitation away from the building.

(5) spilled or leaked waste and accumulated precipitation shall be removed from the sump or collection area in as timely a manner as is necessary to prevent overflow of the collection system. If the collected material is a hazardous waste under chapter 11 of this division, it shall be managed as a hazardous waste in accordance with all applicable requirements of chapters 12 through 16 of this division. If the collected material is discharged through a point source to waters of the United States, it is subject to the requirements of section 402 of the Federal Clean Water Act, as amended (33 U.S.C. section 1342).

The secondary containment areas are inspected by Safety-Kleen personnel each operating day. All personnel have been trained to remove any accumulated liquids discovered in the containment areas within 24-hours of the discovery. Spill control equipment is available on site to respond to minor spills that are likely to occur. All spill residues are assumed to be hazardous wastes unless there is analytical documentation or sufficient generator knowledge to demonstrate otherwise. All spill residues are collected and sent for appropriate off-site recycling or disposal. No spill residues are discharged through a point source.

3.0 CERTIFICATION

I, John W. Matthews, P.E. have inspected the container storage facilities and reviewed drawings and calculations provided by Safety-Kleen Systems, Inc. for the container storage areas in Units A, B and C of the Safety-Kleen, Los Angeles California Facility. The secondary containment provided for the storage areas is sufficient to meet the requirements of the State of California and the Federal EPA requirements.

I certify under penalty of law that this secondary containment document was prepared by me. Based on my inquiry of the person or persons who manage the system, or those persons directly responsible for gathering the information, the information submitted is, to the best of my knowledge and belief, true, accurate, and complete. I am aware that there are significant penalties for submitting false information, including the possibility of fine and imprisonment for knowing violations.

John W. Matthews, P.E.
California Registered Professional Engineer

4.0 REFERENCES

Safety-Kleen Systems, Inc. Part B Renewal Application for the Los Angeles Service Center

22 CCR 66264.175

40 CFR 264.175

APPENDIX IV-2

WASTE UNDERGROUNG TANK CERTIFICATION

JULY 2018

Waste Solvent Tank

Tank and Secondary Containment Assessment Document CCR Section 66264.192

THIS DOCUMENT WAS PREPARED FOR:

Safety-Kleen, Inc.
2918 Worthen Ave.
Los Angeles, CA 90039

TANK SYSTEM/IDENTIFICATION:

Waste Solvent Tank

DATE OF INSPECTION(S)/ASSESSMENT:

11/2/2017

I certify under penalty of law that this document and all attachments were prepared under my direction or supervision in accordance with a system designed to assure that qualified personnel properly gather and evaluate the information submitted. Based on my inquiry of the person or persons who manage the system, or those persons directly responsible for gathering the information, the information submitted is, to be the best of my knowledge and belief, true, accurate, and complete. I am aware that there are significant penalties for submitting false information including the possibility of fine and imprisonment for knowing violations.

Dr. Joseph Matthew Plecnik
California PE No.: C26354
3562 Cerritos Ave.
Los Alamitos, CA 90720

Inspector's name: Joseph Michael Plecnik

REGISTERED PROFESSIONAL ENGINEER
JOSEPH M. PLECNIK
No. C26354
Exp. 3/31/2020
CIVIL
STATE OF CALIFORNIA

Date stamped/signed: 7/31/2018

TANK ASSESSMENT:

TANK NAME/MARKING	**Waste Solvent Tank**
DESCRIPTION	**Below ground, double wall, steel tank with FRP coating and flat ends.**
TANK AGE	**24 years**
MANUFACTURER	**Modern Welding Co., Inc.**
DATE OF FABRICATION	**September 1993**
SERIAL NUMBER OR OTHER	**UL# J360304**
DIAMETER	**8 feet**
LENGTH	**32 feet**
GROSS CAPACITY	**12,032 gallons**
SHAPE	**Cylindrical with flat ends**
ORIENTATION	**Horizontal**
LOCATION	**Below ground; north of main office building; east of virgin solvent tank**
MATERIAL OF CONSTRUCTION	**Primary Tank: Carbon steel** **Secondary Tank: Carbon Steel with FRP exterior coating**
EMPTY WEIGHT	**< 20,000 lbs.**
THICKNESS AND METHOD USED TO DETERMINE	**See Appendix B; Ultrasound**
LINING MATERIAL AND THICKNESS	**No liner**
DESIGN TEMPERATURE	**Ambient**
DESIGN PRESSURE	**Atmospheric**
SPILL PREVENTION / OVERFILL EQUIP.	**Yes; High level alarm**
LEAK DETECTION	**Yes; Electronic monitoring system in the annular space and sumps; tested yearly**
OTHER IDENTIFYING FEATURES	**N/A**
RECENT REPAIRS OR CHANGES	**None**
STORED MATERIAL AND CHARACTERISTICS	**S-K Premium Solvent with grease and oils from the recommended cleaning process of metal parts; Distillates (petroleum), hydrotreated light**

TANK DRAWING:
(Not to scale)

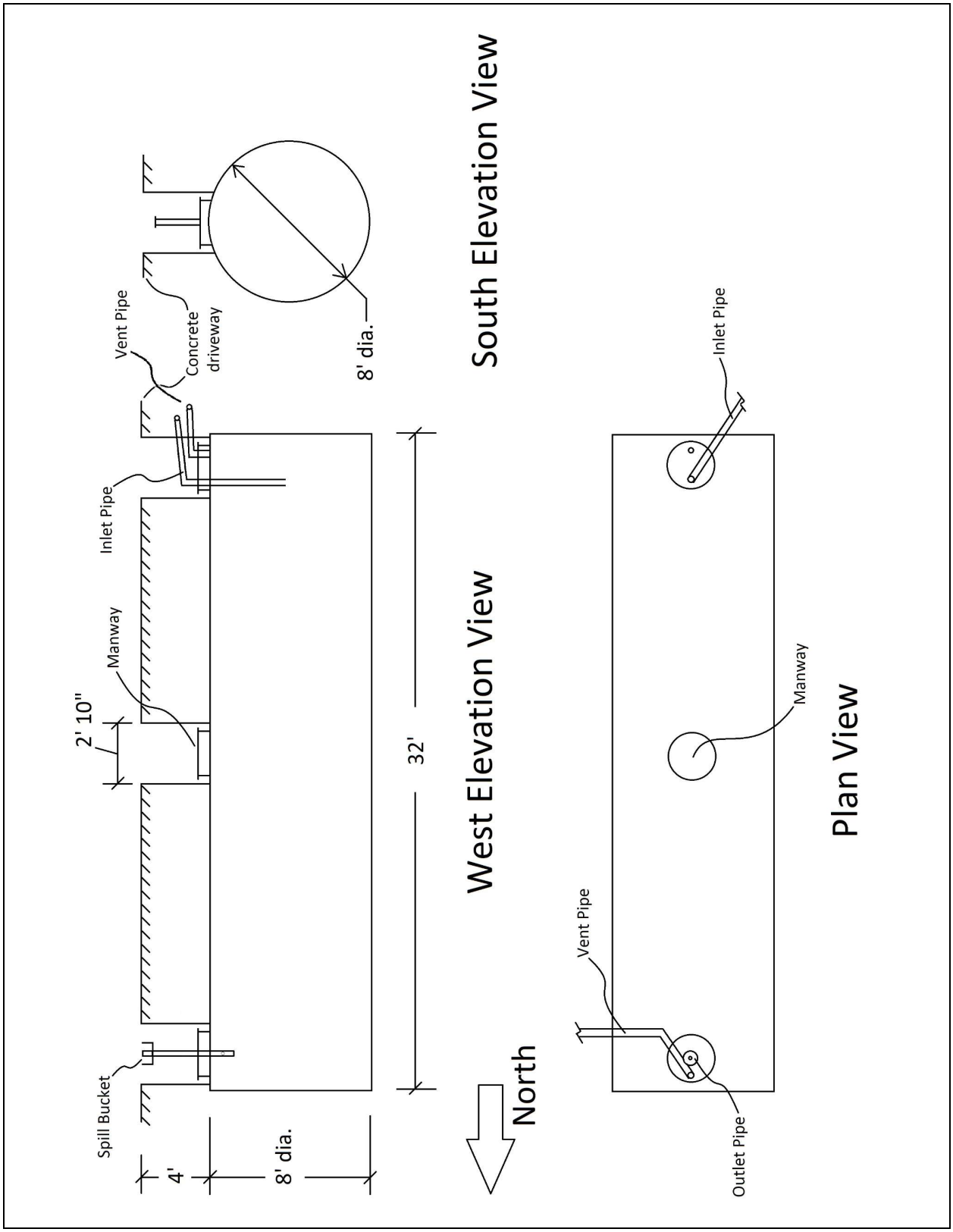

PIPING AND ANCILLARY EQUIPMENT:

PRIMARY PIPING

PIPING MATERIAL OF CONSTRUCTION	**Carbon Steel and FRP (fiberglass)**
PIPING DIAMETER	**2”**

SECONDARY PIPING

PIPING MATERIAL OF CONSTRUCTION	**Fiberglass (FRP)**
PIPING DIAMETER	**3-1/2”**

PUMPS

PUMP LOCATION(S)	**In drum wash area**
PUMP TYPE(S)/CAPACITIES	**Electric / < 5 gallons**

VISUAL INSPECTION:

DATE OF INSPECTION	**11/2/2017**
AMBIENT WEATHER CONDITIONS AT INSPECTION	**Cloudy, Dry; 68ºF**
TANK PARAMETERS AT INSPECTION	**Empty**
ACUTE VISUAL EVIDENCE OF LEAKS	**None**
INTERIOR SURFACE	**Good condition; Minor chemical deposits and rust; Majority is still smooth like when first fabricated; Fabrication chalk marks still visible**
MANWAYS	**Good condition; (1) 24" dia. Manway in mid-span of tank**
SUMP(S)	**Good condition; clean and free of any standing liquids**
NOZZLES, FLANGES, FITTINGS	**Good condition;**
PIPING	**Good condition; No apparent visible signs of leaks; See "Testing" section on page 6**
PUMPS	**Good condition; No apparent visible signs of leaks**
NORMAL VENTING	**Above ground, vertical vent pipes just south of tank**
EMERGENCY VENTING	**N/A**
ANNULAR SPACE	**Free of standing liquid / water**

TANK INTERNAL INSPECTION:

The tank's interior was visually inspected on 11/2/2017 by Joe Plecnik Jr. with the help of Tait Environmental Services. The field engineer did not find any dents, buckling or other significant defects in the primary shell of the tank. There was a small amount of corrosion in the form of oxidation on the interior surfaces of the shell. Chalk marks from the original fabrication process were still evident on the interior surface of the primary steel shell.

CONCRETE FOUNDATION:

The tank mentioned in this report is located below ground and covered with back-fill and a concrete foundation. Cars and trucks frequently pass over the area directly above the tank. The field engineer performed a brief visual inspection of the concrete directly above the tank to ensure no significant signs of damage were visible. Overall, the concrete directly above the tank did not contain visible signs of defects such as significant cracks or damage.

INTEGRITY TESTING:

Description: A series of pressure tests were performed by Tait Environmental Services, Inc. on 9/10/2014 to ensure the tightness of the tank and all ancillary equipment. These tests are conducted every 3 years using CA SB 989. The field engineer received a copy of the partial report from Tait and included it in this certification report (See Appendix C). Below is a summary of the equipment tested and the corresponding results. Additional tests are carried out to ensure that the electronic leak detection system is operating properly. The system, which is manufactured by Veeder-Root and maintained by Tait Environmental Services, is tested every year. Along with testing performed by Tait, the field engineer mentioned in this report tested each electronic probe in the three large sumps of the tank and the probe in the annular space to ensure proper working order. The tests were recorded on the Veeder-Root print out and signed by the field engineer. The results of those tests can be found below.

INTEGRITY TESTING RESULTS:

TANK AND EQUIPMENT TESTING

Item Tested	Date tested	Pressure (psi.)	Result
Inlet Pipe(s)	5/22/2017	5 psi.	**PASS**
Vent Pipe(s)	5/22/2017	5 psi.	**PASS**
Fill Sump	5/22/2017	Hydrostatic	**PASS**
Turbine Sump	5/22/2017	Hydrostatic	**PASS**
Manway Sump	7/3/2017	Hydrostatic	**PASS**
Annular Space of Tank	5/22/2017	10" hg	**PASS**

ELECTRONIC PROBE TESTING

Item Tested	Date tested	Pressure (psi.)	Result
Waste Tanker Sump	11/2/2017	N/A	**PASS**
Waste Manway Sump	11/2/2017	N/A	**PASS**
Waste Piping Return Sump	11/2/2017	N/A	**PASS**
Waste Annular Space	11/2/2017	N/A	**PASS**

INTEGRITY TESTING FINDINGS: Based on the above noted integrity tests and the results obtained from those tests, the tank and its ancillary equipment have sufficient integrity for its intended use.

Initials: JWB

MATERIAL STORAGE:

MATERIAL AND CHARACTERISTICS	**S-K Premium Solvent with grease and oils from the recommended cleaning process of metal parts; Distillates (petroleum), hydrotreated light**
SPECIFIC GRAVITY	**0.77 to 0.82**
OPERATING CAPACITY	**15,040 gallons**
SPECIFIC GRAVITY	**0.77 to 0.82**

CHEMICAL COMPATIBILITY FINDINGS:

There are many unknown chemicals found in the stored liquid of this tank due to the varying industries and companies contracting with Safety-Kleen. All of the unknown and known chemicals stored within this tank appear to have little affect on the steel shell of the tank. The certifying engineer and the field engineer have had extensive experience with similar tanks storing similar chemicals located at the other Safety-Kleen facilities throughout California and at other companies storing similar liquids. As with this tank all of the other similar underground waste solvent tanks at S-K facilities storing similar liquids show little signs of corrosion. Most of the interior surfaces of the S-K underground tanks have chalk markings left over from the original fabrication of the tanks. This is an indication that there is minor corrosion of the interior surfaces of the primary steel tank.

SECONDARY CONTAINMENT ASSESSMENT:

The tank mentioned in this report is a double-wall steel tank with a fiberglass (FRP) coating on the exterior of the outer shell. The annular space between the shells is electronically monitored to detect any liquid present in the annular space. The annular space is tested once a year by Tait Environmental Services. The field engineer who prepared this report visually inspected the bottom of the electronic probe at the bottom of the annular space to determine if any liquid was present in the annular space and concluded that the space was free of any such liquid. Overall, the secondary containment for the tank in question appears to be in good working order.

CORROSION {66264.192(b)(3)}:

There are many factors that affect the corrosion of the exteriors of tanks buried underground. In this case the exterior surfaces of the secondary steel shell of the tank are coated with fiberglass (FRP). Fiberglass coatings have a high corrosion resistance to many chemicals found in soils. Fiberglass and in particular fiberglass tanks have a long, successful history of being used to store flammable liquids underground. The certifying engineer has over 40 years of designing and inspecting fiberglass coated steel tanks and fiberglass tanks in general throughout the United States and in varying types of environments. It is the opinion of the certifying engineer that the exterior fiberglass coating of the tank in question has sufficient ability to protect the secondary steel shell from the effects of corrosion from the surrounding soil.

VEHICULAR TRAFFIC {66264.192(b)(4)}:

In the case of this tank the vehicular traffic affecting this tank is due to the tanker trucks loading or unloading liquids to and from the tank. The tank is protected from damage from the tanker trucks with the concrete foundation poured on top of the tank. The field engineer inspecting the tank system visually inspected the concrete foundation directly above the tank for cracks and other signs of damage caused by the tanker trucks driving over the tank. The field engineer did not observe any significant cracks or damage that would indicate damage to the concrete and consequently the tank.

ANCHORAGE {66264.192(b)(5)}:

(B) The location of this tank is not within a 100 yr. floodplain. Also, the highest level historically measured from a State or Los Angeles County groundwater well in this area was measured at 15.6 feet to the ground level back in 1993. The bottom of the tank is located at approximately 13 feet from the ground level; therefore, the chances of dislodgement or flotation of this particular tank is zero.

ANCHORAGE {66264.192(b)(5)} (cont'd.)

(C) The tank in this report is located in an area that has a frost heave penetration line of 0 inches to 5 inches. Since the tank and the ground water are located below this penetration level it is sufficient to say that there is little to no chance of frost heave occurring under or around the tank.

SEISMIC EVALUATION {66264.192(a)

The tank mentioned in this report is located in an area where liquefaction is possible depending on the type of soil that exists under the location of the tank. However, since the bottom of the tank is located above the highest, historical level of the ground water in the area there is little to no chance of liquefaction causing damage to the tank.

INSTALLATION REPORT:

A report titled "Underground Storage Tanks Installation Report" and dated December 14, 1993 was provided by Safety-Kleen. The report was prepared by Geraghty & Miller, Inc. Environmental Services formally based out of Irvine, CA.
The report was reviewed and stamped by Frank J. Johns, II, a registered Civil Engineer licensed in the state of California (#C-29313). In this report it states that the installation of the tank was performed per the tank manufacturer's requirements and API 1615 and was witnessed by John Sparks, an inspector with Los Angeles City Fire Department.

ESTIMATED REMAINING LIFE OF SERVICE:

The tank / vessel mentioned in this report has a remaining life expectancy of approximately **25 years** based on the observation of the interior surfaces, thickness testing and analysis, and the professional engineer's experience with similar tanks operating in similar environments. UL 58 minimum thickness of 0.240 inches for the heads is assumed. The life expectancy may increase or decrease if the operating environment and/or the stored chemicals change. This is just an estimation. TI&CS, its associates, and its affiliates are not responsible for the accuracy of the reaming life expectancy of this tank / vessel.

	Average Tank Thickness (in.)			
	Original Fabricated Nominal Thickness (1993)	This Assessment (Minimum Thickness) (11/2/2017)	Difference	Avg. Rate of Corrosion per year
Shell	0.25	0.236	0.014	< 0.001 in/yr
Ends	Unknown	0.265	-----	-----

RECOMMENDATIONS:

A) Modifications required for near short-term tank usage:
(Less than 6 months)

NONE

B) Modifications required for long-term tank usage:
(More than 12 months)

NONE

RE-INSPECTION DATE:

On or before **November 2, 2020**, unless Federal, State, or Local agencies require an earlier inspection date.

Appendix A:

Field Thickness Data

THICKNESS DRAWINGS

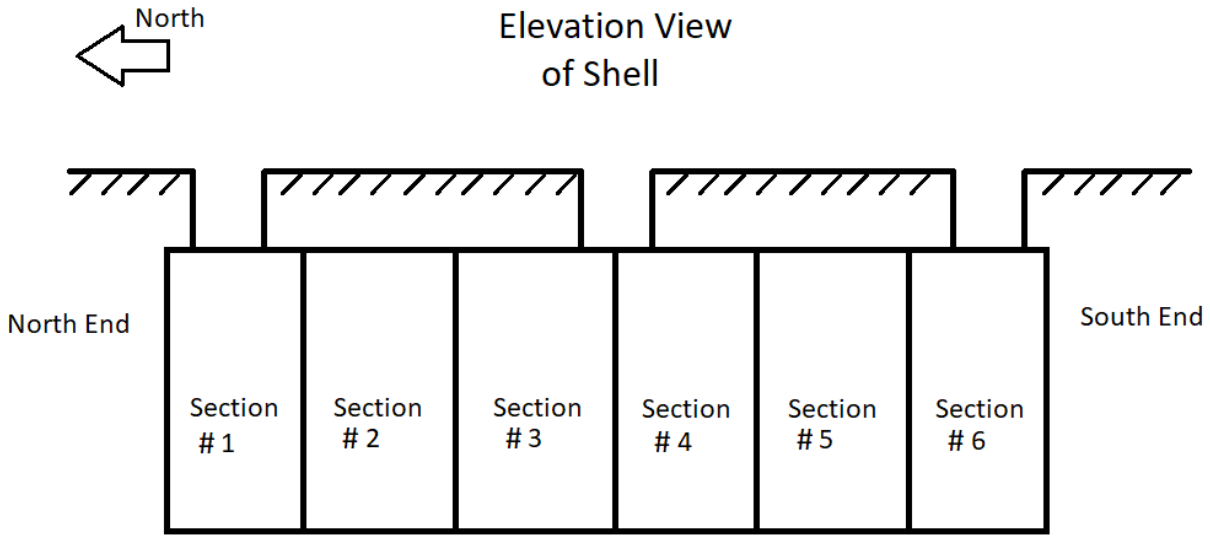

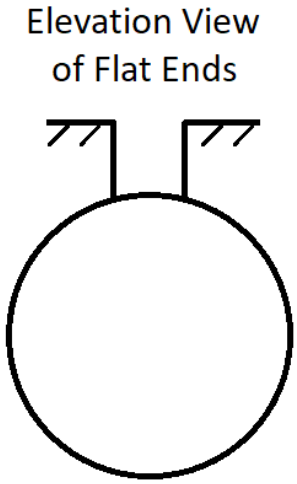

THICKNESS DRAWINGS

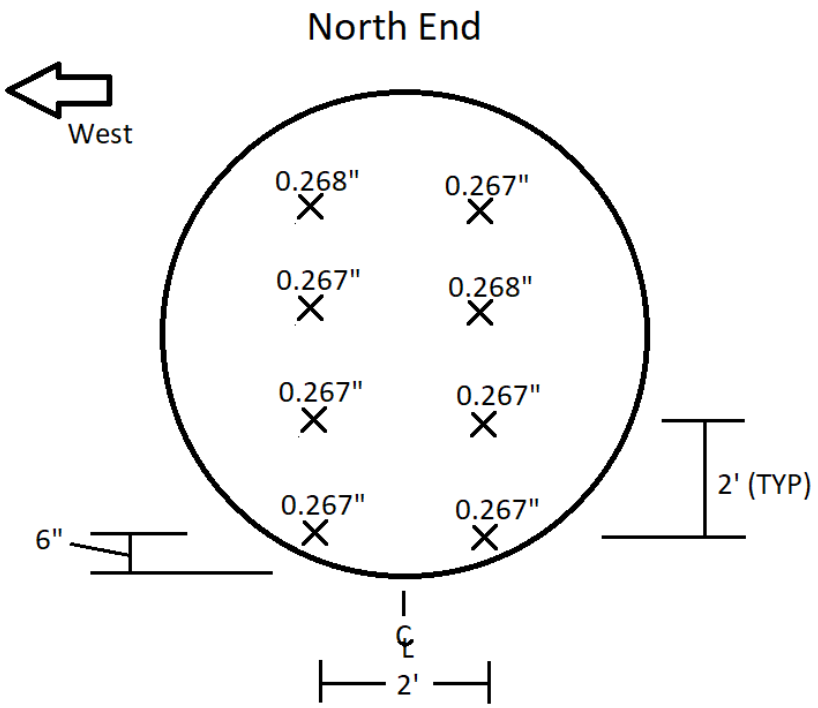

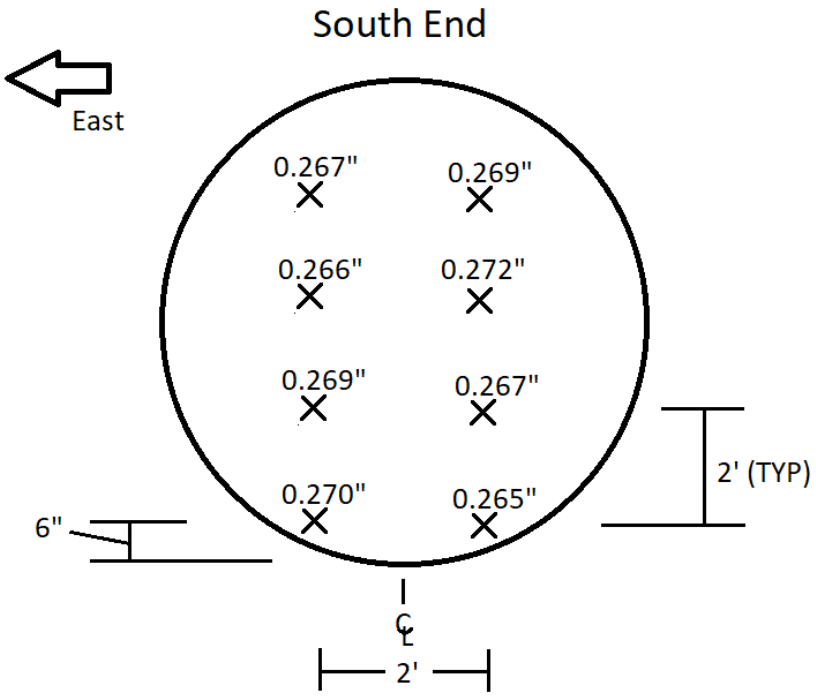

THICKNESS DRAWINGS

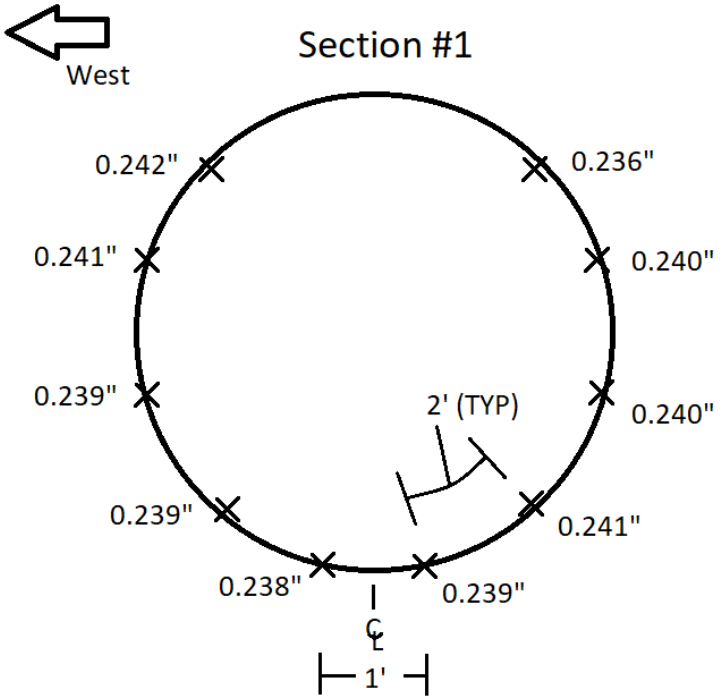

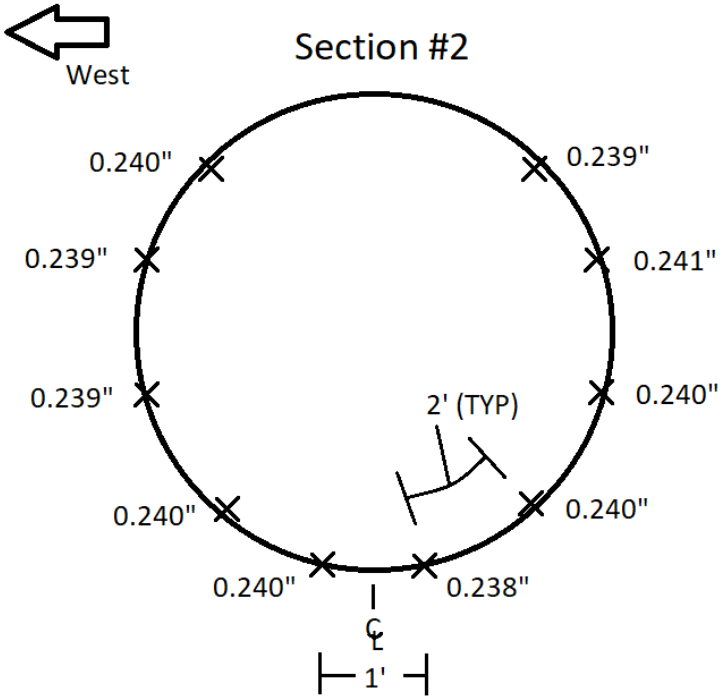

All readings taken at mid span of each section.

THICKNESS DRAWINGS

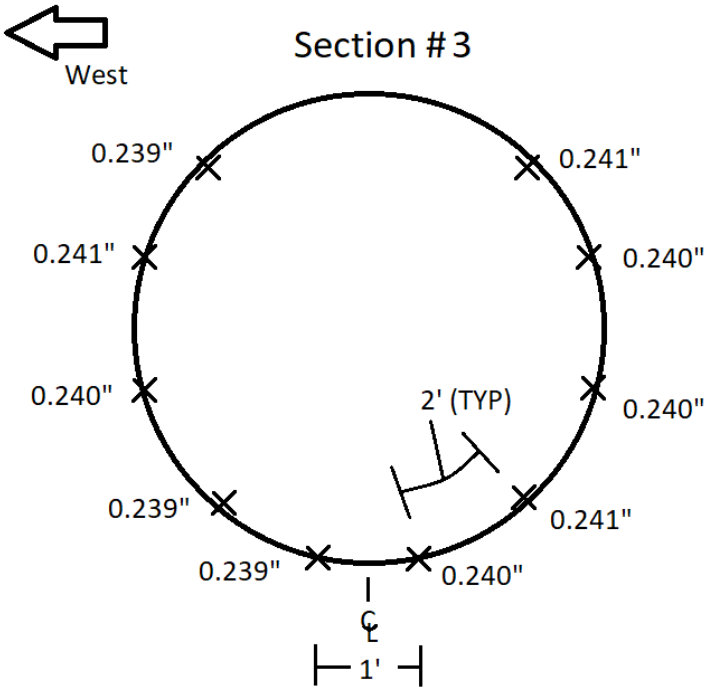

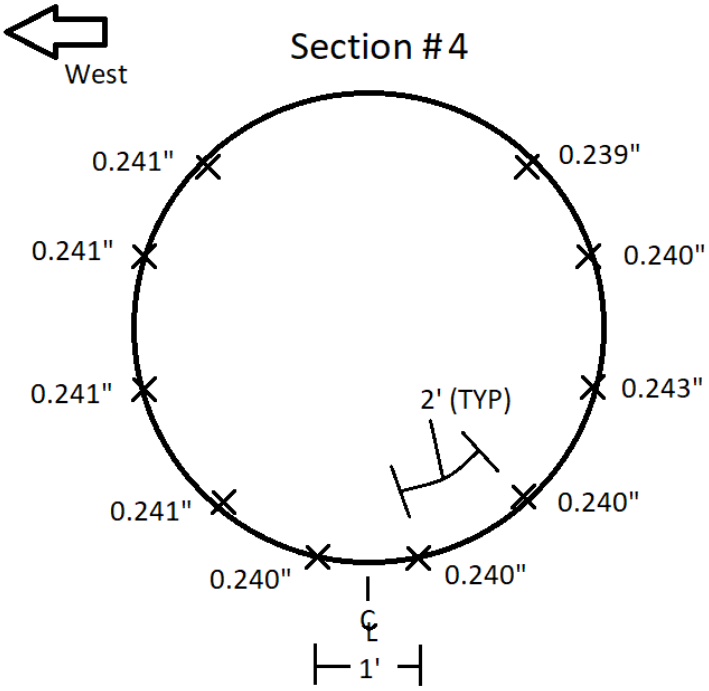

All readings taken at mid span of each section.

THICKNESS DRAWINGS

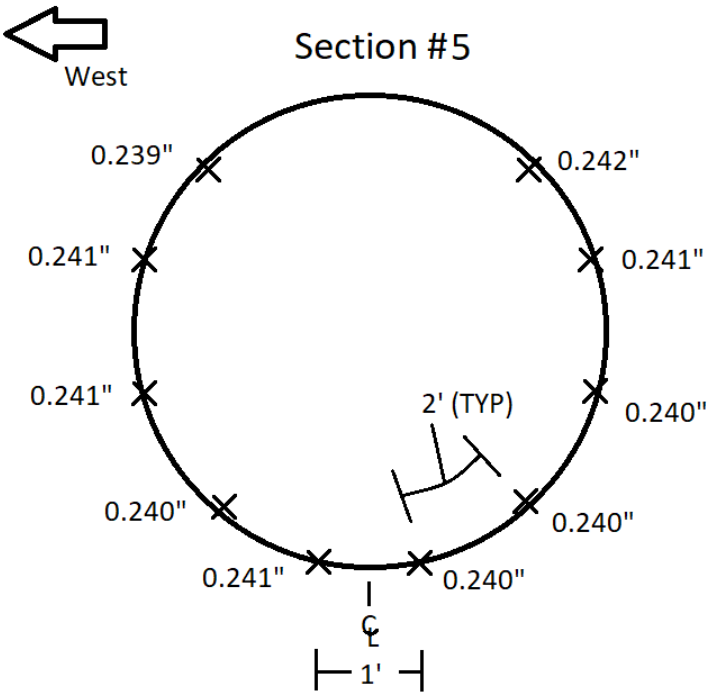

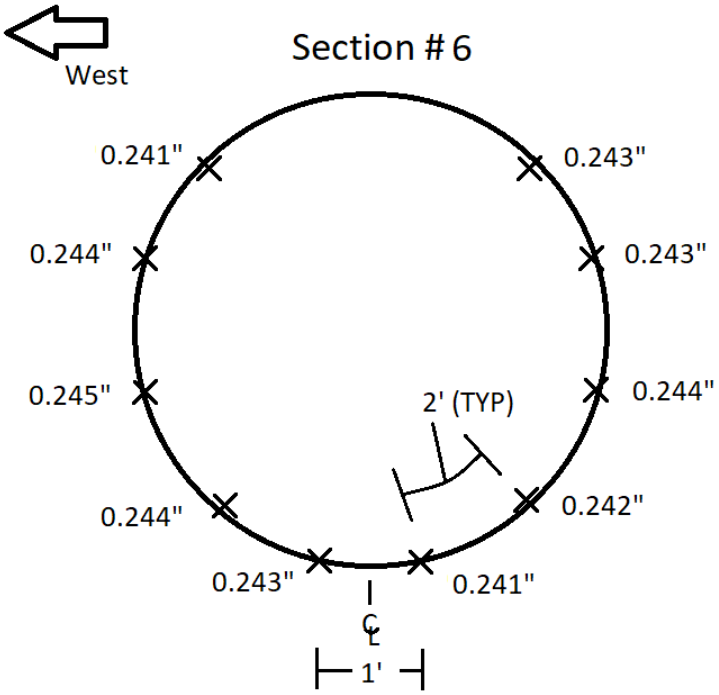

All readings taken at mid span of each section.

THICKNESS DATA
(All readings in inches)

Calibration			
Cordex three step block		Date: 11/2/2017	
Cordex Block	0.250	0.750	1.000
Actual Thickness	0.251	.750	1.005

	Test Location							
Reading	North End	Section 1	Section 2	Section 3	Section 4	Section 5	Section 6	South End
1	0.267	0.239	0.238	0.240	0.240	0.240	0.241	0.265
3	0.267	0.241	0.240	0.241	0.240	0.240	0.242	0.267
4	0.267	0.240	0.240	0.240	0.243	0.240	0.244	0.272
5	0.267	0.240	0.241	0.240	0.240	0.241	0.243	0.269
6	0.268	0.236	0.239	0.241	0.239	0.242	0.243	0.270
7	0.267	0.238	0.240	0.239	0.240	0.241	0.243	0.269
8	0.267	0.238	0.240	0.239	0.241	0.240	0.244	0.266
9	0.268	0.239	0.239	0.240	0.241	0.241	0.245	0.267
10		0.241	0.239	0.241	0.241	0.241	0.244	
11		0.242	0.240	0.239	0.241	0.239	0.241	

	Results							
Min.	0.267	0.236	0.238	0.239	0.239	0.239	0.241	0.265
Max.	0.268	0.242	0.241	0.241	0.243	0.242	0.245	0.272
Average	0.267	0.239	0.240	0.240	0.241	0.241	0.243	0.268
Std. Dev.	0.000	0.002	0.001	0.001	0.001	0.001	0.001	0.002

Appendix B:

Supporting Documents

SWRCB, January 2002

Secondary Containment Testing Report Form

This form is intended for use by contractors performing periodic testing of UST secondary containment systems. Use the appropriate pages of this form to report results for all components tested. The completed form, written test procedures, and printouts from tests (if applicable), should be provided to the facility owner/operator for submittal to the local regulatory agency.

1. FACILITY INFORMATION

Facility ID: 01

Client Name: Safety Kleen		Date of Testing: 5-22-2017	
Facility Address: 2918 Worthen Ave.	City: Los Angeles	State: CA	Zip Code: 90039
Facility Contact: Frank Riciglano	Phone: 805 237-1026	☐ Initial	☐ Repair Test
Date Local Agency Was Notified of Testing : 5-18-2017		☐ 6 Month	☐ Other
Name of Local Agency Inspector *(if present during testing)*: Timothy Pleasant		☒ Triennial	

2. TESTING CONTRACTOR INFORMATION

Company Name: TAIT Environmental Services		
Technician Conducting Test: Richard Harrebomee		
Credentials: ☒ CSLB Licensed Contractor	☐ SWRCB Licensed Tank Tester	☒ ICC UST Service Technician
License Type: A B ASB C-10 HAZ	License Number: 588098 5252138	

Manufacturer Training

Manufacturer	Component(s)	Date Training Expires
ICC	5252138	12-22-2017
Franklin Fueling Systems Incon STS	1636763701	4-16-2018

3. SUMMARY OF TEST RESULTS

Component	Pass	Fail	Not Tested	Repairs Made	Component	Pass	Fail	Not Tested	Repairs Made
T1 MPC Annular	☒	☐	☐	☐	T2 Waste Annular	☒	☐	☐	☐
T1 MPC Fill Sump	☒	☐	☐	☐	T2 Waste Fill Sump	☒	☐	☐	☐
T1 MPC Manway Sump	☒	☐	☐	☐	T2 Waste Manway Sump	☐	☒	☐	☐
T1 MPC Turbine Sump	☒	☐	☐	☐	T2 Waste Turbine Sump	☒	☐	☐	☐
T1 MPC Supply Line	☒	☐	☐	☐	T2 Waste Return Line	☒	☐	☐	☐
T1 MPC Vent Line	☒	☐	☐	☐	T2 waste Vent Line	☒	☐	☐	☐
	☐	☐	☐	☐		☐	☐	☐	☐
	☐	☐	☐	☐		☐	☐	☐	☐
	☐	☐	☐	☐		☐	☐	☐	☐
	☐	☐	☐	☐		☐	☐	☐	☐
	☐	☐	☐	☐		☐	☐	☐	☐
	☐	☐	☐	☐		☐	☐	☐	☐

If hydrostatic testing was performed, describe what was done with the water after completion of tests:
Test water placed in hazardous waste tank.

For any equipment capable of generating a print out of test results, you must attach a copy of the test report to this certification.

☒ System printout attached.

CERTIFICATION OF TECHNICIAN RESPONSIBLE FOR CONDUCTING THIS TESTING

To the best of my knowledge, the facts stated in this document are accurate and in full compliance with legal requirements

Technician's Signature: *Richard Harrebomee* Date: 5-22-2017

4. TANK ANNULAR TESTING

Test Method Developed By:	☐ Tank Manufacturer ☒ Industry Standard ☐ Professional Engineer ☐ Other *(Specify)*			
Test Method Used:	☐ Pressure ☒ Vacuum ☐ Hydrostatic ☐ Other *(Specify)*			
Test Equipment Used: 4" Dial Gauge			Equipment Resolution: .2	
	T1 MPC	T2 Waste		
Is Tank Exempt From Testing?[1]	☐Yes ☒No	☐Yes ☒No	☐ Yes ☐No	☐ Yes ☐ No
Tank Capacity:	11575	11575		
Tank Material:	Clad Steel	Clad Steel		
Tank Manufacturer:	Modern Welding	Modern Welding		
Product Stored:	MPC	Waste Water		
Wait time between applying pressure/vacuum/water and starting test:	1 Hour	1 Hour		
Test Start Time:	9:30 AM	1:00 PM		
Initial Reading (R_I):	_10" HG	_10" HG		
Test End Time:	10:30 AM	2:00 PM		
Final Reading (R_F):	_10" HG	_10" HG		
Test Duration:	60 Min	60 Min		
Change in Reading (R_F-R_I):	0	0		
Pass/Fail Threshold or Criteria:	0	0		
Test Result:	☒ **Pass** ☐**Fail**	☒ **Pass** ☐**Fail**	☐ **Pass** ☐ **Fail**	☐ **Pass** ☐**Fail**
Was sensor removed for testing?	☒Yes ☐No ☐NA	☒ Yes ☐No ☐NA	☐ Yes ☐No ☐NA	☐Yes ☐No ☐NA
Was sensor properly replaced and verified functional after testing?	☐Yes ☒No ☐NA	☐ Yes ☒No ☐NA	☐ Yes ☐No ☐NA	☐Yes ☐No ☐NA

Comments – *(include information on repairs made prior to testing, and recommended follow-up for failed tests)*

Sensor was reinstalled at lowest point but not verified functional.

[1] Secondary containment systems where the continuous monitoring automatically monitors both the primary and secondary containment, such as systems that are hydrostatically monitored or under constant vacuum, are exempt from periodic containment testing. {California Code of Regulations, Title 23, Section 2637(a)(6)}

5. SECONDARY PIPE TESTING

Test Method Developed By:	☐ Piping Manufacturer ☐ Other *(Specify)*	☒ Industry Standard	☐ Professional Engineer	
Test Method Used:	☒ Pressure ☐ Other *(Specify)*	☐ Vacuum	☐ Hydrostatic	
Test Equipment Used: 4" Dial Gauge			Equipment Resolution: .2	
	T1 MPC Supply	T1 MPC Vent	T2 Waste Return	T2 Waste Vent
Piping Material:	Fiberglass	Fiberglass	Fiberglass	Fiberglass
Piping Manufacturer:	A.O. Smith	A.O. Smith	A.O. Smith	A.O. Smith
Piping Diameter:	3"	3"	3"	3"
Length of Piping Run:	50'	20'	40'	20'
Product Stored:	MPC	MPC	Waste Water	Waste Water
Method and location of piping-run isolation:	Test Boot	Test Boot	Test Boot	Test Boot
Wait time between applying pressure/vacuum/water and starting test:	15 Min	15 Min	15 Min	15 Min
Test Start Time:	10:00 AM	11:00 AM	10:00 AM	10:00 AM
Initial Reading (R_I):	5 PSI	5 PSI	5 PSI	5 PSI
Test End Time:	11:00 AM	12:00 PM	11:00 AM	11:00 AM
Final Reading (R_F):	5 PSI	5 PSI	5 PSI	5 PSI
Test Duration:	1 Hour	1 Hour	1 Hour	1 Hour
Change in Reading (R_F-R_I):	0	0	0	0
Pass/Fail Threshold or Criteria:	0	0	0	0
Test Result:	☒ **Pass** ☐ **Fail**	☒ **Pass** ☐ **Fail**	☒ **Pass** ☐ **Fail**	☒ **Pass** ☐ **Fail**

Comments – *(include information on repairs made prior to testing, and recommended follow-up for failed tests)*

Replaced T1 vent line test boot.

6. PIPING SUMP TESTING

Test Method Developed By:	☐ Sump Manufacturer ☐ Other *(Specify)*	☒ Industry Standard	☐ Professional Engineer
Test Method Used:	☐ Pressure ☐ Other *(Specify)*	☐ Vacuum	☒ Hydrostatic
Test Equipment Used: Incon STS			Equipment Resolution: .0006

	T2 Waste		T1 Pipe Sump					
Sump Diameter:	48"		48"					
Sump Depth:	53"		53"					
Sump Material:	Fiberglass		Fiberglass					
Height from Tank Top to Top of Highest Piping Penetration:	25"		30"					
Height from Tank Top to Lowest Electrical Penetration:	15"		17"					
Condition of sump prior to testing:	Good		Good					
Portion of Sump Tested[1]	4" above highest pene		4" above highest pene					
Does turbine shut down when sump sensor detects liquid (both product and water)?*	☐Yes ☐No ☒NA		☐Yes ☐No ☒NA		☐Yes ☐No ☐NA		☐Yes ☐No ☐NA	
Turbine shutdown response time	NA		NA					
Is system programmed for fail-safe shutdown?*	☐Yes ☐No ☒NA		☐Yes ☐No ☒NA		☐Yes ☐No ☐NA		☐Yes ☐No ☐NA	
Was fail-safe verified to be operational?*	☐Yes ☐No ☒NA		☐Yes ☐No ☒NA		☐Yes ☐No ☐NA		☐Yes ☐No ☐NA	
Wait time between applying pressure/vacuum/water and starting test:	15 Min		15 Min					
Test Start Time:	12:15 PM	12:31 PM	12:51 PM	1:09 PM				
Initial Reading (R_I):	2.5261	2.5267	5.9687	5.9686				
Test End Time:	12:30 PM	12:46 PM	12:06 PM	1:24 PM				
Final Reading (R_F):	2.5268	2.5624	5.9685	5.9688				
Test Duration:	15 Min	15 Min	15 Min	15 Min				
Change in Reading (R_F-R_I):	.0007	.0003	.0002	.0002				
Pass/Fail Threshold or Criteria:	.002	.002	.002	.002				
Test Result:	☒ **Pass** ☐ **Fail**		☒ **Pass** ☐ **Fail**		☐**Pass** ☐**Fail**		☐ **Pass** ☐**Fail**	
Was sensor removed for testing?	☐Yes ☐No ☐NA		☐Yes ☐No ☐NA		☐Yes ☐No ☐NA		☐Yes ☐No ☐NA	
Was sensor properly replaced and verified functional after testing?	☐Yes ☐No ☐NA		☐Yes ☐No ☐NA		☐Yes ☐No ☐NA		☐Yes ☐No ☐NA	

Comments – *(include information on repairs made prior to testing, and recommended follow-up for failed tests)*

[1] If the entire depth of the sump is not tested, specify how much was tested. If the answer to <u>any</u> of the questions indicated with an asterisk (*) is "NO" or "NA", the entire sump must be tested. (See SWRCB LG-160)

8. FILL RISER CONTAINMENT SUMP TESTING

Facility is Not Equipped With Fill Riser Containment Sumps ☐								
Fill Riser Containment Sumps are Present, but were Not Tested ☐								
Test Method Developed By:	☐ Sump Manufacturer ☐ Other *(Specify)*		☒ Industry Standard		☐ Professional Engineer			
Test Method Used:	☐ Pressure ☐ Other *(Specify)*		☐ Vacuum		☒ Hydrostatic			
Test Equipment Used: Incon STS					Equipment Resolution: .0006			
	T2 Waste Fill		T2 Manway		T1 MPC Fill		T1 Manway	
Sump Diameter:	42"		42"		42"		42"	
Sump Depth:	48"		48"		48"		48"	
Height from Tank Top to Top of Highest Piping Penetration:	23"		NA		20"		NA	
Height from Tank Top to Lowest Electrical Penetration:	22"		21"		24"		22"	
Condition of sump prior to testing:	Good		Good		Good		Good	
Portion of Sump Tested	4" above highest pene		4" above highest pene		4" above highest pene		4" above highest pene	
Sump Material:	Fiberglass		Fiberglass		Fiberglass		Fiberglass	
Wait time between applying pressure/vacuum/water and starting test:	15 Min		15 Min		15 Min		15 Min	
Test Start Time:	1:55 PM	2:28 PM	11:24 AM	11:43 AM	1:55 PM	2:28 PM	12:15 PM	12:31 PM
Initial Reading (R_I):	4.7749	4.7754	1.0163	0.9839	2.6773	2.6763	1.3185	1.3181
Test End Time:	2:10 PM	2:43 PM	11:39 AM	11:58 AM	2:10 PM	2:43 AM	12:30 PM	12:46 PM
Final Reading (R_F):	4.7753	4.7755	0.9956	0.9691	2.6768	2.6758	1.3182	1.3181
Test Duration:	15 Min	15 Min	15 Min	15 Min	15 Min	15 Min	15 Min	15 Min
Change in Reading (R_F-R_I):	.0004	.0001	.0207	.0148	.0005	.0005	.0003	0
Pass/Fail Threshold or Criteria:	.002	.002	.002	.002	.002	.002	.002	.002
Test Result:	☒ **Pass** ☐ **Fail**		☐ **Pass** ☒ **Fail**		☒ **Pass** ☐ **Fail**		☒ **Pass** ☐ **Fail**	
Is there a sensor in the sump?	☒ Yes ☐ No		☒ Yes ☐ No		☒ Yes ☐ No		☒ Yes ☐ No	
Does the sensor alarm when either product or water is detected?	☐ Yes ☐ No ☒ NA		☐ Yes ☐ No ☒ NA		☐ Yes ☐ No ☒ NA		☐ Yes ☐ No ☒ NA	
Was sensor removed for testing?	☒ Yes ☐ No ☐ NA		☒ Yes ☐ No ☐ NA		☒ Yes ☐ No ☐ NA		☒ Yes ☐ No ☐ NA	
Was sensor properly replaced and verified functional after testing?	☐ Yes ☒ No ☐ NA		☐ Yes ☒ No ☐ NA		☐ Yes ☒ No ☐ NA		☐ Yes ☒ No ☐ NA	

Comments – *(include information on repairs made prior to testing, and recommended follow-up for failed tests)*

T2 Manway sump found leaking at manway gasket.

SAFETY KLEEN
2913 WORTHEN ST
LOS ANGELES
CALIFORNIA
TAIT ENVIRONMENTAL

05/22/2017 12:30 PM

SUMP LEAK TEST REPORT

T1MANVA

TEST STARTED	12:15 PM
TEST STARTED	05/22/2017
BEGIN LEVEL	1.3185 IN
END TIME	12:30 PM
END DATE	05/22/2017
END LEVEL	1.3182 IN
LEAK THRESHOLD	0.002 IN
TEST RESULT	PASSED

T2TURB

TEST STARTED	12:15 PM
TEST STARTED	05/22/2017
BEGIN LEVEL	2.5261 IN
END TIME	12:30 PM
END DATE	05/22/2017
END LEVEL	2.5268 IN
LEAK THRESHOLD	0.002 IN
TEST RESULT	PASSED

T2MANWY

TEST STARTED	12:15 PM
TEST STARTED	05/22/2017
BEGIN LEVEL	VOLUME ERR
END TIME	12:16 PM
END DATE	05/22/2017
END LEVEL	0.0000 IN
LEAK THRESHOLD	0.004 IN
TEST RESULT	ERROR

SAFETY KLEEN
2913 WORTHEN ST
LOS ANGELES
CALIFORNIA
TAIT ENVIRONMENTAL

05/22/2017 12:46 PM

SUMP LEAK TEST REPORT

T1MANVA

TEST STARTED	12:31 PM
TEST STARTED	05/22/2017
BEGIN LEVEL	1.3181 IN
END TIME	12:46 PM
END DATE	05/22/2017
END LEVEL	1.3181 IN
LEAK THRESHOLD	0.002 IN
TEST RESULT	PASSED

T2TURB

TEST STARTED	12:31 PM
TEST STARTED	05/22/2017
BEGIN LEVEL	2.5267 IN
END TIME	12:46 PM
END DATE	05/22/2017
END LEVEL	2.5264 IN
LEAK THRESHOLD	0.002 IN
TEST RESULT	PASSED

T2MANWY

TEST STARTED	12:31 PM
TEST STARTED	05/22/2017
BEGIN LEVEL	VOLUME ERR
END TIME	12:31 PM
END DATE	05/22/2017
END LEVEL	VOLUME ERR
LEAK THRESHOLD	0.004 IN
TEST RESULT	ERROR

T2MANWY

TEST STARTED	11:24 AM
TEST STARTED	05/22/2017
BEGIN LEVEL	1.0163 IN
END TIME	11:39 AM
END DATE	05/22/2017
END LEVEL	0.9956 IN
LEAK THRESHOLD	0.002 IN
TEST RESULT	FAILED

T2MANWY

TEST STARTED	11:43 AM
TEST STARTED	05/22/2017
BEGIN LEVEL	0.9839 IN
END TIME	11:58 AM
END DATE	05/22/2017
END LEVEL	0.9691 IN
LEAK THRESHOLD	0.002 IN
TEST RESULT	FAILED

SAFETY KLEEN
2913 WORTHEN ST
LOS ANGELES
CALIFORNIA
TAIT ENVIRONMENTAL

05/22/2017 1:24 PM

SUMP LEAK TEST REPORT

T1TURB

TEST STARTED	1:09 PM
TEST STARTED	05/22/2017
BEGIN LEVEL	5.9686 IN
END TIME	1:24 PM
END DATE	05/22/2017
END LEVEL	5.9688 IN
LEAK THRESHOLD	0.002 IN
TEST RESULT	PASSED

SAFETY KLEEN
2913 WORTHEN ST
LOS ANGELES
CALIFORNIA
TAIT ENVIRONMENTAL

05/22/2017 1:09 PM

SUMP LEAK TEST REPORT

T1TURB

TEST STARTED	12:51 PM
TEST STARTED	05/22/2017
BEGIN LEVEL	5.9687 IN
END TIME	1:06 PM
END DATE	05/22/2017
END LEVEL	5.9685 IN
LEAK THRESHOLD	0.002 IN
TEST RESULT	PASSED

SAFETY KLEEN
2913 WORTHEN
LOS ANGELES
CALIFORNIA
TAIT ENVIRONMENTAL

05/22/2017 2:10 AM

SUMP LEAK TEST REPORT

T1FILL

TEST STARTED	1:55 AM
TEST STARTED	05/22/2017
BEGIN LEVEL	2.6773 IN
END TIME	2:10 AM
END DATE	05/22/2017
END LEVEL	2.6768 IN
LEAK THRESHOLD	0.002 IN
TEST RESULT	PASSED

T2FILL

TEST STARTED	1:55 AM
TEST STARTED	05/22/2017
BEGIN LEVEL	4.7749 IN
END TIME	2:10 AM
END DATE	05/22/2017
END LEVEL	4.7753 IN
LEAK THRESHOLD	0.002 IN
TEST RESULT	PASSED

SAFETY KLEEN
2913 WORTHEN
LOS ANGELES
CALIFORNIA
TAIT ENVIRONMENTAL

05/22/2017 2:43 AM

SUMP LEAK TEST REPORT

T1FILL

TEST STARTED	2:28 AM
TEST STARTED	05/22/2017
BEGIN LEVEL	2.6763 IN
END TIME	2:43 AM
END DATE	05/22/2017
END LEVEL	2.6758 IN
LEAK THRESHOLD	0.002 IN
TEST RESULT	PASSED

T2FILL

TEST STARTED	2:28 AM
TEST STARTED	05/22/2017
BEGIN LEVEL	4.7754 IN
END TIME	2:43 AM
END DATE	05/22/2017
END LEVEL	4.7755 IN
LEAK THRESHOLD	0.002 IN
TEST RESULT	PASSED

TAIT
RISING TO THE CHALLENGE

2131 S. Dupont Drive, Anaheim, CA 92806

p:714/560;8222 www.tait.com

May 23, 2017

VIA Email: lafd.usttestnotify@lacity.org

Los Angeles City Fire Department
200 N. Main St., Room 1718
Los Angeles, CA 90012

Re: Secondary Containment Testing
SAFETY-KLEEN
2918 Worthen Avenue
Los Angeles, CA 90039

To Whom It May Concern:

Enclosed are the results for the following tests completed on May 22nd, 2017:

- Secondary Containment Testing

Please do not hesitate to call me if you have any questions.

Very Truly Yours,

Erin Langford

Erin Langford
Project Manager

SWRCB, January 2002

Secondary Containment Testing Report Form

This form is intended for use by contractors performing periodic testing of UST secondary containment systems. Use the appropriate pages of this form to report results for all components tested. The completed form, written test procedures, and printouts from tests (if applicable), should be provided to the facility owner/operator for submittal to the local regulatory agency.

1. FACILITY INFORMATION

Facility ID: 01

Client Name: Safety Kleen		Date of Testing: 07-03-2017	
Facility Address: 2918 Worthen Ave.	City: Los Angeles	State: CA	Zip Code: 90039
Facility Contact: Frank Riciglano	Phone: 805 237-1026	☐ Initial	☒ Repair Test
Date Local Agency Was Notified of Testing : June 16, 2017		☐ 6 Month	☐ Other
Name of Local Agency Inspector *(if present during testing)*: NA		☐ Triennial	

2. TESTING CONTRACTOR INFORMATION

Company Name: TAIT Environmental Services		
Technician Conducting Test: Jon Larsen		
Credentials: ☒ CSLB Licensed Contractor	☐ SWRCB Licensed Tank Tester	☒ ICC UST Service Technician
License Type: A B ASB C-10 HAZ	License Number: 588098 8144945	

Manufacturer Training

Manufacturer	Component(s)	Date Training Expires
ICC	8144945	06-01-2018
Franklin Fueling Systems Incon STS	5334273705	08-13-2017

3. SUMMARY OF TEST RESULTS

Component	Pass	Fail	Not Tested	Repairs Made	Component	Pass	Fail	Not Tested	Repairs Made
T2 Waste Manway Sump	☒	☐	☐	☐		☐	☐	☐	☐
	☐	☐	☐	☐		☐	☐	☐	☐
	☐	☐	☐	☐		☐	☐	☐	☐
	☐	☐	☐	☐		☐	☐	☐	☐
	☐	☐	☐	☐		☐	☐	☐	☐
	☐	☐	☐	☐		☐	☐	☐	☐
	☐	☐	☐	☐		☐	☐	☐	☐
	☐	☐	☐	☐		☐	☐	☐	☐
	☐	☐	☐	☐		☐	☐	☐	☐
	☐	☐	☐	☐		☐	☐	☐	☐
	☐	☐	☐	☐		☐	☐	☐	☐
	☐	☐	☐	☐		☐	☐	☐	☐

If hydrostatic testing was performed, describe what was done with the water after completion of tests:
Test water was left on site.

For any equipment capable of generating a print out of test results, you must attach a copy of the test report to this certification.

☒ System printout attached.

CERTIFICATION OF TECHNICIAN RESPONSIBLE FOR CONDUCTING THIS TESTING

To the best of my knowledge, the facts stated in this document are accurate and in full compliance with legal requirements

Technician's Signature: *Jon Larsen* Date: 07-03-2017

8. FILL RISER CONTAINMENT SUMP TESTING

Facility is Not Equipped With Fill Riser Containment Sumps ☐				
Fill Riser Containment Sumps are Present, but were Not Tested ☐				
Test Method Developed By:	☐ Sump Manufacturer ☒ Industry Standard ☐ Professional Engineer ☐ Other *(Specify)*			
Test Method Used:	☐ Pressure ☐ Vacuum ☒ Hydrostatic ☐ Other *(Specify)*			
Test Equipment Used: Incon STS			Equipment Resolution: .0006	

	T-2: Waste Manway							
Sump Diameter:	42:							
Sump Depth:	48"							
Height from Tank Top to Top of Highest Piping Penetration:	23"							
Height from Tank Top to Lowest Electrical Penetration:	22"							
Condition of sump prior to testing:	Good							
Portion of Sump Tested	4" above highest pene							
Sump Material:	Fiberglass							
Wait time between applying pressure/vacuum/water and starting test:	15 Min							
Test Start Time:	10:14 AM	10:29 AM						
Initial Reading (R_I):	5.7181	5.7178						
Test End Time:	10:29 AM	10:44 AM						
Final Reading (R_F):	5.7178	5.7162						
Test Duration:	15 Min	15 Min						
Change in Reading (R_F-R_I):	.0003	.0016						
Pass/Fail Threshold or Criteria:	.002	.002						
Test Result:	☒ **Pass** ☐ **Fail**		☐ **Pass** ☐ **Fail**		☐ **Pass** ☐ **Fail**		☐ **Pass** ☐ **Fail**	
Is there a sensor in the sump?	☒ Yes ☐ No		☐ Yes ☐ No		☐ Yes ☐ No		☐ Yes ☐ No	
Does the sensor alarm when either product or water is detected?	☐ Yes ☐ No ☒ NA		☐ Yes ☐ No ☐ NA		☐ Yes ☐ No ☐ NA		☐ Yes ☐ No ☐ NA	
Was sensor removed for testing?	☒ Yes ☐ No ☐ NA		☐ Yes ☐ No ☐ NA		☐ Yes ☐ No ☐ NA		☐ Yes ☐ No ☐ NA	
Was sensor properly replaced and verified functional after testing?	☐ Yes ☒ No ☐ NA		☐ Yes ☐ No ☐ NA		☐ Yes ☐ No ☐ NA		☐ Yes ☐ No ☐ NA	

Comments – *(include information on repairs made prior to testing, and recommended follow-up for failed tests)*

Replaced Waste Access Manway gasket prior to testing sump.

SAFETY KLEEN
2918 WORTHEN AVE
LOS ANGELES
CALIFORNIA
TAIT ENVIRONMENTAL

07/03/2017 9:04 AM

SUMP LEVEL REPORT

SUMP ACCESS 1.943 IN

SAFETY KLEEN
2918 WORTHEN AVE
LOS ANGELES
CALIFORNIA
TAIT ENVIRONMENTAL

07/03/2017 9:24 AM

SUMP LEAK TEST REPORT

ACCESS

TEST STARTED	9:09 AM
TEST STARTED	07/03/2017
BEGIN LEVEL	1.9429 IN
END TIME	9:24 AM
END DATE	07/03/2017
END LEVEL	1.9423 IN
LEAK THRESHOLD	0.002 IN
TEST RESULT	PASSED

SAFETY KLEEN
2918 WORTHEN AVE
LOS ANGELES
CALIFORNIA
TAIT ENVIRONMENTAL

07/03/2017 9:40 AM

SUMP LEAK TEST REPORT

ACCESS

TEST STARTED	9:25 AM
TEST STARTED	07/03/2017
BEGIN LEVEL	1.9423 IN
END TIME	9:40 AM
END DATE	07/03/2017
END LEVEL	1.9411 IN
LEAK THRESHOLD	0.002 IN
TEST RESULT	PASSED

SAFETY KLEEN
2918 WORTHEN AVE
LOS ANGELES
CALIFORNIA
TAIT ENVIRONMENTAL

07/03/2017 9:58 AM

ALARM REPORT

07/03/2017 9:58 AM
POWER DOWN

07/03/2017 9:58 AM
POWER UP

SAFETY KLEEN
2918 WORTHEN AVE
LOS ANGELES
CALIFORNIA
TAIT ENVIRONMENTAL

07/03/2017 9:59 AM

SUMP LEVEL REPORT

SUMP ACCESS 5.717 IN

SAFETY KLEEN
2918 WORTHEN AVE
LOS ANGELES
CALIFORNIA
TAIT ENVIRONMENTAL

07/03/2017 10:29 AM

SUMP LEAK TEST REPORT

ACCESS

TEST STARTED	10:14 AM
TEST STARTED	07/03/2017
BEGIN LEVEL	5.7181 IN
END TIME	10:29 AM
END DATE	07/03/2017
END LEVEL	5.7178 IN
LEAK THRESHOLD	0.002 IN
TEST RESULT	PASSED

SAFETY KLEEN
2918 WORTHEN AVE
LOS ANGELES
CALIFORNIA
TAIT ENVIRONMENTAL

07/03/2017 10:44 AM

SUMP LEAK TEST REPORT

ACCESS

TEST STARTED	10:29 AM
TEST STARTED	07/03/2017
BEGIN LEVEL	5.7178 IN
END TIME	10:44 AM
END DATE	07/03/2017
END LEVEL	5.7162 IN
LEAK THRESHOLD	0.002 IN
TEST RESULT	PASSED

TAIT
RISING TO THE CHALLENGE

2131 S. Dupont Drive, Anaheim, CA 92806

p:714.560.8222 www.tait.com

July 5, 2017

VIA Email: lafd.usttestnotify@lacity.org

Los Angeles City Fire Department
200 N. Main St., Room 1718
Los Angeles, CA 90012

Re: Secondary Containment Testing
SAFETY-KLEEN
2918 Worthen Avenue
Los Angeles, CA 90039

To Whom It May Concern:

Enclosed are the results for the following tests completed on July 3rd, 2017:

- Secondary Containment Testing

This was a re-test on the Manway Sump after the Manway Gasket was replaced on the waste tank.

Please do not hesitate to call me if you have any questions.

Very Truly Yours,

Erin Langford

Erin Langford
Project Manager

APPENDIX IV-3

ASSESSMENT OF THE INSTALLATION OF UNDERGROUND STORAGE TANKS

PREPARED BY:
GERAGHTY & MILLER, INC.
DECEMBER 14, 1993

UNDERGROUND STORAGE TANKS INSTALLATION REPORT

Safety-Kleen Branch Service Center
2918 Worthen Avenue
Los Angeles, California

December 14, 1993
CA0207.001

Prepared for:

Safety-Kleen Corporation
Sacramento, California

Prepared by:

Geraghty & Miller, Inc.
Environmental Services
One Technology Drive, Suite F-213
Irvine, California 92718
(714) 753-0444

UNDERGROUND STORAGE TANK INSTALLATION REPORT
SAFETY-KLEEN BRANCH SERVICE CENTER
LOS ANGELES, CALIFORNIA

December 14, 1993
CA0207.001

Geraghty & Miller, Inc. is submitting this report to Safety-Kleen Corporation for work performed at the Safety-Kleen Los Angeles Service Center (EPA ID # CAT000613935). The report was prepared in conformance with Geraghty & Miller's strict quality assurance/quality control procedures to ensure that the report meets the highest standards in terms of methods used and the information presented. If you have any questions or comments concerning this report, please contact one of the individuals listed below.

Respectfully submitted,

GERAGHTY & MILLER, INC.

Syed Asim Husain
Engineer

Sean Ragain
Senior Scientist

Craig Neslage
Associate/Office Manager

1.0 INTRODUCTION

Geraghty & Miller, Inc. has prepared this report to present the observations made during the installation of two, new, double-wall, 12,000-gallon underground storage tanks (USTs) at the Safety-Kleen Corporation Branch Service Center (EPA ID # CAT000613935) located at 2918 Worthen Avenue in Los Angeles, California. A site location map and site plan are included as Figures 1 and 2, respectively. One tank (product UST) is for the storage of mineral spirits (see MSDS Appendix A) and one (waste UST) is for the storage of waste mineral spirits.

This report has been prepared in accordance with Title 22 of the California Code of Regulations (22 CCR) and Title 40 of the Code of Federal Regulations (40 CFR) requirements for hazardous waste storage facilities. Specifically, the regulations apply to the installation of the waste tank. In accordance with 22 CCR 66264.192 and 66264.193 and 40 CFR 264.192 and 264.193, owners or operators of new tank systems must obtain a written assessment certified by an independent, qualified, registered professional engineer. This report provides the written assessment and certification.

A report describing the removal of the 12,000 gallon used solvent UST, 1,000-gallon mineral spirit sludge settling tank, and 12,000-gallon product UST previously in use at the site is being submitted under a separate cover entitled "Underground Storage Tank Removal Report, Safety-Kleen Branch Service Center, 2918 Worthen Avenue, Los Angeles, December 1993). The tank removal immediately preceded the tank installation described in this report. The new USTs were installed in the common excavation. The UST replacement activities were acknowledged by DTSC in correspondence dated July 1, 1993.

2.0 TANK INSTALLATION PROCEDURES

The removal of the old UST and installation and piping of new tanks was conducted by Petro Builders, Inc. (License # 241905, Class A, B, C61, D40 & HAZ) of Santa Fe Springs, California. The former USTs were removed by Petro Builders between August 3, 1993 and August 10, 1993. The new USTs and piping were installed between September 16, 1993 and October 10, 1993. The installation of the new USTs was conducted in accordance with the design prepared by Tera, Inc. of Houston, Texas, in June, 1992.

An installation-qualified engineer working under the direction of a professional engineer observed the tank installation that commenced on September 16, 1993. This section describes the installation work as summarized from daily field reports. Photographs of the tank installation work are included in Photographs section. Photocopies of replacement permit are included in Appendix B.

The excavation was prepared by installing non-woven filter fabric along the bottom and side walls of the tank pit. Two concrete hold-downs (deadmen) for each tank were spaced eight feet apart on either side of the excavation. The deadmen were then covered by placing approximately 2 feet of pea gravel in the bottom of the pit which was graded to the approximate slope at which the tanks were to be placed. The tanks were installed to slope toward the northeast end of the excavation where the interstitial space monitor was to be placed. Reinforced steel bar (re-bar) straps were cast into each deadman for attaching the tank anchors.

On September 16, 1993, two, 12,000-gallon, double-wall, steel, fiberglass-coated carbon steel tanks (Glasteel) manufactured by Modern Welding Company were delivered to the site. The waste tank (UL# J360304, ACT100# A13924) was delivered with a vacuum in the interstitial space measuring 11 inches of mercury. The product tank (UL# J360305, ACT100# A15675) was delivered with a vacuum in the interstitial space measuring 5.5 inches of mercury. Inspector John Sparks of the Los Angeles City Fire Department (LACFD) was present to observe the tank installation. The tanks were unloaded using a crane and suspended over

uncapped ground surface to test the integrity of the coating (Holiday Test). The test was accomplished by grounding the secondary containment tank, applying 35,000 volts to the fiberglass-coated clad steel secondary tank, and passing a T-shaped probe over the entire exterior surface of the tank. Any crack or opening in the coating would cause a spark when the conductive paddle was passed over that location. The coating integrity test in the fiberglass coating yielded no integrity lapse.

The tanks were installed in accordance with the manufacturer's requirements and American Petroleum Institute (API) Recommended Practice 1615 (API 1615) guidelines. The waste tank was placed in the excavation first followed by the product tank. After placement, a transit was used to check the elevation and slope of the tanks. A 1.5-inch drop from end to end toward the interstitial monitoring point was measured along the axis of the waste and product tanks.

Strips of rubber supplied by the tank manufacturer were placed between the fiberglass tank coating and the hold down straps to protect the tank finish. The hold down straps were attached to the deadmen to secure the tanks. Pea gravel was placed into the excavation to within 2 feet of the top of the tanks. On September 17, 1993 the shoring sheet piles that were installed prior to the removal of the old USTs were pulled using a vibratory pile driver. As the sheet piles were removed, small voids created along the edge of the excavation were filled with pea gravel and compacted.

Vent piping was installed from each tank to the vent risers attached to the side of the service center. Moisture knock-out pots were installed in each line. On September 24, 1993, the primary lines were installed and tested according to National Fire Protection Association (NFPA) Title 349. Inspector John E. Sparks of LACFD Underground Tank Enforcement Unit was on-site to observe the pressure test of the primary system. The waste tank was pressurized with air to 2.5 pounds per square inch (psi), the vent line to 60 psi, and the drain line to 80 psi. The product tank was pressurized to 2.5 psi, the vent line to 60 psi, and the product line to 80 psi. The pressure in each of the pressurized sections was maintained for 60 minutes with no

leakage. A soapy solution was applied with a sponge to all tank openings, riser appurtenances, and pipe joints connections and no leaks were found. After the test, the black iron riser pipe from the interstitial monitoring point was triple wrapped with sealing tape. The base of the wrap was then sealed to the tank with fiberglass and adhesive resin.

On September 27, 1993, the secondary containment piping installation was completed and inspected. Inspector John E.Sparks of LACFD was present to witness the secondary containment test. The secondary containment piping was pressurized to 5 psi for 30 minutes. Soapy water solution was applied with a sponge to all joints. No leaks were visible, and no drop in secondary containment pressure was observed during the test. The six containment sumps for the secondary containment piping had been filled the previous day with water to a level above any piping or electrical conduit penetrations. No leaks were found in these secondary containment sumps based on visual observation, and the work was approved by the LACFD. All lines to and from the tanks were verified to slope toward the secondary containment sumps with a level.

According to 22 CCR 66264.192 and 40 CFR 264.192, acceptable corrosion-protection measures for steel tanks include a fiberglass coating and a cathodic protection system with electrical isolation devices. A corrosion protection plan was completed by Farwest Corrosion Control Company of Bakersfield, California (Appendix C). Two, 17-pound, magnesium anodes were specified for each UST. The anodes were installed approximately three feet from the sidewalls of the excavation 10 feet below ground surface. On September 30, 1993, the cathodic protection lead was welded onto the exposed steel of the tank lifting lugs. The lugs were then sealed with a fiberglass cap. The tanks were electrically-isolated from the other parts of the system by installing isolation bushings on all product, waste, and vent piping. The isolation bushings on the vent lines were connected at the moisture knock-out pot flange and the isolation bushings on waste and product piping were installed inside the containment sumps.

After all below-grade piping and electrical components were installed and inspected, the excavation was backfilled with pea gravel to 18-inches of ground surface. A 1-foot base lift

was placed on the backfill and compacted. The surface was completed with a 6-inch concrete slab reinforced with a single mat of #4 re-bar at 12-inch centers in each direction.

A precision tank test was performed on October 7, 1993 by R.J. Meyers & Sons, Inc. (Register #92-1044) of North Hollywood, California. R.J. Meyers & Sons is authorized by the State Water Resources Control Board to certify the "tightness" of tanks in Los Angeles County. A pressure test was performed on the product line on October 7, 1993, and certified. Certified tank test results are attached as Appendix D. Both systems were certified as "tight" by representatives from the LACFD. On October 10, 1993 the LACFD approved both the product and waste UST for operation.

3.0 TANK INSTALLATION AND ASSESSMENT

The tank installation assessment has been prepared in compliance with CCR 66264.192 and 40 CFR 264.192. For brevity, for those items addressed in both the CCR and CFR, the text from the CCR has been used.

3.1 ASSESSMENT PER 22 CCR 66264.192(a)

(a) Tanks shall have sufficient shell strength and, for closed tanks, pressure controls (e.g., vents) to assure that they do not collapse or rupture. The Department will review the design for the tanks, including the foundation, structural support, seams and pressure controls and seismic considerations. The Department shall require that a minimum shell thickness be maintained at all times to ensure sufficient shell strength. Factors to be considered in establishing minimum thickness include the width, height and materials construction of the tank, and the specific gravity of the waste which will be placed in the tank. In reviewing the design of the tank and approving a minimum thickness, the Department shall rely upon appropriate industrial design standards and other available information.

The two new tanks were constructed by Modern Welding Company according to Safety-Kleen specifications that include the Underwriters Laboratories, Inc., Standard for Steel Underground Tanks for Flammable and Combustible Liquids, UL-58 (1987). Modern Welding Company states that the two underground storage tanks provided to Safety-Kleen for the Los Angeles Service Center were constructed to comply with UL-58, UL-142, EPA 280.20, NFPA Titles 30 and 31, and the Uniform Fire Code. The design specified a double-wall steel tank with a fiberglass outer coating. The inner tank was constructed of 0.25-inch hot-rolled carbon steel. The outer tank was constructed of 7-gauge carbon steel with a 0.125-inch (approximately 100 mils) fiberglass outer coating. The manufacturer's installation information and tank design documents are included in Appendix E.

To verify compliance with applicable CCR and CFR regulations, a certification of the Los Angeles service center tank systems design was completed by TERA, Inc. of Houston, Texas prior to the installation . The certification was prepared in the document entitled "Design Assessment Proposed Used Solvent Storage Tank System, Los Angeles, California Branch (June 1992). The tank systems were designed, constructed, and installed to meet the requirements of their use as outlined in the Design Assessment. The design provides shell strength, seams and thickness for the intended life and use of the tanks. The tank systems were designed and installed to contain mineral spirits which has a specific gravity ranging from 0.775 to 0.795. The tank operating pressure is atmospheric and operating temperatures ambient. As required, each tank is equipped with overfill protection, float valves and vents. A minimum thickness of 0.25 inches of hot-rolled carbon steel is anticipated to be maintained throughout the life of the tanks. As for the design, the vents provide pressure controls so that the tanks will not collapse or rupture under conditions of intended use. The installation provides foundation and structural support given the intended use and conditions of the site, as outlined in the Design Assessment. The recommendations of the Design Assessment regarding seismic considerations were strictly followed during installation.

3.2 Assessment Per 22 CCR 66264.192(b) and 40 CFR 264.192(a)

(b) Owners or operators of new tank systems or components shall obtain and submit to the Department, at time of submittal of Part B information, a written assessment, reviewed and certified by an independent, qualified professional engineer, registered in California, in accordance with section 66270.11(d), attesting that the tank system has sufficient structural integrity and is acceptable for the transferring, storing and treating of hazardous waste and that the tanks and containment system are suitably designed to achieve the requirements in this article. The assessment shall show that the foundation, structural support, seams, connections, and pressure controls (if applicable) are adequately designed and that the tank system has sufficient structural strength, compatibility with the waste(s) to be transferred, stored or treated, and corrosion protection to ensure that it will not collapse, rupture, or fail. This assessment, which

will be used by the Department to review and approve or disapprove the acceptability of the tank system design, shall also include, at a minimum, the following information:

(1) design standard(s) according to which tank(s) and/or the ancillary equipment are constructed

Design standards for the tanks are described in Section 3.1. In addition, ancillary equipment was installed according to Safety-Kleen specifications that include API 1615 and NFPA Titles 30 and 31 standards. Piping to and from the new tanks were constructed of carbon steel with flexible secondary containment piping. Swing joints were installed where underground piping connected with aboveground piping to the adjacent building. A submerged pumping system has been installed within a containment sump of the product tank in conformance with NFPA Title 30A. No pumping system is installed in the waste tank. Leak detection systems were installed in accordance with manufacturers' specifications and tested before finalization of the installation. The installation for the tanks and ancillary equipment are in accordance with the Design Assessment.

(2) hazardous characteristics of the waste(s) to be handled

Both tanks will contain mineral spirits. Mineral spirits is a liquid with a boiling point of greater than 304^{0}F and a flash point of 105^{0}F to 140^{0}F. Mineral spirits vapor of approximately 2mm Hg and a lower explosive limit of 0.8% in air. As stated in the Design Assessment, mineral spirits is reportedly only incompatible with strong oxidizers and reactive metals, and thus, there is no incompatibility of the tanks with their contents.

(3) for new tank systems or components in which the external shell of a metal tank or any external metal component of the tank system will be in contact with the soil or with water, a determination by a corrosion expert of:

(A) factors affecting the potential for corrosion...

(B) the type and degree of external corrosion protection that are needed to ensure the integrity of the tank system during the use of the tank system or component...

Groundwater at the site occurs at approximately 30 feet subgrade. Corrosion protection plan was generated by Farwest Corrosion Control Company (Appendix C). This plan called for a cathodic protection system that was implemented during the installation of the tank. The UST itself has been protected in addition with a fiberglass resin coating previously described. Factors affecting the potential for corrosion are included in Appendix C. The type and degree of external protection are also included in Appendix C.

(4) For underground tank system components that are likely to be adversely affected by vehicular traffic, a determination of design or operational measures that will protect the tank system against potential damage.

After all below grade piping and electrical components were installed and inspected, the excavation was backfilled to within 18 inches of the ground surface. A 1-foot lift of base rock was placed on the backfill and compacted. The surface was completed with a 6-inch concrete slab reinforced with #4 re-bar. The facility traffic flow was factored into the design specifications for tank depth and concrete pad. The USTs were installed so the tops of the tanks are 4-feet below ground surface. This reinforcement was designed to allow tank truck traffic above the USTs and fulfills the design requirements outlined in the Preconstruction Assessment.

(5) design considerations to ensure that

(A) tank foundations will maintain the load of a full tank.

(B) tank systems will be anchored to prevent flotation or dislodgement where the tank system is placed in a saturated zone, or is located within a seismic fault zone subject to the standards of section 66264.189a), and

(C) tank systems will withstand the effects of frost heave

A uniform tank foundation of granular compacted bedding and backfill was installed to maintain and support the load of a full tank as specified in the Design Assessment. Due to the climate in the Los Angeles, California area, frost is not considered problematic due to the 4-foot burial depth of the USTs in comparison to the low regional frost depth of 2-inches. Groundwater at the site occurs at a depth of 30 feet, substantially below the bottom of the tank excavation; therefore, floatation is not considered a concern. However, concrete deadmen were cast on-site and placed on each side of the excavation. Re-bar straps were embedded in each deadman for connection to the hold-down straps. These installation features exceed anchoring standards for tanks as outlined in API 1615. As outlined in Section 3.1, seismic activity is not a concern for this facility.

(6) those design requirements and factors listed in subsection (a) of this section

Design requirements are addressed under Section 3.1 and preceding subsections of 3.2 of this report.

3.3 Assessment Per 22 CCR 66264.192(c) and 40 CFR 264.192(b)

The owner or operator of a new tank system shall ensure that proper handling procedures are adhered to in order to prevent damage to the system during installation. Prior to covering, enclosing, or placing a new tank system or component in use, an independent, qualified installation inspector or an independent, qualified professional engineer, registered in California, either of whom is trained and experienced in the proper installation of tank system components, shall inspect the system for the presence of any of the following items

(1) weld breaks

(2) punctures

(3) scrapes of protective coatings

(4) cracks

(5) corrosion

(6) other structural damage or inadequate construction/installation.

All discrepancies shall be remedied before the tank system is covered, enclosed, or placed in use.

The waste UST was delivered with a vacuum in the interstitial space measuring 11 inches of mercury. The product UST was delivered with a vacuum in the interstitial space measuring 5.5 inches of mercury. Both internal tanks were at atmospheric pressure. It is assumed that any weld breaks or punctures would break this vacuum. Additionally, a visual inspection was performed on the tanks by the engineer per Geraghty and Miller. An inspector from the LACFD was also present for the tank replacement. No corrosion, scraps, cracks or punctures were found on the external shell. The tanks were unloaded using a crane and suspended over bare ground for the Holiday testing. The fiberglass coating integrity test was accomplished by grounding the secondary containment tank, applying 35,000 volts to the steel secondary tank, and passing a T-shaped probe over the entire exterior surface of the tank. Any crack or opening in the coating would cause a spark when the conductive paddle was passed over that location. The integrity test showed that no cracks or holes were present.

3.4 ASSESSMENT PER 22 CCR 66264.192(d) AND 40 CFR 264.192(c)

New tank systems or components that are placed underground and that are backfilled shall be provided with a backfill material that is non-corrosive, porous, homogeneous substance and that is installed so that the backfill is placed completely around the tank and compacted to ensure that the tank and piping are fully and uniformly supported.

As shown in the photographs included in Appendix A, the excavation was filled with pea gravel to within 18 inches of ground surface. The top layer was leveled and compacted before installation of the concrete pad to ensure that the tank and piping are fully and uniformly supported.

3.5 ASSESSMENT PER 22 CCR 66264.192(e) AND 40 CRT 264.192(d)

All new tanks and ancillary equipment must be tested for tightness prior to being covered, enclosed, or placed in use. If a tank system is found not to be tight, all repairs necessary to remedy the leak(s) in the system must be performed prior to the tank system being covered, enclosed, or placed into use.

Tanks were tested for tightness as described in the installation procedure in Section 2. Certified tank test results are included in Appendix D. The tank system was found to be free of leaks.

3.6 ASSESSMENT PER 22 CCR 66264.192(f) AND 40 CFR 264.192(e)

Ancillary equipment shall be supported and protected against physical damage and excessive stress due to settlement, vibration, expansion, or contraction.

Pumps for the system are located below ground in waterproof sumps. All electrical conduit and piping are installed in backfill beneath a six-inch concrete pad. The concrete pad was designed by TERA, Inc. of Houston to carry the vehicular loads expected at the site, and subsurface piping was installed below the compacted layer to further protect conduit and pipe from settlement and vibration. Leak detection equipment is located within the service center in a location protected from vehicular traffic. Subsurface vent and fill pipes surface adjacent to the service center within a small bermed area away from traffic on the site. Fill and vent pipes are connected at the surface with 45 degree connections to create swivel joints that are intended to allow expansion and contraction of subsurface piping without damage. The use of corrugated secondary containment pipe is intended to allow for expansion and contraction of the primary containment. Aboveground piping is supported no less than every 8 feet as specified in the Design Assessment.

3.7 ASSESSMENT PER 22 CCR 66264.192(g) AND 40 CFR 264.192(f)

The owner or operator shall provide the type and degree of corrosion protection recommended by an independent corrosion expert, based on the information provided under subsection (b)(3) of this section, or other corrosion protection if the Department believes other corrosion protection is necessary to ensure the integrity of the tank system during use of the tank system. The installation of a corrosion protection system that is field fabricated shall be supervised by an independent corrosion expert to ensure proper installation.

Groundwater at the site occurs at 30 feet bgs much below the bottom of the tank excavation. However, a corrosion protection plan was generated by Farwest Corrosion Control Company (Appendix C). This plan called for a cathodic protection system that was installed during the installation of the tank. The cathodic protection continuity test results are provided in Appendix C.

3.8 ASSESSMENT Per 22 CCR 66264.192(h) AND 40 CFR 264.192(g)

The owner or operator shall obtain and keep on file at the facility written statements by those persons required to certify the design of the tank system and supervise the installation of the tank system in accordance with the requirements of subsections (c) through (g) of this section, that attest that the tank system was properly designed and installed and that repairs, pursuant to subsections (c) and (e) of this section, were performed. These written statements shall also include the certification statement as required in section 66270.11(d) of this division.

A copy of this report, including the certification by the registered professional engineer, is to be kept on file at the facility. In addition, a copy of the Design Assessment report is to be kept on-site at the facility.

4.0 TANK SECONDARY CONTAINMENT ASSESSMENT

The tank secondary containment assessment has been prepared in compliance with Title 22 CCR 66264.193 and 40 CFR, Section 264.193. For brevity, items addressed in both the CCR and CFR, the text from the CCR has been used.

4.1 ASSESSMENT PER 22 CCR 66264.193(a) AND 40 CFR 264.193(a)

In order to prevent the release of hazardous waste or hazardous constituents to the environment, secondary containment that meets the requirements of this section shall be provided (except as provided in subsection (f) and (g) of this section):

(1) for all new tank systems or components, prior to their being put into service;

Secondary containment was included in the design of this storage system.

4.2 ASSESSMENT PER 22 CCR 66246.193(B) AND 40 CFR 264.193(B)

Secondary containment systems must be:

(1) designed, installed, and operated to prevent any migration of wastes or accumulated liquid out of the system to the soil, groundwater, or surface water at any time during the use of the tank systems, and

(2) capable of detecting and collecting releases and accumulated liquids until the collected material is removed.

The secondary containment on product and waste piping is designed to flow to collection sumps on top of the USTs. These sumps are each monitored with a leak detection probe

connected to the tank monitoring system. The sumps were leak tested with water by visual inspection during the installation after sealing of pipe entries.

4.3 ASSESSMENT PER 22 CCR 66264.193(C) AND 40 CFR 264.193(C)

To meet the requirements of subsection (b) of this section, secondary containment systems shall be at a minimum:

(1) constructed of or lined with materials that are compatible with the waste(s) to be placed in the tank system and shall have sufficient strength and thickness to prevent failure owing to pressure gradients (including static head and external hydrogeological forces), physical contact with the waste to which it is exposed, climatic conditions and the stress of daily operation (including stresses from nearby vehicular traffic).

(2) provided with a foundation or base underlying the tanks capable of providing support to the secondary containment system, resistance to pressure gradients above and below the system and capable of preventing failure due to settlement, compression or uplift. This base shall be free of cracks or gaps and sufficiently impervious to contain leaks, spills and accumulated precipitation until the collected material is detected and removed.

(3) provided with a leak detection system that is designed and operated so that it will detect the failure of either the primary or secondary containment structure or the presence of any release of hazardous waste or accumulated liquid in the secondary containment system within 24 hours, or at the earliest practicable time if the owner or operator can demonstrate to the Department that existing detection technologies or site conditions will not allow detection of a release within 24 hours, and

(4) sloped or otherwise designed or operated to drain and remove liquids resulting form leaks, spills or precipitation. Spilled or leaked waste and accumulated precipitation shall be removed from he secondary containment system within as timely a manner as it is

necessary to prevent overflow of the containment system, but within no more than 24 hours, or in as timely a manner as possible to prevent harm to human health and the environment, if the owner or operator can demonstrate to the Department that removal of the released waste or accumulated precipitation cannot be accomplished within 24 hours and that overflow of the containment system will not occur...

During installation, the slope of the secondary containment lines was verified with a level to slope back to the secondary containment sumps on top of the UST. The secondary containment integrity was tested with air at 5 psi for 30 minutes. After installation of the secondary containment pressure monitor, the leak detection system was tested and verified as operational. Results are attached as Appendix D.

4.4 ASSESSMENT PER 22 CCR 66264.193(d) AND 40 CFR 264.193(d)

Secondary containment for tanks shall include one or more of the following devices:

(1) a liner (external to the tank),

(2) a vault,

(3) a double walled-tank, or

(4) an equivalent device as approved by the Department.

The underground tanks installed at the Safety-Kleen site are double-wall steel tanks manufactured according to UL-58, UL-142, EPA 280.20, NFPA Titles 30 and 31, and the Uniform Fire Code. The design specified a double-wall steel tank with a fiberglass outer coating. The inner tank was constructed of 0.25-inch, hot-rolled, carbon steel. The outer tank was constructed of 7-gauge carbon steel with a 0.125-inch, (approximately 100 mils) fiberglass outer coating. The outer fiberglass coating consists of a fiberglass/resin coat and an additional seal coat of isophthalic resin.

4.5 ASSESSMENT PER 22 CCR 66264.193(e) AND 40 CFR 264.193(e)

In addition to the requirements of subsections (b), (c), and (d) of this section, secondary containment systems shall satisfy the following requirements...

(3) Double-walled tanks shall be:

(A) designed as an integral structure (i.e., an inner tank completely enveloped within an outer shell) so that any release from the inner tank is contained by the outer shell,

(B) protected, if constructed of metal, from both corrosion of the primary tank interior and of the external surface of the outer shell, and

(C) provided with a built-in continuous leak detection system capable of detecting a release within 24 hours, or at the earliest practicable time, if the owner or operator can demonstrate to the Department, and the Department concludes, that the existing detection technology or site conditions would not allow detection of a release within 24 hours.

The tanks and cathodic protection system were installed per Far West Corrosion Control Company (Appendix C). A Veeder-Root TLS-350 Tank Monitoring System was installed in the tank on September 29, 1993. The secondary containment of the tanks is designed as an integral structure (an inner tank completely enveloped within an outer shell) so that any release from the inner tank is contained within the outer shell.

4.6 ASSESSMENT PER 22 CCR 66264(f) AND CFR 264.193(f)

Ancillary equipment shall be provided with secondary containment (e.g., trench, jacketing, double-walled piping) that meets the requirements of subsections (b) and (c) of this section except for:

(1) aboveground piping (exclusive of flanges joints, valves and other connections) that are visually inspected for leaks on a daily basis;

(2) welded flanges, welded joints and welded connections, that are visually inspected for leaks on a daily basis;

(3) sealless or magnetic coupling pumps and sealless valves, that are visually inspected for leaks on a daily basis; and

(4) pressurized aboveground piping systems with automatic shut-off devices (e.g., excess flow check valves, flow metering shutdown devices, loss of pressure actuated shut-off devices) that are visually inspected for leaks on a daily basis.

All piping from the used-parts washing solvent handling area to the secondary containment sumps are secondarily contained. Secondary containment piping on the product pipe is continuous to the above-ground piping between the UST and the return-and-fill shelter. Aboveground waste and product piping within the return-and-fill shelter is inspected to verify tightness.

4.7 ASSESSMENT PER 22 CCR 66264.193(g)(h) and 40 CFR 264.193 (g)(h)

The owner or operator may obtain a variance from the requirements of this section for existing aboveground tanks in place, if the Department finds, as a result of a demonstration by the owner or operator that alternative design and operating practices, together with location characteristics, will prevent the migration of any hazardous waste or hazardous constituents into the groundwater or surface water at least as effectively as secondary containment during the active life of the tank system, or that in the event of a release that does migrate to groundwater or surface water, no substantial present or potential hazard will be posed a human health or the environment. New underground

tank systems may not, per a demonstration in accordance with paragraph (g)(2) of this section, be exempted from the secondary containment requirements of this section...

No variance was requested regarding this tank installation.

4.8 ASSESSMENT PER 22 CCR 66264(i) and 40 CFR 264.193(i)

All tank systems, until such time as secondary containment that meets the requirements of this section is provided, shall comply with the following:

(1) subsections (c)(2), (c)(4), (e)(1)(A), or (e)(2)(A) (except for tanks that do not contain free liquids), and (e)(1)(B) or (e)(2)(B);

(2) for nonenterable underground tanks, a leak tests that meets the requirements of section 66264l.191(c)(5) or other tank integrity method, as approved or required by the Department, shall be conducted at least annually;

(3) for other than nonenterable underground tanks, the owner or operator shall either conduct a leak test as in subsection (i)(2) of this section or develop a schedule and procedure for an assessment of the overall condition of the tank system by an independent, qualified professional engineer, registered in California, in accordance with section 66270.11(d). The schedule and procedure shall be adequate to detect obvious cracks, leaks, and corrosion or erosion that may lead to cracks and leaks. The owner or operator shall remove the stored waste from he tank, if necessary, to allow the condition of all internal tank surfaces to be assessed. The frequency of these assessments shall be based on the material of construction of the tank and its ancillary equipment, the age of the system, the type of corrosion or erosion protection used, the rate of corrosion or erosion observed during the previous inspection and the characteristics of the waste being stored or treated,

(4) for ancillary equipment, a leak test or other integrity assessment as approved by the Department shall be conducted at least annually,

(5) the owner or operator shall maintain on file at the facility a record of the results of the assessments conducted in accordance with subsection (i)(2) through (i)(4) of this section, and

(6) if a tank system or component is found to be leaking or unfit for use as a result of the leak test or assessment in subsections (i)(2) through (i)(4) of this section, the owner or operator shall comply with the requirements of section 66264.196.

This installation complies with the requirements of this section, therefore subsection (i) does not apply to this facility.

5.0 REFERENCES

TERA, Inc., June 1992. "Design Assessment, Proposed Used Solvent Storage Tank System, Los Angeles, California."

Title 22, California Code of Regulations (22CCR)

Title 40, Code of Federal Regulations (40 CFR)

American Petroleum Institute (API) Recommended Practices, (615)

Title 349, National Fire Protection Association (NFPA)

Title 30, 30A, 31, National Fire Protection Association (NFPA)

Uniform Fire Code

safeklee\losangel\skrptla.309

PROFESSIONAL CERTIFICATION

I certify that this document (Underground Storage Tanks Installation Report, Safety-Kleen Branch Service Center, 2918 Worthern Avenue, Los Angeles, California, November 1993) was prepared under my direction or supervision in accordance with a system designed to assure that qualified personnel properly gathered and evaluated the information submitted. Based on my inquiry of the person or persons who manage the system, or those persons directly responsible for gathering the information, the information submitted is, to the best of my knowledge and belief, true, accurate, and complete.

Frank J. Johns, II, P.E.

Registered Civil Engineer, #C-29313
Principal Engineer and Senior Associate
Geraghty & Miller, Inc.

REGISTERED PROFESSIONAL ENGINEER
FRANK J. JOHNS II
No. 29313
CIVIL
STATE OF CALIFORNIA

11-22-93

TERA Report No. 92-419-068

DESIGN ASSESSMENT
PROPOSED USED SOLVENT STORAGE TANK SYSTEM
LOS ANGELES, CALIFORNIA, BRANCH

For

SAFETY-KLEEN CORP.
Ontario, California

TERA, inc.

TERA, Inc.

5440 Hillcroft, Suite 200
P.O. Box 740038 Houston, Texas 77274 Tel. 713 772-0876 Fax 713 981-7713

92-419-068

TANK SYSTEM CERTIFICATION

the preparation & preliminary review etc.

I have supervised or performed a portion of the design assessment dated June 8, 1992, for the ~~Proposed Used Solvent~~ Storage Tank System at Safety-Kleen Corp.'s Los Angeles Branch. The EPA ID No. for this facility is CAT 000613935. I have supervised and reviewed the design assessment for this tank system.

With regard to the above duties, I certify under penalty of law that I have personally examined and am familiar with the information submitted in this document and all related attachments and that, based on my observations and my inquiry of those individuals immediately responsible for obtaining the information, I believe that the information is true, accurate, and complete. I am aware that there are significant penalties for submitting false information, including the possibility of fine and imprisonment.

John W. Cox

Registered Professional Engineer

California No. 35825

TERA, Inc.

P. O. Box 740038

Houston, Texas 77274

Signed: John W. Cox

Date: 6/18/92

REGISTERED PROFESSIONAL ENGINEER
JOHN WEST COX
No. 35825
CIVIL
STATE OF CALIFORNIA

TERA, Inc.

5440 Hillcroft, Suite 200
P.O. Box 740038, Houston, Texas 77274 Tel. 713 772-0376, Fax 713 981-7713

92-419-068

CERTIFICATION TO THE LETTER OF

TITLE 22 CALIFORNIA CODE OF REGULATION

SECTION 66270.11(d)

The following certification includes the wording "... all attachments were prepared under my direction or supervision...." For purposes here the meaning of "prepared" is interpreted in the sense of the Responsible Charge Criteria of Paragraph 404.1(c), Rules of the California State Board of Registration for Professional Engineers,1992, and includes the review of documents provided by Safety-Kleen and the judgement that their inclusion as attachments is appropriate for the intended purpose of the report. In the second sentence the wording "..., to be the best of my knowledge and belief, ..." is interpreted to mean "..., to the best of my knowledge and belief, ...".

I certify under penalty of law that this document and all attachments were prepared under my direction or supervision in accordance with a system designed to assure that qualified personnel properly gather and evaluate the information submitted. Based on my inquiry of the person or persons who manage the system, or those persons directly responsible for gathering the information, the information submitted is, to be the best of my knowledge and belief, true, accurate, and complete. I am aware that there are significant penalties for submitting false information, including the possibility of fine and imprisonment for knowing violations.

John W. Cox

Registered Professional Engineer

California No. 35825

TERA, Inc.

P.O. Box 740038

Houston, Texas 77274

Signed: _____

Date: 6/1/92

REGISTERED PROFESSIONAL ENGINEER
JOHN WEST COX
No. 35825
CIVIL
STATE OF CALIFORNIA

TERA, Inc.

[illegible] Suite 200
[illegible] Houston, Texas [illegible] 713 772-0876, Fax 713 361-[illegible]

June 8, 1992
92-419-068

SAFETY-KLEEN CORP.
3104 Centrelake, Suite 130
Ontario, California 91761

Attention: Mr. Skip Ricarte

Subject: Design Assessment
Proposed Used Solvent Storage Tank System
Los Angeles, California, Branch

Submitted here is our tank system design assessment report for the proposed used solvent tank system at your Los Angeles facility. The main report body summarizes assessment results in a format corresponding to the rules being addressed. Appendices are used for presenting detailed information.

We have enjoyed working with you on this interesting project. Please contact us at 713/772-0876 if you have any questions.

Very truly yours,

TERA, Inc.

Robert C. Speake
Senior Engineer

John W. Cox, Ph.D., P.E., CHMM
Vice-President & Chief Engineer

JWC/lm

Enclosures: Four (4) copies

Copy to: Jane Spetalnick
Eddie Young
Jennifer Jendras

CERTIFIED HAZARDOUS MATERIALS MANAGER
JOHN W. COX
2331
CHMM

REGISTERED PROFESSIONAL ENGINEER
JOHN WEST COX
No. 35825
CIVIL
STATE OF CALIFORNIA

92-419-068

DESIGN ASSESSMENT
PROPOSED USED SOLVENT STORAGE TANK SYSTEM
LOS ANGELES, CALIFORNIA, BRANCH

* * *

For

SAFETY-KLEEN CORP.
Ontario, California

* * *

By

TERA, Inc.
Houston, Texas

June, 1992

TABLE OF CONTENTS

Title	Page No.
SYSTEM DESCRIPTION	1
CONSIDERATIONS OF TANK SYSTEM ASSESSMENT	2
1. Design Standards	2
2. Hazardous Characteristics of the Waste	3
3. Corrosion Protection Measures	4
4. Protection from Vehicular Traffic	5
5. Ancillary Equipment	5
6. Design Requirements and Factors Listed in 22-66264.192(b)(6)	6
SECONDARY CONTAINMENT ASSESSMENT	9
1. Required Date	9
2. Materials of Construction	9
3. Foundation Design	9
. Leak Detection	10
.. Drainage	11
6. Device Requirements for Double-Wall Tank	11
7. Ancillary Equipment	12
CONCLUSION OF DESIGN ASSESSMENT	12

ILLUSTRATIONS

Title	Plate No.
Site Plan	-

APPENDIX A - Design Documentation

APPENDIX B - Characteristics of Waste

APPENDIX C - Material Compatibility Study

APPENDIX D - Seismic Considerations

APPENDIX E - Design Evaluation

APPENDIX F - Cathodic Protection Evaluation

DESIGN ASSESSMENT
PROPOSED USED SOLVENT STORAGE TANK SYSTEM

This report documents the design assessment of the proposed used solvent storage tank system at the Safety-Kleen Corp. facility in Los Angeles, California. The EPA ID No. for this facility is CAT 000613935. This assessment was performed and this report was written to address the requirements of 40 CFR 264.192 and 40 CFR 264.193, and the corresponding requirements of Title 22 California Code of Regulations Sections 66264.192 and 66264.193.

SYSTEM DESCRIPTION

Used mineral spirits solvent will be poured from containers into an aboveground steel drum washer, which is located in a dumpster, within a coated concrete containment area inside a return and fill shelter. The used solvent material will be pumped from the drum washer through the piping system to a 12,000-gallon capacity underground double-wall steel storage tank. Accumulated solvent and sludge will be periodically removed from the storage tank for offsite recycling. Solvent removal will be performed by a tank truck through a flexible hose and a 4-inch standpipe. Sludge and solids will be removed through a manway. The drum washer is to be vented to the atmosphere. The tank is to be vented to the atmosphere through pipe connections to an aboveground vent. The tank liquid is to be monitored by means of a computerized system which features automatic tank gauging, interstitial leak detection, sump riser liquid sensing, and a high level alarm.

SYSTEM DESCRIPTION (Continued)

For the purposes of this assessment, the used solvent storage tank system is defined to include the dumpsters and drum washers, the used solvent transfer pump, underground used solvent storage tank, the aboveground and belowground vent piping and the piping between the tank and the return and fill shelter, the computerized tank liquid monitoring system, and the secondary containment for the tank system components.

The drum washers, dumpsters, and pump and their secondary containment are reportedly the subject of a separate assessment previously prepared by another consultant for Safety-Kleen. These components are not addressed in this assessment.

A site plan is presented on Plate 1. A system schematic is included in Appendix A on Page A-3.

CONSIDERATIONS OF TANK SYSTEM ASSESSMENT

1. Design Standards (22-66264.192(b)(1))

The proposed system design criteria and materials of construction are shown in the documentation included in Appendix A. This information has been reviewed for compliance with the following applicable codes:

- National Fire Protection Association, NFPA 30, Flammable and Combustible Liquids Code, 1987 Ed. (tank and piping)
- Underwriters Laboratories, UL 58, Steel Underground Tanks for Flammable and Combustible Liquids (tank)

CONSIDERATIONS OF TANK SYSTEM ASSESSMENT (Continued)

1. Design Standards (22-66264.192(b)(1)) (continued)

- Steel Tank Institute, ACT-100, Specification for the Fabrication of FRP Clad/Composite Underground Storage tanks (tank)
- Petroleum Equipment Institute, PEI/RP100, Recommended Practices for Installation of Underground Liquid Storage Systems (tank buoyancy and piping)

Calculations which demonstrate compliance with applicable codes for primary structural considerations of the tank are given in Appendix B. The design review shows that:

- the design conforms to the standards referenced above, and
- the design standards are appropriate for this application.

The conclusion upon review of the documents and review of the design is that the design of this tank system is appropriate for the intended service. The structural strength, support, and seams appear to be adequately designed.

2. Hazardous Characteristics of the Waste (22-66264.192(b)(2))

The waste to be stored in this system is to be a used mineral spirits (petroleum distillate) solvent plus water, solids, oil and grease from a variety of cleaning and degreasing operations. Documentation describing the waste material is included in Appendix B.

CONSIDERATIONS OF TANK SYSTEM ASSESSMENT (Continued)

2. Hazardous Characteristics of the Waste (22-66264.192(b)(2)) (Continued)

The material is two-phase (liquid and sludge) at ambient temperatures. Its primary hazardous characteristic is ignitability, EPA hazard Code I. Materials such as heavy metals from cleaning operations may also cause the used solvent and/or sludge to exhibit the characteristics of toxicity by the Toxicity Characteristic Leaching Procedure, EPA hazard Code E.

3. Corrosion Protection Measures (22-66264.192(b)(3))

Aboveground piping is to be either galvanized or left with its mill finish; both have proved to provide adequate external corrosion protection at similar Safety-Kleen facilities elsewhere.

System components are not to be provided with any specific internal corrosion protection measures. However, the compatibility study at Appendix C, prepared by another Safety-Kleen consultant, concludes that the used solvent material studied is compatible with the carbon steel and copper alloy materials of which the system is constructed.

The double-wall underground tank is to be protected from external corrosion by a 100-mil fiberglass coating on the outer shell of the tank. This composite design prevents contact between the steel tank and soil or water. Underground piping is to be double-wall, with corrosion protection provided by the polyurethane construction material of the exterior wall.

CONSIDERATIONS OF TANK SYSTEM ASSESSMENT (Continued)

3. Corrosion Protection Measures (22-66264.192(b)(3)) (Continued)

Since no metal component is in long-term contact with soil or water, a cathodic protection system is not required. However, Safety-Kleen has stated that they intend to provide the tank with cathodic protection as additional protection against corrosion. An evaluation of a cathodic protection system for the Glasteel UST proposed for Los Angeles was recently conducted by TERA for Safety-Kleen. The report for this work is included here in Appendix F.

4. Protection from Vehicular Traffic (22-66264.192(a)(4))

The proposed storage tank and a portion of the piping system will be located beneath areas with truck traffic. Protection from vehicular traffic is to be provided by soil cover and by a concrete slab. Based on manufacturer's recommendations, the calculations shown in Appendix B and compliance with recommendations of applicable design codes, the protection provided for underground components appears to be adequate.

Other ancillary components of the tank system are the aboveground piping which is located within or attached to the return-and-fill shelter, and thus protected from vehicular traffic.

5. Ancillary Equipment (22-66264.192(f))

Review of system piping design indicates that the design and support of system piping meets PEI/RP 100-87 requirements and is therefore considered to be adequate for this service, except as noted hereinafter under "Seismic Considerations".

CONSIDERATIONS OF TANK SYSTEM ASSESSMENT (Continued)

6. Design Requirements and Factors Listed in 22-66264.192(b)(6)

The following design aspects have been evaluated to determine if the tank has sufficient shell strength and venting to insure that it will not collapse or rupture in its intended service. Additional information further documenting this evaluation is in the Appendices.

A. Foundation and Structural Support (22-66264.192(b)(5)(a)(b) and (c))

The tank installation drawing and manufacturers instructions at Appendix A show that the tank is to be installed in compacted backfill and anchored in place by concrete deadmen; minimum tank bury depth is to be 4 feet. This foundation design has been reviewed to evaluate its stability under gravity, seismic, and buoyancy loads. This review shows that, though the tank is not expected to be installed in a saturated zone, even if it were, its foundation design is adequate to resist the effects of buoyancy. See pg. Appendix E-4

Foundations extend below the expected frost line to avoid damage from frost heave. This is regarded as an unlikely event in Los Angeles.

B. Seams

Documentation in Appendix A show that the tank is to be fabricated to UL 58 standards. This standard provides detailed instructions for welding of all joints and specifies

CONSIDERATIONS OF TANK SYSTEM ASSESSMENT (Continued)

B. Seams (Continued)

factory pressure testing of the completed tanks. Thus, the seams of the tanks are considered to be designed to be sufficiently resistant to collapse or rupture.

C. Pressure Controls

A 2" diameter galvanized iron pipe vent line underground is to run from the tank and aboveground up the side of the return and fill shelter and terminate above the roof line. NFPA 30 specifies underground tank vent pipe sizes based on tank filling and withdrawal rates and the length of the vent pipe (paragraph 2-4.5.2 and Table 2-10). NFPA allows the use of a 1-1/2 inch vent pipe for filling/withdrawal rates up to 500 gpm with a pipe length of up to 100 feet with seven elbows. Typical Safety-Kleen fill/withdrawal rates are below 500 gpm and the vent pipe length at Los Angeles is less than 100 feet. The installation schematic in Plate 1 shows two elbows at the tank and another one to turn the vent line up the warehouse wall. In addition, there may be two 45° elbows to take the vent lines clear of the return and fill shelter eave. Thus, it appear there are to be less than seven elbows in the vent line.

Considering the satisfactory performance of the tank vents at similar Safety-Kleen facilities, together with the low pumping rates of the loading and unloading pumps (200 gpm or less), it is concluded that venting of the UST's is adequate for breathing, loading, and unloading for the tanks so that the tanks will not rupture or collapse.

CONSIDERATIONS OF TANK SYSTEM ASSESSMENT (Continued)

D. Seismic Considerations

Seismic considerations are given in Appendix D. After reviewing the data presented there it is concluded that the risk of seismic damage to the subject UST system is minimal if the following precautions are taken by Safety-Kleen.

- Assure there is no risk of soil or backfill liquefaction at the tank site;
- Provide flexible connections for all piping to the tank arranged to permit considerable relative movement without overloading the pipe or connections. Swing joints are not acceptable for this purpose;
- For piping passing through a rigid wall or slab, provide sufficient flexibility at the soil/structure interface to tolerate considerable relative movement at this point. Swing joints are not acceptable for this purpose.

E. Tank Shell Thickness

Design plate thicknesses in Appendix A and comparisons in Appendix E with minimums required by UL 58 show that tank plate thicknesses meet code requirements and therefore are satisfactory. (Table 3.1 of this standard sets minimum thicknesses for steel tank plate at 0.240 inches for the tanks. Minimum corresponding design thicknesses are 0.25 inches.)

SECONDARY CONTAINMENT ASSESSMENT

Secondary containment for the proposed underground tank and piping is to be provided by double-wall components with interstitial leak detection. Design data for the secondary containment system is given in Appendix A.

1. Required Date (22-66264.193(a)(1))

Since the proposed tank system is new, secondary containment is required before the tank system is placed in service. The proposed system meets this requirement since secondary containment is scheduled for completion prior to the tank system being placed in service.

2. Materials of Construction (22-66264.193(c)(1))

The proposed tank secondary containment system is to be constructed of fiberglass-coated steel designed for this type of service. As discussed in an earlier section, the materials of construction for primary and secondary components are compatible with the wastes to be stored.

3. Foundation Design (22-66264.193(c)(2))

The foundation of the storage tank will be provided by compacted backfill and concrete deadmen, as shown in the drawings of Appendix A. As shown in the calculations presented in Appendix E, the foundation design will provide satisfactory support, resistance to pressure gradients, and protection against settlement, compression and uplift.

SECONDARY CONTAINMENT ASSESSMENT (Continued)

4. Leak Detection (22-66264.193(c)(3))

Continuous-monitor leak detection is planned for use with this tank and piping. In accordance with clarified requirements (at 53 FR 34079), the leak detection for the tank will be designed to promptly detect any release from the primary tank into the outer shell which serves as secondary containment. The tank is to be provided with a leak-sensing probe in the interstitial space between the primary and secondary tank walls to allow access to the bottom of the secondary containment tank for leak detection. An automated leak detection system using this probe in conjunction with a remote alarm system is to be the primary leak detection method. Additionally, a magnetostrictive in-tank sensing probe inserted through a nozzle welded to the (center) manway cover will automatically monitor liquid level in the tank and provide overfill protection. Liquid-detecting sensors will also be installed in each sump riser. A computerized control console in the office area provides a variety of reports from these sensors and probes by means of a liquid crystal display (LCD) or a thermal printer. This console activates a visual and audible alarm located near the tank if leakage in the interstitial space is detected or if the tank is in danger of being overfilled. Automated or daily visual inspection for liquids will allow for prompt detection of leaks.

Aboveground components of the tank systems will be available for daily visual inspections for leakage, structural distress of containment components, and presence of accumulated liquids.

SECONDARY CONTAINMENT ASSESSMENT (Continued)

5. Drainage (22-66264.193(c)(4))

The computerized tank liquid monitoring system has the capability of detecting the presence of liquid in the interstitial space and sump risers (which are designed to be water tight). The design drawings call for the tank to be installed on a sloping backfill so that any liquid in the interstitial space will slope to one end to facilitate detection and removal. Drainage and removal of accumulated liquids from the interstitial space can be accomplished by pumping the liquids through the riser pipe. A sump pump can be used to remove the liquid from the sumps.

6. Device Requirements for Double-Wall Tank (22-66264.193(e)(3))

The proposed containment for the tank is designed to comply with requirements for double-wall tank devices, as provided in 22-66264.193(d) and (e).

a) As shown in the drawings of Appendix A, the tank is designed as an integral structure, featuring an inner tank within an outer shell. A release from the inner tank will be contained by the outer shell.

b) As discussed in an earlier section, the primary tank steel interior is expected to be compatible with the wastes to be stored. The external surface of the outer shell is to be constructed of fiberglass for corrosion protection.

c) As discussed above, the tank is to be provided with a built-in, continuous leak detection system that is capable of detecting a release within 24 hours.

SECONDARY CONTAINMENT ASSESSMENT (Continued)

7. Ancillary Equipment (22-66264.193 (f))

Underground piping will be provided with containment in the form of double-wall piping with interstitial spaces drained to the tank's sump risers for leak detection. Aboveground piping will either be double-wall or have welded joints for daily visual inspection for signs of leakage.

CONCLUSIONS OF DESIGN ASSESSMENT

Based on the information and evaluations presented above, and assuming that the precautionary measures listed under Seismic Considerations are taken, the proposed used solvent tank system at the Safety-Kleen Corp. facility in Los Angeles, California, appears to be adequately designed; with sufficient structural strength, and sufficient compatibility with the wastes being stored to not leak, collapse, rupture, or fail in its anticipated condition and service. The proposed system design appears to satisfy the requirements of 22-66264.192. The proposed secondary containment system appears to satisfy the requirements of 22-66264.193.

PART V

AIR EMISSIONS STANDARDS

PART V

AIR EMISSIONS STANDARDS

V. AIR EMISSIONS STANDARDS

PROCESS VENTS

A. Description of Process Vents and All Associated Operations (22 CCR 66264.10, 66264.1030(b), 66264.1031, 66264.1032, 66270.24(b) (40 CFR 264.1030(b), 264.1031, 264.1032, 270.24(b)) For each operation at the facility that manages hazardous waste with organic concentrations of at least 10 ppmw, provide the information listed below:

1. Distillation

Not applicable. There are no distillation units at this Safety-Kleen facility.

a. Process description

b. Location of each unit

c. Identification of all affected process vents

d. Annual throughput and operating hours of each unit

e. Estimated controlled and uncontrolled emissions rates per vent and per facility

f. Data supporting estimates of vent emissions and emission reduction by add-on control devices

g. Data used to determine if a process vent is subject to regulation

2. Fractionation

Not applicable. There are no fractionation units at this Safety-Kleen facility.

a. Process description

b. Location of each unit

c. Identification of all affected process vents

d. Annual throughput and operating hours of each unit

e. Estimated controlled and uncontrolled emissions rates per vent and per facility

f. Data supporting estimates of vent emissions and emission reduction by add-on control devices

g. Data used to determine if a process vent is subject to regulation

3. Thin-film evaporation

Not applicable. There are no thin-film evaporation units at this Safety-Kleen facility.

a. Process description

b. Location of each unit

c. Identification of all affected process vents

d. Annual throughput and operating hours of each unit

e. Estimated controlled and uncontrolled emissions rates per vent and per facility

f. Data supporting estimates of vent emissions and emission reduction by add-on control devices

g. Data used to determine if a process vent is subject to regulation

4. Solvent extraction

Not applicable. There are no solvent extraction units at this Safety-Kleen facility.

a. Process description

b. Location of each unit

c. Identification of all affected process vents

d. Annual throughput and operating hours of each unit

e. Estimated controlled and uncontrolled emissions rates per vent and per facility

f. Data supporting estimates of vent emissions and emission reduction by add-on control devices

g. Data used to determine if a process vent is subject to regulation

5. Air stripping

Not applicable. There are no air stripping units at this Safety-Kleen facility.

a. Process description

b. Location of each unit

c. Identification of all affected process vents

d. Annual throughput and operating hours of each unit

e. Estimated controlled and controlled emissions rates per vent and per facility

f. Data supporting estimates of vent emissions and emission reduction by add-on control devices

g. Data used to determine if a process vent is subject to regulation

6. Steam stripping

Not applicable. There are no steam stripping units at this Safety-Kleen facility.

a. Process description

b. Location of each unit

c. Identification of all affected process vents

d. Annual throughput and operating hours of each unit

e. Estimated controlled and uncontrolled emissions rates per vent and per facility

f. Data supporting estimates of vent emissions and emission reduction by add-on control devices

g. Data used to determine if a process vent is subject to regulation.

B. Methods for Reducing Emissions from Process Vents

Provide engineering calculations, performance test data, or other data to demonstrate reduced emissions in accordance with 1, 2, or 3 below:

Not applicable. There are no process or closed vents associated with distillation, fractionation, thin-film evaporation, solvent extraction, air stripping, or steam stripping units at this Safety-Kleen facility.

1. Reduce total organic emissions below 1.4 kg/hr, and 2.8 million grams per year
(40 CFR 264.1032(a)(1) and (c), 270.24(b))

2. Reduce total organic emissions by 95% by weight with use of control device
(40 CFR 264.1032(a)(2) and (b), 270.24(b))

3. Reduce emissions for closed-vent systems under the following operating conditions:

Not applicable. There are no closed-vent systems at this Safety-Kleen facility.
(40 CFR 264.1032(a) and (b), 264.1033(b) - (j), 270.24(b))

a. Control device involving vapor recovery: recover at least 95% by weight of organic vapors, or reduce total organic emissions below 1.4 kg/hr and 2.8 million grams per year
(40 CFR 264.1032(a)(1) and (b))

b. Closed combustion device: recover at least 95% by weight of organic emissions, and achieve 20 ppmw or one-half second residence time at 760 degrees Celsius
(40 CFR 264.1033(c)

c. Flares shall be operated under the following four conditions:

(40 CFR 264.1033(d) and (c))

1. **No visible emissions (using Reference Method 22 and a 2-hour observation period)**

2. **A flame present at all times**

3. **An acceptable net heating value**

4. **Appropriate exit velocity**

d. **Carbon adsorption system: recovery at least 95% by of organic vapors**
(40 CFR 264.1032(a)(2) and (b), 270.24(b))

C. Monitoring and Inspection of Control Devices

Not applicable. There are no processes or closed vents associated with distillation, fractionation, thin-film evaporation, solvent extraction, air stripping, or steam stripping units at this Safety-Kleen facility.

1. **Inspect each control device at least daily**
(40 CFR 264.1033(f)(3), 270.14(b)(5))

2. **Monitor vent flow rate at least once an hour**
(40 CFR 264.1033(f)(1), 270.14(b)(5))

3. **Continuous monitoring:**
(40 CFR 264.1033(f)(2), 270.14(b)(5))

a. **Thermal vapor incinerator: one temperature sensor**

b. **Catalytic vapor incinerator: two temperature sensors**

c. **Flare: heat sending device**

d. **Boiler or process heater with heater input capacity of at least 44 MW: recorder which indicates good combustion practices**

e. **Condenser: device to measure organic vapors or temperature sensor**

f. Carbon adsorption system: device to measure organic vapors or recorder that verifies predetermined regeneration cycle

4. Alternate monitoring of control device: describe procedures and schedule for measuring applicable monitoring parameters (40 CFR 264.1033(i), 270.14(b))

5. Inspection/replacement of carbon adsorption systems:

a. Regenerable - specify inspection and replacement schedules (40 CFR 264.1033(g), 270.14(b)(5))

b. Nonregenerable
Specify monitoring and replacement schedules:
(40 CFR 264.1033(h), 270.14(b)(5))

1. Monitor daily, or at intervals no greater than 20% of carbon breakthrough time

2. Carbon must be replaced upon breakthrough or more frequently

6. For other control devices not listed above, specify inspection/monitoring procedures and schedule (40 CFR 264.1033(j), 264.1035(b)(3), 270.14(b)(5))

7. Use Reference Method 21 for compliance testing (40 CFR 264.1034, 270.24(d))

8. Control devices must be operated at all times when emissions may be vented to them (40 CFR 264.1033(l))

D. Closed Vent Systems
(22 CCR 66264.1033(k)(1), 66270(b)(5), 66270.24(d)
(40 CFR 264.1033(k) (l), 270.14(b)(5), 270.24(d))

Not applicable. There are no process or closed vents associated with distillation, fractionation, thin-film evaporation, solvent extraction, air stripping, or steam stripping units at this Safety-Kleen facility.

1. No detectable emissions (i.e., emissions must be less than 500 ppm above background)

2. Monitoring must be done:

a. Date system becomes subject to regulations

b. Annually

c. Other times as requested by Department

3. Vent repairs: a. First repair attempt must be within 5 days

b. Specify repair procedures

c. Vents must be repaired within 15 days

4. Closed-vent systems must be operated at all times when emissions may be vented to them

E. Recordkeeping and Reporting Requirements for Central Devices and Closed Vent Systems

Not applicable. There are no process or closed vents associated with distillation, fractionation, thin-film evaporation, solvent extraction, air stripping, or steam stripping units at this Safety-Kleen facility.

1. Demonstrate compliance with all applicable recordkeeping and documentation requirements, including:
(22 CCR 66264.1033, 66264.1035, 66270.24(d))
(40 CFR 264.1033, 264.1035, 270.24(d))

a. All recordkeeping requirements specified in 264.1035

b. Information references and sources used to document compliance with process vent standards

c. Records, including dates, of compliance tests for 264.1033(k)

d. Control device design information

e. Owner/operator certification of representativeness of operating parameters

f. Owner/operator statement certifying control device efficiency is at least 95% by weight

2. Submit semi-annual report
(22 CCR 66264.1036)
(40 CFR 264.1036)

3. Implementation schedule (if closed vent system and control device cannot be installed by date facility is subject to requirements)
(22 CCR 66264.1033(a)(2) and 66270.24(a))
(40 CFR 264.1033(a)(2) and 270.24(a))

4. Performance test plan (if an unspecified control device is used, and test data is to be used to determine organic removal efficiency)
(22 CCR 66264.1032, 662641035(b)(3), 66270.24(c))
(40 CFR 264.1032, 264.1035(b)(3), 270.24(c))EQUIPMENT LEAKS

F. Equipment Description
(22 CCR 66264.1050, 66270.25(a))
(40 CFR 264.1050, 270.25(a))
For each piece of Equipment associated with operations that manage hazardous wastes with organic concentrations of at least 10 percent, provide the following information:

The equipment at the Los Angeles Service Center is identified and tagged as required.

1. Identification number

Each piece of equipment is identified using a unique number.

2. Unit identification

Units are identified as pump valves and flanges used for the management of spent mineral spirits.

3. Location

See Figure IV-4A.

4. Type of equipment

The equipment includes pumps, valves, and flanges used to manage spent mineral spirits.

5. Percent by weight of total organics in equipment waste stream

The spent mineral spirits approach 100 percent, by weight, organic

compounds.

6. Physical state of waste

Spent mineral spirits are liquid at normal operating conditions.

7. Method of compliance

As described below in Section V(M).

a. Monthly leak detection and repair

b. Dual mechanical seals

c. Other

G. Standards for Pumps in Light Liquid Services (22 CCR 66264.1052, 66264.1059, 66264.1063, 66270.14(b)(5), 66270.25(d)) (40 CFR 264.1052, 264.1059, 264.1063, 270.14(b)(5), 270.25(d))

Not applicable (N/A). The spent mineral spirits solvent approaches 100 percent by weight organic, and the vapor pressure is typically 0.27kPa at 68 degrees F. That is considered a heavy liquid.

1. Monthly monitoring for leaks using Method 21 (22 CCR 66264.1052(a)(1)) (40 CFR 264.1052(a)(1))

N/A

2. Weekly visual inspection for pump seal leakage (22 CCR 66264.1052(a)(2)) (40 CFR 264.1052(a)(2))

N/A

3. Leak detection criteria (22 CCR 66264.1052(b), 264.1063) (40 CFR 264.1052(b), 264.1063)

N/A

4. Leak repairs: (22 CCR 66264.1052(c), 66264.1059, 66270.25(d)) (40 CFR 264.1052(c), 264.1059, 270.25(d))

N/A

H. Standards for Compressors
(22 CCR 66264.1053, 66264.1059, 66270.25(d))
(40 FR 264.1053, 264.1059, 270.25(d))

Not applicable. There are no compressors that are used to manage spent mineral spirits at this Safety-Kleen facility.

1. **Barrier fluid pressure must be greater than compressor stuffing box pressure**
   (40 CFR 264.1053(b)(1))

2. **Barrier fluid system must be connected by a closed-vent system to a control device**
   40 CFR 264.1053(b)(2))

3. **No detectable atmospheric emissions of hazardous contaminants from the barrier system**
   (40 CFR 264.1053(b)(3))

4. **Check failure sensor daily, or use an audible alarm checked monthly**
   (22 CCR 264.1053(d)(3)
   (40 CFR 264.1053(d) (3))

5. **Leak detection criteria**
   (22 CCR 66264.1053(f))
   (40 CFR 264.1053(f))

6. **Leak repairs:**
   (22 CCR 66264.1053(g), 264.1059)
   (40 CFR 264.1053(g), 264.1059)

   a. **First repair attempt must be within 5 days**

   b. **Specify repair procedures**

   c. **Leaks must be repaired within 15 days, unless an extension is granted under 66264.1059**

7. **Specific exceptions to these standards**
   (22 CCR 66264.1053(h) and (i))
   (40 CFR 264.1053(h) and (i))

I. Standards for Pressure Relief Devices in Gas/Vapor Service
(22 CCR 66264.1054, 270.25(d))

(40 CFR 264.1054, 270.25(d))

Not applicable. There are no pressure relief devices in gas/vapor service at this Safety-Kleen facility.

1. **Except during pressure releases, pressure relief devices must not release detectable emissions (i.e., emissions must be less than 500 ppm above background levels)**
   (22 CCR 66264.1054(a))
   (40 CFR 264.1054(a))

2. **Within 5 days after a pressure release, there must be no detectable emissions from the pressure relief device**
   (22 CCR 66264.1054(b))
   (40 CFR 264.1054(b))

3. **Specific exceptions to these standards**
   (22 CCR 66264.1034(c))
   (40 CFR 264.1034(c))

J. Standards for Connecting Systems
(22 CCR 66264.1055, 66270.25(d))
(40 CFR 264.1055, 270.25(d))

Not applicable. The underground storage tanks systems do not have sampling connection systems that require closed-purge systems as closed-vent systems.

1. **Each closed-purge system or closed-vent system must either:**
   (22 CCR 66264.1033, 66264.1055(a) and (b), 66264.1060)
   (40 CFR 264.1033, 264.1055(a) and (b), 264.1060)

   a. **Release no detectable air emissions into the hazardous waste management process line, or**

   b. **Release no detectable air emissions to the recycled hazardous waste stream, or**

   c. **Meet operational conditions for control devices in 264.1033 and 264.1060**

2. **Specific exceptions to these standards**
   (22 CCR 66264.1055(c))
   (40 CFR 264.1055(c))

   Not applicable. There are no in-situ sampling systems.

K. Standards for Open-Ended Valves and Lines
(22 CCR 66264.1056, 66270.25(d))
(40 CFR 264.1056, 270.25(d))

1. Each open-ended valve or line must be equipped with a cap, blind flange, plug, or a second valve that seals the open end at all times except during operations
(40 CFR 264.1036(a))

Not applicable. Lines are not subject to local air permitting requirements.

2. Each double block and bleed system must be equipped with a cap, blind flange, plug, or a second valve that seals the open end at all times except during operations
(22 CCR 66264.1056(c))
(40 CFR 264.1056(c))

Not applicable. No double block and bleed system exists in facility design.

3. A second valve shall be operated so that the primary valve is closed before the secondary valve is opened
(22 CCR 66264.1056(b))
(40 CFR 264.1056(b))

Not applicable. No valves are used in facility design.

L. Standards for Valves in Gas/Vapor Service or Light Liquid Service
(22 CCR 66264.1057, 66270.25(d))
(40 CFR 264.1057, 270.25(d))

1. Monitoring schedule based on detection of leaks and predetermined schedule
(22 CCR 66264.1057(a) and (c))
(40 CFR 264.1057(a) and (c))

2. Leak detection criteria
(22 CCR 66264.1057(b))
(40 CFR 264.1057(b))

3. Leak repairs:
(22 CCR 66264.1057(b))
(40 CFR 264.1057(a), 264.1059)

a. First repair attempt must be within 24 hours

b. Specify repair procedures

c. Leaks must be repaired within 15 days, unless an extension is granted under 66264.1059

4. Alternate standards
(22 CCR 66264.1061, 264.1062)
(40 CFR 264.1061, 264.1062)

5. Specific exceptions to these standards
(22 CCR 66264.1057(f) - (h)
(40 CFR 264.1057(f) - (h)

M. Standards for Pumps and Valves in Heavy Liquid Service, Pressure Relief Devices in Light Liquid or Heavy Liquid Service, and Flanges and Other Connections
(22 CCR 66264.1058, 66270.25(d))
(40 CFR 264.1058, 270.25(d))

At the Los Angeles Service Center, the Subpart BB standards apply to the pumps, valves, and flanges used for the management of spent mineral spirits solvent. The spent mineral spirits solvent approaches 100 percent by weight organic, and the vapor pressure is typically 0.27kPa at 68 degrees F. That is considered a heavy liquid. Therefore, Section 22 CCCR 66264.1058, 66264, 1059, 66264.1063, 66264.1064, and 66264.1065 apply to the Safety-Kleen Los Angeles Service Center when waste mineral spirits is stored in tanks.

Equipment subject to Subpart BB requirements is identified on Figure IV-4A. Such equipment is tagged, as required.

1. Monitoring within 5 days after leak is found by sight, sound, smell, or other detection method
(22 CCR 66264.1058(a), 66264.1063(b))
(40 CFR 264.1058(a), 264.1063(b))

Pumps, valves, and flanges in heavy liquid service identified above shall be inspected using the Subpart BB Inspection Form, example of which is included in Appendix VIII-1.

Monitoring will not be performed with a direct reading volatile hydrocarbon detector. The spent mineral spirits is a heavy liquid. As such, a leak will be detected visually, but may not exceed 10,000 ppm. Use of a portable leak detection monitoring instrument for spent mineral spirits will not satisfy the intent of the regulations, because heavy liquids may not be

detected using a volatile hydrocarbon detector when exceeding 10,000 ppm. Safety-Kleen will therefore performs inspections using visual, olfactory, and audible methods.

Results of inspections and actions taken in response to inspection shall be recorded on the Subpart BB Inspection Log. Repairs will be documented on the Subpart BB Repair Log. Example of this form are included in Appendices VIII-1 and V-1. Completed forms will be maintained as part of the facility's operating record for a minimum of three years.

2. Weekly visual inspection for pump seal leakage
(22 CCR 66264.1052(a)(2))
(40 CFR 264.1052(a)(2))

Each pump, valve, and flange will be inspected each operating day for any evidence of leakage. Leakage is indicated by any sign of liquids dripping from the device, a dripping or hissing sound, or solvent odor at the pump or valve. Results of the inspection will be recorded on the Inspection Log Sheet for Daily Inspection of Tank Equipment, which will be kept in the Facility Operating Record.

3. Leak detection criteria
(22 CCR 66264.1058(B))
(40 CFR 264.1058(B))

Each pump, valve, and flange will be inspected each operating day for any evidence of leakage. Leakage is indicated by any sign of liquids dripping from the device, a dripping or hissing sound, or solvent odor at the pump or valve. Results of the inspection will be recorded on the Inspection Log Sheet for Daily Inspection of Tank Equipment, which will be kept in the Facility Operating Record.

4. Leak repairs:
(22 CCR 66264.1058(c), 66264.1059)
(40 CFR 264.1058(c), 264.1059)

If evidence of leakage is detected, a Leak Detection and Repair form must be completed. All completed Leak Detection and Repair forms will be kept in the Facility Operating Record. If a leak is detected, it must be monitored within 5 days of detection to determine if there is indeed a leak. Visual, auditory, or olfactory senses should be used to make this determination.

If a leak is detected, it must be marked with a weatherproof and readily visible identification, showing the equipment identification number, the

date evidence of a potential leak was found, and the date the leak was detected.

a. First repair attempt must be within 24 hours (22 CCR 66264.1058(c)(2))

If a leak is detected a first attempt at repair must be made no later 24 hours after the leak is detected.

b. Leaks must be repaired within 15 days, unless an extension is granted under 66264.1059 (22 CCR 66264.1058(c)(1))

When a leak is detected, it must be repaired as soon as practical, but no later than 15 calendar days after being detected.

5. Specific exceptions to these standards

Not applicable. There are no specific exceptions to these standards.

N. Compliance Testing (22 CCR 66264.1063) (40 CFR 264.1063) Use Reference Method 21 for Compliance Testing

See Section V.M.1.

O. Recordkeeping and Reporting Requirements for Equipment

1. Demonstrate compliance with all applicable recordkeeping and documentation requirements, including: (22 CCR 66264.1033, 66264.1060. 66264.1064, 66270.25(d) and (e)) (40 CFR 264.1033, 264.1060. 264.1064, 270.25(d) and (e))

Results of inspections and actions taken in response to inspection shall be recorded on the Subpart BB Inspection Log, example of which is included in Appendix V-1. Completed forms will be maintained as part of the facility's operating record for a minimum of three years.

a. Labeling and recordkeeping requirements specified in 66264.1064 - As specified above, equipment is identified and tagged. All records are kept as part of the facility operating record.

b. Information references and sources used to document

compliance with closed-vent and control device standards - Information sources are documented in the operating record.

c. **Records, including dates, of compliance tests for 66264.1033(k) -** All records, including dates, of compliance tests are kept in the operating record.

d. **Control device design information -** This section is not applicable.

e. **Owner/operator certification of representativeness of operating parameters -** See Appendix I-5.

f. **Owner/operator statement certifying control device efficiency is at least 95% by weight -** Not applicable.

2. Submit semi-annual report
(22 CCR 66264.1065, 66270.25(a))
(40 CFR 264.1065, 270.25(a))

Safety-Kleen will prepare and submit a semi-annual report, which will include the information specified in 22 CCR 66264.1065, as needed.

3. Implementation schedule (if closed vent system and control device cannot be installed by date facility is subject to requirements)
(40 CFR 264.1033(a)(2), 264.1064(b)(2), 270.25(b) and (d))

Not applicable. Closed vent system/control device is not required.

4. Performance test plan (if an unspecified control device is used, and test data is to be used to determine organic removal efficiency)
(40 CFR 264.1035(b)(3), 264.1064(b)(3), 270.25(c) and (d)

Not applicable. An unspecified control device is not planned for this Safety-Kleen facility.

P. Subpart CC Standards
(22 CCR 66270.14(a), 66270.27, 66264.1080 (a) - (d))
(40 CFR 270.14(a), 270.27, 264.1080 (a) - (d))

1. Subpart CC standards apply to all facilities that treat, store, or dispose of hazardous waste in tanks, surface impoundments or containers subject to chapter 14, article 9, 10, or 11, except as provided otherwise.
(22 CCR 66264.1082(a))

Standards only apply to tanks and containers that have design capacity of equal or greater than 0.1 cubic meters (26 gallons). The Los Angeles facility uses tanks and containers greater than 26 gallons.

2. Exclusions:

a. A tank, surface impoundment, or container for which all hazardous waste entering the unit has an average volatile organic carbon (VOC) concentration, at the point of waste origination, of less than 500 Parts per million by weight (ppmw)
(22 CCR 66264.1082(c)(1)

Not applicable. Hazardous wastes entering the unit have VOC concentration of greater than 500 ppmw.

b. A tank, surface impoundment, or container for which all hazardous waste entering the unit has been reduced by an organic destruction or removal process that achieves specified criteria.
(22 CCR 66264.1082(c)(2)

Not Applicable.

c. A tank used for biological treatment of hazardous waste that destroys or degrades the organics contained in the hazardous waste such that the Requirements of 66264.1082(c)(2)(D) are Met.
(22 CCR 66264.1082(c)(3)

Not Applicable.

d. A tank, surface impoundment or container for which hazardous waste placed in the unit meets applicable organic concentration limits or has been treated by appropriate treatment technology.
(22 CCR 66264.1082(c)(4)

Not Applicable.

e. A tank located inside an enclosure vented to a control device that is used for bulk feed of hazardous waste to a waste incinerator that meets specified criteria.
(22 CCR 66264.1082(c)(5))

Not Applicable.

f. Waste determination to pursue an exemption (22 CCR 264.1084)

Not Applicable. Safety-Kleen is not pursuing exemptions from this part.

3. The provisions of this section apply to the control of air pollutant emissions from tanks for which section 66264.1082(b) references the use of this section for such air emission control. (22 CCR 66264.1084(b)(1))

22 CCR 1082(b) references the use of this section for control of air pollutant emissions from tanks in which hazardous waste is managed. Therefore the Los Angeles Service Center uses these standards for control of air pollutant emissions from tanks. See Appendix V-2 for the Subpart CC Compliance Plan.

a. For a tank that manages hazardous waste that meets all of the conditions specified in 66264.1084(b)(1)(A) through (b)(1)(C), the owner or operator shall control air pollutant emissions from the tank in accordance with the Tank Level 1 controls specified in 22 CCR 66264.1084(c).

1. Tank must have maximum organic vapor pressure, which limit for tank's design capacity category. (66264.1084(b)(1)(A)(2)

Two underground storage tank (UST) and two aboveground tanks (drum washer units) utilized for management of waste solvent at the facility are non-pressurized, and quiescent tanks. Waste tanks at the facility are defined as Level 1 under Subpart CC (design capacities are less than 20,000 gallons, and the wastes managed at the tanks exhibits a vapor pressure of less than 5.2 KPa (11.1 psi)). See Subpart CC Compliance Plan, Appendix V-2.

2. The tank is not to be heated to temperature greater than temperature at which maximum organic vapor pressure of waste is determined for purposes of compliance. (66264.1084(b)(1)(B)

The vapor pressures for the organics stored in the tanks are measured at 68°F. The tank operates at lower temperatures (ambient temperature). See Appendix V-2, Subpart CC Compliance Plan.

3. The content of the tank must not be treated using a waste stabilization process, as defined in 22 CCR 66264.10
(22 CCR 66264.1084(b)(1)(C)

Not applicable. The waste is not treated in the tank.

4. Maximum organic vapor pressure determination: The owner or operator shall determine the maximum organic vapor pressure for a hazardous waste to be managed in the tank using Tank Level 1 controls before the first time the hazardous waste is placed in the tank. The maximum organic vapor pressure shall be determined using the procedures specified in section 66264.1083(c) of this article. Thereafter, the owner or operator shall perform a new determination whenever changes to the hazardous waste managed in the tank could potentially cause the maximum organic vapor pressure to increase to a level that is equal to or greater than the maximum organic vapor pressure limit for the tank design capacity category specified in subsection (b)(1)(A) of this section, as applicable to the tank.
(22 CCR 66264.1084(c)(1)

The Los Angeles Service Center determined the maximum organic vapor pressure for a hazardous waste to be managed in the tank before first placed the waste in the tank (see Appendix V-2). The facility is not planning to change the content of the tank at this time.

5. Owner/operator must equip tanks with fixed roof and closure devices as needed
(22 CCR 264.1084(c)(2), (3)

The waste tanks are designed so that all cover openings can be kept closed with no visible gaps, holes, cracks, or other open spaces into the interior of the tank. The cover and all cover openings operate with no detectable emissions when in a closed position. Cover openings are

maintained in a close position at all times except when adding or removing waste from tanks, or when necessary sampling, or repair/maintenance is performed.

Tank vents are equipped with pressure/vacuum valves. In addition, the waste tanks are designed with a long-bolted manway pressure relief device, which remains in the closed position when not in use to relieve pressure.

The drum washing units at this facility are fixed roof, Level 1 tanks. These tanks are also kept closed except when adding or removing wastes, sampling, or performing routine maintenance that requires the lids to be open.

b. For a tank that manages hazardous waste that meets all of the conditions specified in 66264.1084(b)(1)(A) through (b)(1)(C), the owner or operator shall control air pollutant emissions from the tank in accordance with the Tank Level 2 controls specified in 22 CCR 66264.1084(d).

Not applicable.

c. Inspect the air emission control equipment. (22 CCR 66264.1084(c)(4)

1. The facility performed an initial inspection of the fixed roof and its closure devices on or before the date that the tanks became subject to this section to ensure no gaps, holes, cracks, or other open spaces into the tank. Thereafter, the facility has been performing daily inspections. See example inspection forms in Appendix VIII-I.

2. In the event that a defect is detected, the facility repairs the defect in accordance with the requirements of subsection (k) of this section:
The facility makes the first efforts at repair of the defect no later than 5 calendar days after detection, and repair is completed as soon as possible but no later than 45 calendar days after detection except it is determined that repair of the defect requires emptying or temporary removal from service of the tank and no alternative tank capacity is available at the site to accept the hazardous waste normally managed in the tank. In this case, the repair is scheduled for the next time the process or unit that is generating the hazardous waste managed in the tank stops operation. Repair of the defect would be completed before

the process or unit resumes operation.

d. Maintain a record of the inspection in accordance with the requirements specified in 22 CCR 66264.1089(b). (22 CCR 66264.1084(g)(3)(E)

Inspection records are maintained for 3 years.

e. Standards for tanks equipped with an external floating roof (22 CCR 66264.1084(f)

Not applicable

f. Tanks vented through closed-vent system to a control device (22 CCR 66264.1084(g)(2), (3)

Not applicable

g. Pressure tanks (22 CCR 66264.1084(h)(2), (3)

Not applicable

h. Tanks located inside an enclosure that is vented through a closed-vent to an enclosed combustion control device (22 CCR 66264.1084(i))

Not applicable.

i. Transfer of hazardous waste from a tank to another tank (22 CCR 66264.1084(j)(1)

Not applicable.

Q. Surface Impoundment Standards (22 CCR 66264.1085)

Not applicable

R. Container Standards (22 CCR 66264.1086)

1. For containers having a design capacity greater than 0.1 m3 and less than or equal to 0.46 m3, the owner or operator shall control air pollutant emissions from the container in accordance with the

Container Level 1 standards specified in 66264.1086(c).
(22 CCR 66264.1086(b)(1)(A)

The Los Angeles Service Center manages waste in containers with capacities between 0.1 m3 (26 gallons) and 0.46 m3 (122 gallons). These containers are Level 1 containers, and meet the Level 1 standards as covered containers designed and operated with no gaps, holes, cracks, or other open spaces into the container. In addition, all these containers meet the applicable U.S. Department of Transportation (DOT) regulations on packaging hazardous materials for transportation.

2. **For containers having a design capacity greater than 0.46 m3 (122 gallons) that are not in light material service, the owner or operator shall control air pollutant emissions from the container in accordance with the Container Level 1 standards specified in 66264.1086(c).**
(22 CCR 66264.1086(b)(1)(B)

The Los Angeles Service Center manages waste in containers with capacities greater than 0.46 m3 (122 gallons) that are not in light material service. These containers are Level 1 containers, and meet the Level 1 standards as covered containers designed and operated with no gaps, holes, cracks, or other open spaces into the container. In addition, all these containers meet the applicable DOT regulations on packaging hazardous materials for transportation.

3. **For containers having a design capacity greater than 0.46 m3 (122 gallons) that are in light material service, the owner or operator shall control air pollutant emissions from the container in accordance with the Container Level 2 standards specified in 22 CCR 66264.1086(d)**
(22 CCR 66264.1086(b)(1)(C)

Not applicable.

4. **For containers having a design capacity greater than 0.1 m3 (26 gallons) that are used for stabilization, the owner or operator shall control air pollutant emissions from the container in accordance with the Container Level 3 standards specified in 22 CCR 66264.1086(e)**
(22 CCR 66264.1086(b)(2)

Not applicable.

5. **Identify each container area subject to Article 30 (Subpart CC)**

(22 CCR 66270.27(a)(2))
(40 CFR 270.27(a)(2))

Containers subject to Subpart CC are located in the two container management units and the main warehouse shown on Figure 1-3.

6. Containers must meet DOT regulations on packaging
(22 CCR 66270.27(a)(2), 66264.1086(c)(1)(A), (f))
(40 CFR 270.27(a)(2), 264.1086(c)(1)(i), (f))

All containers in the facility used for managing hazardous waste meet requirements of applicable sections of 49 CFR Part 178 and are managed in accordance with Parts 107, 172, 173, and 180.

7. Containers must be equipped with covers and closure devices, as needed.
(22 CCR 66270.27(a)(2), 66264.1086(c)(1)(B), (2))
(40 CFR 270.27(a)(2), 264.1086(c)(1)(ii), (2))

The containers managing hazardous waste at this facility are equipped with covers such that when the in the closed position there are no visible holes, gaps, or other open spaces into the interior of the container.

In addition, containers are composed of suitable materials as discussed in Section IV.A.

8. Open-Top containers must be equipped with organic-vapor suppressing barrier.
(22 CCR 66270.27(a)(2), 66264.1086(c)(1)(C), (2))
(40 CFR 270.27(a)(2), 264.1086(c)(1)(iii), (2))

Not applicable.

9. Container Level 1. Owner/operator shall install covers and closure devices for the container and secure and maintain each closure device in closed position, except specified.
(22 CCR 66270.14(a), 66270.27, 66264.1086(c)(3), (4))
(40 CFR 270.14(a), 270.27, 264.1086(c)(3), (4))

Containers at the facility are always kept closed except when adding or removing hazardous waste or for maintenance or to avoid unsafe conditions.

10. Container Level 2. Owner/operator shall install covers and closure devices for the container and secure and maintain each closure

device in closed position, except specified.
(22 CCR 66270.14(a), 66270.27, 66264.1086(d)(2), (3))
(40 CFR 270.14(a), 270.27, 264.1086(d)(2), (3))

Not applicable.

11. Container Level 3. Owner/operator shall operate the system in accordance with 52.741, Appendix B; 66264.1087; and 66265.1081, as needed.
(22 CCR 66270.14(a), 66270.27, 66264.1086(e)(3), (4) & (5))
(40 CFR 270.14(a), 270.27, 264.1086(e)(3), (4) & (5))

Not applicable.

12. Standards apply to each closed vent system and control devise used to control air emissions under Chapter 14, Article 30.
(22 CCR 66270.14(a), 66270.27, 66264.1087(a))
(40 CFR 270.14(a), 270.27, 264.1087(a))

Not applicable.

S. Inspection and Monitoring Requirements:
Each tank, surface impoundment, and container shall be inspected, monitored, and repaired in accordance with the Chapter 14, Article 30 requirements.
(22 CCR 66270.27, 66264.1088)
(40 CFR 270.27, 264.1088)

Subpart CC plan is prepared for this facility to perform inspections, monitoring, and repairs specific to each unit in accordance with 66264.1084 through 66264.1087 (see Appendix V-2).

T. Recordkeeping Requirements:
Each owner/operator shall comply with the recordkeeping requirements specified at 66264.1089.
(22 CCR 66270.27, 66264.1089)
(40 CFR 270.27, 264.1089)

Records are kept as part of the facility operating records for a minimum of 3 years.

U. Reporting Requirements:
(22 CCR 66270.27, 66264.1090)
(40 CFR 270.27, 264.1090)

1. **Each owner or operator managing hazardous waste in a tank, surface impoundment, or container exempted from using air emission controls under the provisions of section 66264.1082(c) shall report to the Department each occurrence when hazardous waste is placed in the waste management unit in noncompliance with the conditions specified in section 66264.1082 (c)(1) or (c)(2), as applicable.**
(22 CCR 66270.27, 66264.1090(a))
(40 CFR 270.27, 264.1090(a))

   Not applicable. The facility does not manage wastes in tanks or containers exempted from air emission control requirements. The facility does not manage hazardous wastes in surface impoundments.

2. **Each owner or operator using air emission controls on a tank in accordance with 66264.1084(c) shall report to the Department each noncompliance identified under 66264.1084(b).**
(22 CCR 66270.27, 66264.1090(b))
(40 CFR 270.27, 264.1090(b))

   The facility will report to the Department any noncompliance with tank Level 1 controls such as changes to the hazardous waste managed in the tank that could potentially cause the maximum organic vapor pressure to increase to a level that is equal to or greater than the maximum organic vapor pressure limit for the tank design capacity. Such possible non-compliance written report will be submitted to the Department within 15 calendar days of the time that the owner or operator becomes aware of the occurrence. The written report will contain the EPA identification number, facility name and address, a description of the noncompliance event and the cause, the dates of the noncompliance, and the actions taken to correct the noncompliance and prevent recurrence of the noncompliance. The report will be signed and dated by an authorized representative of the owner or operator.

3. **Each owner or operator using a control device in accordance with 66264.1087 shall submit semiannual written report to DTSC, except as specified.**
(22 CCR 66270.27, 66264.1090(c), (d))
(40 CFR 270.27, 264.1090(c), (d))

   Not applicable. The facility does not use any closed-vent system or control device to control air emissions.

V. Emission Monitoring Requirements:

1. **Each owner/operator shall provide an emission monitoring plan for both Method 21 in 40 CFR Part 60, Appendix A and control device monitoring methods. This plan shall include the following information: monitoring point(s), monitoring methods for control devices, monitoring frequency, procedures for documenting exceedances, and procedures for mitigating non-compliances.**
(22 CCR 66270.27(a)(6)
(40 CFR 270.27(a)(6)

   Not applicable. Emissions from the waste underground storage tank in heavy liquid service are not sufficient to require control devices.

2. **Article 30 Implementation Plan: When an owner or operator of a facility subject to chapter 15, article 28.5 cannot comply with chapter 14, article 28.5 by the date of issuance, the schedule of implementation required under section 66265.1082.**
(22 CCR 66270(a)(7)
(40 CFR 270(a)(7)

   Not applicable. Interim status requirements do not apply to permitted facilities.

W. Information on the potential for the public to be exposed to releases. After August 8, 1985, any Part B application submitted by an owner or operator of a facility that transfers, stores, treats, or dispose of hazardous waste in a surface impoundment or a landfill shall be accompanied by information, reasonably ascertainable by the owner or operator, on the potential for the public to be exposed to hazardous wastes or hazardous constituents through releases related to the unit.
(22 CCR 66270.10(j))
(40 CFR 270.10(j))

Not applicable.

APPENDIX V-2

SUBPART CC COMPLIANCE PLAN

LOS ANGELES SERVICE CENTER
CAT000613935

2918 Worthen Avenue
Los Angeles, CA 90039

The Safety-Kleen Los Angeles Service Center must control air pollutant emissions from waste management units at this facility pursuant to the requirements of RCRA Subpart CC through implementation of this compliance plan.

The following describes this facility's waste determination procedures, tank and container design/management practices, organic emission controls, inspection, monitoring, recordkeeping, and reporting requirements/standards promulgated under RCRA Subpart CC.

Waste Determination Procedures

For purposes of waste determination, this facility utilizes knowledge developed in the waste characteristics portion of the Operation Plan/Permit. For those hazardous wastes that are managed on a transfer basis, the Subpart CC regulations do not apply. However, the owner/operator may use knowledge of the waste based on information included in shipping papers, waste certification notices confirming waste determination from generators of the waste, or the ultimate receiving facility.

Based on this knowledge, it has been determined that all wastes managed in tanks or containers at this facility may display an average volatile organic concentrations of greater than 500 parts per million by weight (ppmw) at the point of waste origination. Therefore, all hazardous wastes managed in tanks or containers at this facility must be managed in accordance with the applicable Subpart CC Standards.

Point of Waste Origination

The point of waste origination for all wastes generated off site and transported to the Los Angeles Service Center, which are subsequently managed in tanks or containers at the facility, is effectively the site boundary at the entrance gate.

For those hazardous wastes generated on site, the point of waste origination is the point of waste generation.

Tanks

Tanks that manage organic wastes at this facility are described in detail in the Operation Plan/Permit. Certain features of these units, as they relate to the Subpart CC standards, are described below.

Two underground storage tank (UST) and two aboveground tanks (drum washer units) utilized for management of waste solvent (petroleum- or aqueous-based) at the facility are non-pressurized, and quiescent tanks. Waste tanks at the facility are defined as Level 1 under Subpart CC (design capacities are less than 20,000 gallons, and the wastes managed at the tanks exhibits a vapor pressure of less than 5.2 KPa (11.1 psi)). The actual vapor pressure of waste mineral spirits managed in tanks is about 0.2 psi. The maximum organic pressure is determined using knowledge of the waste pursuant to 22 CCR 66265.1084(c)(4). Documentation for the basis of this determination is found in the waste characteristics portion of the Operation Plan/Permit.

The waste tank is designed so that all cover openings can be kept closed with no visible gaps, holes, cracks, or other open spaces into the interior of the tank. The cover and all cover openings operate with no detectable emissions when in a closed position. Cover openings are maintained in a close position at all times except when adding or removing waste from tanks, or when necessary sampling, or repair/maintenance is performed.

Tank vents are equipped with pressure/vacuum valves. In addition, the waste tank is designed with a long-bolted manway pressure relief device, which remains in the closed position when not in use to relieve pressure.

The drum washing units at this facility are fixed roof, Level 1 tanks. These tanks are kept closed except when adding or removing wastes, sampling, or performing routine maintenance that requires the lids to be open.

Containers

Containers, which manage organic wastes at this facility are described in detail in the Operation Plan/Permit. Certain features of these units, as they relate to the Subpart CC standards, are described below.
Containers managing hazardous waste at the Los Angeles Service Center generally fall into three categories:

1. Containers less than 26 gallons in capacity, which are exempt from Subpart CC requirements, and containers with capacities between 26 and 122 gallons that are in the course of transportation that are also exempt from Subpart CC requirements;
2. Containers with capacities between 26 and 122 gallons that are all Level 1 containers, and generally meet the Level 1 standards as covered containers designed and operated with no gaps, holes, cracks, or other open spaces into the container;
3. Containers of greater than 122 gallons that manage hazardous wastes at this facility are not in light material service and are Level 1 covered containers designed and operated

with no gaps, holes, cracks, or other open spaces into the container.

In addition, all Safety-Kleen containers used to manage waste meet applicable U.S. DOT regulations on packaging hazardous materials for transportation.

Inspection and Monitoring

Hazardous wastes received from off-site generators are already containerized when the facility accepts them. A container inspection occurs within 24 hours of the waste's arrival at the facility. Containers are visually inspected and Inspection is documented in the facility inspection records. An End-of-Weel Container Inspection is completed on the last day of the service week when the facility inspection may not be conducted within 24 hours. This written plan and schedule to perform the inspections is incorporated in the facility inspection plan by this reference.

An initial visual tank inspection was conducted on 12/14/93. No defects were noted on underground storage tank, and the two Return & Fill tanks (drum washer units), which could result in air pollutant emissions.

Tank inspections have been conducted on an annual basis to ensure compliance with Subpart CC standards.

Recordkeeping

Documentation of tank and tank cover design: See Operation Plan/Permit.
Documentation of waste determination: See Wastes Characteristics portion of Operation Plan/Permit.

Records of visual inspections: See daily facility inspection records.

Results of the determination of the maximum vapor pressure of waste in tanks and record of the tank dimensions and design capacity: See Operation Plan/Permit.

PART VI

ENVIRONMENTAL MONITORING AND RESPONSE PROGRAMS

VI. ENVIRONMENTAL MONITORING AND RESPONSE PROGRAMS

A. Groundwater Monitoring

1. Demonstration of exemption from groundwater protection requirements for covered waste piles meeting the requirements of 66264.250(c)
(22 CCR 66264.250(c), 66270.14(c))
(40 CFR 265.250(c), 270.14(c))

Not applicable. No waste piles at the facility.

2. Interim status groundwater monitoring data:
(22 CCR 66265.90 - 66265.99, 66270.14(c)(1))
(40 CFR 264.90 - 265.94, 270.14(c)(1))

Not applicable. There are no interim status units at the Los Angeles Facility.

a. Description and location of wells

b. Description of sampling/analysis procedures

c. Monitoring data

d. Statistical procedures

e. Groundwater assessment plan

3. General hydrogeologic information
(22 CCR 66270.14(c)(2))
(40 CFR 270.14(c)(2)

See Section II.

4. Topographic map information
(22 CCR 66270.14(c)(2), (c)(3), (c)(4)(A))
(40 CFR 270.14(c)(2), (c)(3), (c)(4)(i))

See Section II.

5. Contaminant or pollutant plume description
(22 CCR 66270.14(c)(4))
(40 CFR 270.14(c)(4))

Not applicable. No contamination or pollutant plume.

6. Engineering report describing general monitoring program:
(22 CCR 66264.97, 66270.14(c)(5))
(40 CFR 264.97, 270.14(c)(5))

Not applicable. Groundwater monitoring- not applicable.

a. Description and location of wells

b. Description of sampling/analysis procedures, including:

1. Well evacuation

2. Sample collection

3. Sample preservation

4. Sample shipment

5. Sample preparation

6. Analysis

7. QA/QC

8. Chain-of-custody

9. Data evaluation

10. Data recording and reporting

11. Frequency

c. Procedures and justification for establishing background quality for each constituent of concern and monitoring parameter

d. Statistical procedures

1. Parametric analysis of variance (ANOVA)

2. Non-parametric ANOVA (based on ranks)

3. Tolerance or prediction interval procedure

4. Control chart approach

5. Alternative approach

e. Procedures for determining groundwater surface elevation and field parameters

f. Graphing procedures

g. Quarterly hydrogeologic measurements

h. Recordkeeping of groundwater sampling and analysis data

7. Detection monitoring program description:
(22 CCR 66264.91(a)(1), 66264.97, 66264.98, 66270.14(c)(6))
(40 CFR 264.91(a)(4), 264.97, 264.98, 170.14(c)(6))

Not applicable. Facility is not subject to this subpart.

a. Monitoring parameter and constituents of concern

b. Groundwater monitoring system

c. Background groundwater concentration values for each proposed monitoring parameter and constituent of concern, or procedure to calculate background values

d. Proposed sampling, analysis, and statistical comparison procedures

e. Procedures to be followed if a statistically significant increase in any constituent or parameter is identified at any compliance point monitoring well

8. Evaluation monitoring program description
(22 CCR 66264.94, 66264.97, 66264.98, 66264.99, 66270.14(c)(7))
(40 CFR 264.94, 264.95, 264.97, 264.98, 264.99, 270.14(c)(7))

Not applicable. Facility is not subject to this subpart.

a. Description of wastes currently and previously managed

b. Characterization of contaminated/polluted groundwater

c. Monitoring parameters to be monitored in evaluation monitoring program

d. Background values

e. Proposed concentration limits > background (for corrective

action program):

1. Adverse effects on groundwater quality

2. Adverse effects on surface water and soil-pore liquid quality

3. Other potential adverse effects on human health or the environment 4. Lowest technologically and economically achievable concentration

5. MCLs and other statutory/regulatory limits

6. Aggregate effect on sensitive biological receptors

f. Engineering report describing groundwater monitoring system

g. Proposed sampling, analysis, and statistical comparison procedures for groundwater data

9. Corrective action program description:
(22 CCR 66264.94, 66264.97, 66264.98, 66264.99, 66264.100, 66270.14(c)(8))
(40 CFR 264.94, 264.97, 264.98, 264.99, 264.100, 270.14(c)(8))

Not applicable.

a. Characterization of contaminated/polluted groundwater

b. Proposed constituents of concern for groundwater

c. Proposed concentration limits

d. For each concentration limit > background:

1. Adverse effects on groundwater quality

2. Adverse effects on surface water and soil-pore liquid quality

3. Other potential adverse effects on human health or the environment

4. Lowest technologically and economically achievable concentration

5. **MCLs and other statutory/regulatory limits –**

6. **Aggregate effect on sensitive biological receptors**

e. **Corrective action plan**

1. **Location**

2. **Construction detail**

3. **Plans for removing wastes**

4. **Treatment technologies**

5. **Effectiveness of correction program**

6. **Reinjection system**

7. **Additional hydrogeologic data**

8. **Operation and maintenance**

9. **Closure and post-closure plans**

f. **Groundwater monitoring program**

1. **Description of monitoring system**

2. **Description of sampling and analysis procedures**

3. **Monitoring data and statistical analysis procedures**

4. **Reporting requirements**

5. **Description of how monitoring program will be used to demonstrate adequacy of corrective action**

g. **Proposed permit compliance schedule for submitting items e. and f. above (if Department has approved delayed submittal)**

B. Surface Water Monitoring

1. **Demonstration of exemption from surface water protection requirements for covered waste piles meeting the requirements of 66264.250(c)**
(22 CCR 66264.250(c), 66270.14(c))

Not applicable. There are no covered waste piles at this facility.

2. Interim status surface water monitoring data:
(22 CCR 66265.90 - 66265.99, 66270.14(c)(1))

Not applicable. There is a leak detection system within double contained tanks.

a. Description and location of monitoring points

b. Description of sampling/analysis procedures

c. Monitoring data

d. Statistical procedures

e. Surface water assessment plan

3. Topographic map information
(22 CCR 66270.14(c)(3), (c)(4)(A))

See Section I.

4. Contaminant or pollutant plume description
(22 CCR 66270.14(c)(4))

Not applicable. No contaminant or pollutant plume at this facility.

5. Engineering report describing general monitoring program:
(22 CCR 66264.97, 66270.14(c)(5))

Not applicable. Monitoring program not required.

a. Description and location of monitoring points

b. Description of sampling/analysis procedures, including:

1. Sample collection

2. Sample preservation

3. Sample shipment

4. Sample preparation

5. Analysis

6. **QA/QC**

7. **Chain-of-custody**

8. **Data evaluation**

9. **Data recording and reporting**

10. **Frequency**

c. **Procedures and justification for establishing background quality for each constituent of concern and monitoring parameter**

d. **Statistical procedures**

1. **Parametric analysis of variance (ANOVA)**

2. **Non-parametric ANOVA (based on ranks)**

3. **Tolerance or prediction interval procedure**

4. **Control chart approach**

5. **Alternative approach**

e. **Graphing procedures**

f. **Recordkeeping of surface water sampling and analysis data**

6. **Detection monitoring program description: (22 CCR 66264.97, 66264.98, 66270.14(c)(6))**

Not applicable.

a. **Monitoring parameters and constituents of concern**

b. **Surface water monitoring system**

c. **Background surface water concentration values for each proposed monitoring parameter and constituent of concern, or procedure to calculate background values**

d. **Proposed sampling, analysis, and statistical comparison procedures**

e. Procedures to be followed if a statistically significant increase in any constituent or parameter is identified at any compliance point monitoring location

7. Evaluation monitoring program description:
(22 CCR 66264.97, 66264.97, 66264.98, 66264.99, 66270.14(c)(7))

Not applicable.

a. Description of wastes currently and previously managed

b. Characterization of contaminated/polluted surface water

c. Monitoring parameters to be monitored in evaluation monitoring program

d. Background values

e. Proposed concentration limits > background (for corrective action program):

1. Adverse effects on surface water quality

2. Adverse effects on groundwater and soil-pore liquid quality

3. Other potential adverse effects on human health or the environment

4. Lowest technologically and economically achievable concentration

5. MCLs and other statutory/regulatory limits

6. Aggregate effect on sensitive biological receptors

f. Engineering report describing surface water monitoring system

g. Proposed sampling, analysis, and statistical comparison procedures for surface water data

8. Corrective action program description:
(22 CCR 66264.94, 66264.97, 66264.98, 66264.99, 66264.100, 66270.14(c)(8))

Not applicable

a. **Characterization of contaminated/polluted surface water**

b. **Proposed constituents of concern for surface water**

c. **Proposed concentration limits**

d. **For each concentration limit > background:**

   1. **Adverse effects on surface water quality**

   2. **Adverse effects on groundwater and soil-pore liquid quality**

   3. **Other potential adverse effects on human health or the environment**

   4. **Lowest technologically and economically achievable concentration**

   5. **MCLs and other statutory/regulatory limits**

   6. **Aggregate effect on sensitive biological receptors**

e. **Corrective action plan**

   1. **Location**

   2. **Construction detail**

   3. **Plans for removing wastes**

   4. **Treatment technologies**

   5. **Effectiveness of correction program**

   6. **Additional environmental data**

   7. **Operation and maintenance**

   8. **Closure and post-closure plans**

f. **Surface water monitoring program**

   1. **Description of monitoring system**

   2. **Description of sampling and analysis procedures**

3. Monitoring data and statistical analysis procedures

4. Reporting requirements

5. Description of how monitoring program will be used to demonstrate adequacy of corrective action

g. Proposed permit compliance schedule for submitting items e. and f. above (if Department has approved delayed submittal)

C. Soil-Pore Liquid Monitoring

Not applicable. The facility is not subject to this subpart.

1. Demonstration of exemption from soil-pore liquid protection requirements;
(22 CCR 66270.14(c))

a. Covered waste piles meeting the requirements of 66264.250(c)
(22 CCR 666264.150(c))

b. Exemption under 66264.97(d)(5)
(22 CCR 66264.97(d)(5))

2. Interim status soil-pore liquid monitoring data
(22 CCR 66265.90 - 66265.99, 66270.14(c)(1))

a. Description and location of monitoring points

b. Description of sampling/analysis procedures

c. Monitoring data

d. Statistical procedures

e. Soil-pore liquid assessment plan

3. Topographic map information
(22 CCR 66270.14(c)(3), (c)(4)(A))

4. Contaminant or pollutant plume description
(22 CCR 66270.14(c)(4))

5. Engineering report describing general monitoring program:
(22 CCR 66264.97, 66270.14(c)(5))

a. Description and location of monitoring points

b. Description of sampling/analysis procedures, including:

b. 1. Sample collection

2. Sample preservation

3. Sample shipment

4. Sample preparation

5. Analysis

6. QA/QC

7. Chain-of-custody

8. Data evaluation

9. Data recording and reporting

10. Frequency

c. Procedures and justification for establishing background quality for each constituent of concern and monitoring parameter

d. Statistical procedures

1. Parametric analysis of variance (ANOVA)

2. Non-parametric ANOVA (based on ranks)

3. Tolerance or prediction interval procedure

4. Control chart approach

5. Alternative approach

e. Graphing procedures

f. Recordkeeping of soil-pore liquid sampling and analysis data

6. Detection monitoring program description:
(22 CCR 66264.97, 66264.98, 66270.14(c)(6))

a. **Monitoring parameters and constituents of concern**

b. **Soil-pore liquid monitoring system**

c. **Background soil-pore liquid concentration values for each proposed monitoring parameter and constituent of concern, or procedure to calculate background values**

d. **Proposed sampling, analysis, and statistical comparison procedures**

e. **Procedures to be followed if a statistically significant increase in any constituent or parameter is identified at any compliance point monitoring location**

7. **Evaluation monitoring program description:**
(22 CCR 66264.94, 66264.97, 66264.98, 66264.99, 66270.14(c)(7))

a. **Description of wastes currently and previously managed**

b. **Characterization of contaminated/polluted soil-pore liquid**

c. **Monitoring parameters to be monitored in evaluation monitoring program**

d. **Background values**

e. **Proposed concentration limits > background (for corrective action program):**

1. **Adverse effects on soil-pore liquid quality**

2. **Adverse effects on groundwater and surface water quality**

3. **Other potential adverse effects on human health or the environment**

4. **Lowest technologically and economically achievable concentration**

5. **MCLs and other statutory/regulatory limits**

6. **Aggregate effects on sensitive biological receptors**

f. **Engineering report describing soil-pore liquid monitoring system**

g. Proposed sampling, analysis, and statistical comparison procedures for soil-pore liquid data

8. Corrective action program description: (22 CCR 66264.94, 66264.97, 66264.98, 66264.99, 66264.100, 66270.14(c)(8))

a. Characterization of contaminated/polluted soil-pore liquid

b. Proposed constituents of concern for soil-pore liquid

c. Proposed concentration limits

d. For each concentration limit > background:

1. Adverse effects on soil-pore liquid quality

2. Adverse effects on groundwater and surface water quality

3. Other potential adverse effects on human health or the environment

4. Lowest technologically and economically achievable concentration

5. MCLs and other statutory/regulatory limits

6. Aggregate effect on sensitive biological receptors

e. Corrective action plan

1. Location

2. Construction detail

3. Plans for removing wastes

4. Treatment technologies

5. Effectiveness of correction program

6. Reinjection system

7. Additional environmental data

8. Operation and maintenance

9. Closure and post-closure plans

f. Soil-pore liquid monitoring program

1. Description of monitoring system

2. Description of sampling and analysis procedures

3. Monitoring data and statistical analysis procedures

4. Reporting requirements

5. Description of how monitoring program will be used to demonstrate adequacy of corrective action

g. Proposed permit compliance schedule for submitting items e. and f. above (if Department has approved delayed submittal)

D. Air Monitoring

Not applicable. Facility not subject to this subpart.

1. Demonstration of exemption from air protection requirements: (22 CCR 66270.14(c))

a. No migration (22 CCR 66264.700(c))

b. No hazardous wastes received after 2/2/85 (22 CCR 66264.700(a))

2. Interim status air monitoring data: (22 CCR 66265.710 - 66265.714, 66270.14(c)(1))

a. Description and location of monitoring points

b. Description of sampling/analysis procedures

c. Monitoring data

d. Statistical procedures

e. Air assessment plan

3. Topographic map information

(22 CCR 66270.14(c)(3), (c)(4)(A))

4. **Contaminant or pollutant plume description (22 CCR 66270.14(c)(4))**

5. **Engineering report describing general monitoring program: (22 CCR 66264.706, 66264.707, 66264.708, 66270.14(c)(5))**

    a. **Description and location of monitoring points**

    b. **Description of sampling/analysis procedures, including:**

        1. **Sample collection**

        2. **Sample preservation**

        3. **Sample shipment**

        4. **Sample preparation**

        5. **Analysis**

        6. **QA/QC**

        7. **Chain-of-custody**

        8. **Data evaluation**

        9. **Data recording and reporting**

        10. **Frequency**

    c. **Procedures and justification for establishing background quality for each hazardous constituent and monitoring parameter**

    d. **Statistical procedures**

    e. **Recordkeeping of air sampling and analysis data**

6. **Detection monitoring program description: (22 CCR 66264.706, 66270.14(c)(6))**

    a. **Monitoring parameters and hazardous constituents**

    b. **Air monitoring system**

c. Background air concentration values for each proposed monitoring parameter and hazardous constituent, or procedure to calculate background values

d. Proposed sampling, analysis and statistical comparison procedures

e. Procedures to be followed if a statistically significant increase in any constituent or parameter is identified at any compliance point monitoring location

7. Compliance monitoring program description:
(22 CCR 66264.704, 66464.707, 66270.14(c)(7))

a. Description of wastes currently and previously managed

b. Characterization of contaminated/polluted air

c. Hazardous constituents and monitoring parameters to be monitored in compliance monitoring program

d. Background values

e. Alternate concentration limits:

1. Adverse effects on air quality

2. Other potential adverse effects on human health or the environment

f. Applicable California ARB air quality standards

g. Engineering report describing air monitoring system

h. Proposed sampling, analysis and statistical comparison procedures for air data

i. Procedures to be followed if air protection standard is exceeded at compliance point monitoring location

8. Corrective action program description:
(22 CCR 66264.704, 66264.708, 66270.14(c)(8))

a. Characterization of contaminated/polluted air

b. Proposed hazardous constituents for air

c. **Proposed concentration limits**

d. **Alternate concentration limits:**

1. **Adverse effects on air quality**

2. **Other potential adverse effects on human health or the environment**

3. **Applicable California ARB air quality standards**

e. **Corrective action plan**

1. **Location**

2. **Construction detail**

3. **Plans for removing wastes**

4. **Treatment technologies**

5. **Effectiveness of correction program**

6. **Additional environmental data**

7. **Operation and maintenance**

8. **Closure and post-closure plans**

f. **Air monitoring program**

1. **Description of monitoring system**

2. **Description of sampling and analysis procedures**

3. **Monitoring data and statistical analysis procedures**

4. **Reporting requirements**

5. **Description of how monitoring program will be used to demonstrate adequacy of corrective action**

g. **Proposed permit compliance schedule for submitting items e. and f. above (if Department has approved delayed submittal)**

E. Soil-pore Gas and Soil Monitoring

Not applicable. Facility is not subject to this subpart.

1. Demonstration of exemption from soil-pore gas and soil protection requirements (22 CCR 66270.14(c))

a. No migration (22 CCR 66264.700(c))

b. No hazardous wastes received after 2/2/85 (22 CCR 66264.700(c))

2. Interim status soil-pore gas and soil monitoring data: (22 CCR 66265.710 - 66265.714, 66270.14(c)(1))

a. Description and location of monitoring points

b. Description of sampling/analysis procedures

c. Monitoring data

d. Statistical procedures

e. Soil-pore gas and soil assessment plan

3. Topographic map information (22 CCR 66270.14(c)(3), (c)(4)(A))

4. Contaminant or pollutant plume description (22 CCR 66270.14(c)(4))

5. Engineering report describing general monitoring program: (22 CCR 66264.706, 66264.707, 66264.708, 66270.14(c)(5))

a. Description and location of monitoring points

b. Description of sampling/analysis procedures, including

1. Sample collection

2. Sample preservation

3. Sample shipment

4. Sample preparation

5. Analysis

6. **QA/QC**

7. **Chain-of-custody**

8. **Data evaluation**

9. **Data recording and reporting**

10. **Frequency**

c. **Procedures and justification for establishing background quality for each hazardous constituent and monitoring parameter**

d. **Statistical procedures**

e. **Recordkeeping of soil-pore gas and soil sampling and analysis data**

6. **Detection monitoring program description: (22 CCR 6264.706, 66270.14(c)(6))**

a. **Monitoring parameters and hazardous constituents**

b. **Soil-pore gas and soil monitoring system**

c. **Background soil-pore gas and soil concentration values for each proposed monitoring parameter and hazardous constituent, or procedure to calculate background values**

d. **Proposed sampling, analysis, and statistical comparison procedure**

e. **Procedures to be followed if a statistically significant increase in any constituent or parameter is identified at any compliance point monitoring location**

7. **Compliance monitoring program description: (22 CCR 66264.704, 66264.707, 66270.14(c)(7))**

a. **Description of wastes currently and previously managed**

b. **Characterization of contaminated/polluted soil-pore gas and soil**

c. **Hazardous constituents and monitoring parameters to be**

monitored in compliance monitoring program

d. Background values

e. Alternate concentration limits:

1. Adverse effects on soil-pore gas and soil quality

2. Other potential adverse effects on human health or the environment

f. Engineering report describing soil-pore gas and soil monitoring system

g. Proposed sampling, analysis, and statistical comparison procedures for soil-pore gas and soil data

h. Procedures to be followed if soil-pore gas or soil protection standard is exceeded at compliance point monitoring location

8. Corrective action program description:
(22 CCR 66264.704, 66264.708, 66270.14(c)(8))

a. Characterization of contaminated/polluted soil-pore gas or soil

b. Proposed hazardous constituents for soil-pore gas and soil

c. Proposed concentration limits

d. Alternate concentration limits:

1. Adverse effects on soil-pore gas and soil quality

2. Other potential adverse effects on human health or the environment

e. Corrective action plan

1. Location

2. Construction detail

3. Plans for removing wastes

4. Treatment technologies

5. **Effectiveness of correction program**

6. **Reinjection system**

7. **Additional environmental data**

8. **Operation and maintenance**

9. **Closure and post-closure plans**

f. **Soil-pore gas and soil monitoring program**

1. **Description of monitoring system**

2. **Description of sampling and analysis procedures**

3. **Monitoring data and statistical analysis procedures**

4. **Reporting requirements**

5. **Description of how monitoring program will be used to demonstrate adequacy of corrective action**

g. **Proposed permit compliance schedule for submitting items e. and f. above (if Department has approved delayed submittal)**

PART VII

SECURITY

VII. SECURITY

Describe the security measures used at the facility including:
(Items A and D; <u>or</u> B, C, and D)

A. Access control measures such as a 24-hour surveillance system which continuously monitors and controls entry onto active portions of the facility (22 CCR 66264.14(a) and (b)(1), 66270.14(b)(4)) (40 CFR 264.14(a) and (b)(1), 270.14(b)(4))

A combination of access control measures including fence, lockable gates and doors, and signs prevent unknowing entry and minimize the potential for unauthorized entry of people or livestock into the facility. The facility has been designed with a 24-hour outdoor lighting system for both safety and security. The hazardous waste management area is secured by a 6-foot-tall chain-link fence topped by three strands of barbed wire. Access to the hazardous waste management area is controlled by a gate, which is locked at all times when an employee is not present at the gate. Drivers unlock the gate to enter, and immediately re-lock the gate once the truck is moved into the hazardous waste management area. The gate can remain unlocked if it is attended by an employee, or if an employee is working in the immediate vicinity of the gate, so that the gate is always under his/her direction observation.

Access to the tanks is controlled, as the tank fill pipes are kept closed and locked except when waste is being removed. When waste is being removed, the unloading operation is monitored.

B. Other access control measures such as: (22 CCR 66264.14(a) and (b)(2), 66270.14(b)(4)) (40 CFR 264.14(a) and (b)(2), 270.14(b)(4))

1. Gates kept locked when facility is unattended

All doors to the building(s) are locked when the facility is not in operation. During operating hours, doors that must remain unlocked are under the direction observation of Safety-Kleen employees. Entrances to hazardous waste management areas that are not controlled by a locked gate are controlled by a locked door, as described above.

2. Attendant stationed at gate – There is no attendant at the gate. The gate is locked at all times.

3. Other - No unauthorized entry is anticipated since the facility is small, employees are few and are familiar with each other, and all accesses are controlled by Safety-Kleen employees or locks.

If unauthorized persons enter the secured area during facility operation,

the Safety-Kleen employee-in-charge detains the person for questioning. If it appears that no malice was intended by the entry, the person will be released with an explanation that no unauthorized entry is permitted. If it appears that malice was intended, the appropriate authorities will be summoned.

All visitors are reminded of sign-in procedures at the front of the entrance.

C. Barriers, completely surrounding active portions, capable of preventing unauthorized entry of persons or animals - indicate:
(22 CCR 66264.14(a) and (b)(2), 66270.14(b)(4))
(40 CFR 264.14(a) and (b)(2), 270.14(b)(4))

1. **Manproof fencing -** The hazardous waste management area is secured by a 6-foot, chain-link fence topped by three strands of barbed wire.

2. **Natural barriers -** Not applicable. No natural barriers exist at the facility.

3. **Other types of barriers -** Access to tanks and buildings are locked.

4. **Locations of all barriers -** Locations of fences shown on Figure 1-3.

D. Warning signs which must be:
(22 CCR 66264.14(c), 66270.14(b)(4))
(40 CFR 264.14(c), 270.14(b)(4))

1. **Posted on the perimeter fence at locations where trespassers might enter indicating that the facility, or the hazardous waste area of the facility, contains hazardous waste**

   Warning signs are posted on access points to hazardous waste handling areas of facility and every 50 feet along each side of the fence.

2. **Posted at all entrances and on access roads to hazardous waste areas of the facilities open to the public.**

   Warning signs are posted on access points to hazardous waste handling areas of facility and every 50 feet along each side of the fence.

3. **Posted at the boundary of areas where hazardous waste is managed**

   Warning signs are posted on access points to hazardous waste handling areas of facility and every 50 feet along each side of the fence.

4. **Legible from a distance of 25 feet and indicate the following characteristics of signs:**

a. **Locations -** The sign locations are at the truck entrance and along each side of the perimeter fence.

b. **Sizes -** The signs have a letter-size and style of a minimum size of 1-inch block.

c. **Wording (in English, "Caution -- Hazardous Waste Area -- Unauthorized Persons Keep Out," and Spanish, "Cuidado! Zona De Residuos Paligrosos. Prohibida La Entrada A Personas No Autorizadas.")**

The signs are worded as specified above.

E. Waiver of security requirements
(22 CCR 66264.14(a)(l) and (2), 66270.14(b)(4))
(40 CFR 264.14(a)(1) and (2), 270l.14(b)(4))

There is no waiver of security requested. The facility is fenced, tanks are locked, and the building is capable of being locked.

Demonstrate both of the following

1. Contact with waste, structures, and equipment will not injure unknowing or unauthorized persons or livestock who may enter facility

Not applicable. There is no waiver of security requested. The facility is fenced, tanks are locked, and the building is capable of being locked.

2. Disturbance of waste or equipment by unknowing or unauthorized persons or livestock will not cause a violation of 22 CCR, Division 4.5, Chapter 14

Not applicable. There is no waiver of security requested. The facility is fenced, tanks are locked, and the building is capable of being locked.

PART VIII

MANAGEMENT PRACTICES

PART VIII

MANAGEMENT PRACTICES

VIII. MANAGEMENT PRACTICES

A. Identify waste handling equipment including associated safety features (22 CCR 66270.14(b)(8)) (40 CFR 270.14(b)(8))

1. Examples of equipment to include are:

a. Dozers - None

b. Scrapers - None

c. Trucks - There are approximately 15 to 20 trucks at the facility.

d. Forklifts - The facility has one to four forklifts. Each forklift has the following safety features:

- Backup alarm system
- Lights
- Seat belt
- Fire extinguisher
- Roll cage
- Front reinforced cage to protect operator
- Spark arrester

e. Pumps - The Return and Fill (R&F) station for spent parts washer solvent has two drum washer units that each has a pump for recirculating waste solvent in order to clean out the containers. Drum washer units are located in dumpsters, which are hooked up to two pumps to move used solvent to the storage tank. Pumps are "hard plumbed," not portable units. Information on the pumps is given in Section IV.

f. Pipelines - The pipelines at the facility are illustrated in the tank design drawings (Figure 4-2).

g. Other - A hand truck, pallet jack, or forklift is used to move containers between the truck and the container storage area. The hand truck is rubber-tired with no sharp or protruding points that may puncture or damage containers.

2. Examples of safety features to include are:

a. Safety windshields - None

b. **Spark arresters -** Trucks are electrically grounded before they are loaded or unloaded since the dock where the drums are placed is grounded. Thus, the equipment (lift, hoist, or dock plate) that comes into contact with the dock is grounded. Wet vacuums also have spark arresters.

c. **Rollover protection devices -** Forklifts have roll cages.

d. **Fresh air supply -** The container storage area is located in the warehouse. All containers in the container storage area are kept closed except when sampling or transferring contents to the underground storage. During normal operating conditions, respirators are not required in the container storage area. The building is equipped with a ventilation system that supplies fresh air.

e. **Monitoring equipment, area or personnel -** Safety-Kleen maintains the following monitoring equipment for the underground storage tanks (USTs).

Tank leak detectors (see Part B.5.b)
High-level detection alarms (see Part B.5.b)

Safety and emergency equipment is maintained in the warehouse adjacent to both container storage areas.

In addition to the above monitoring equipment, the facility maintains personal protective equipment and emergency response equipment, as described in Section X.B. The facility manager or supervisor (or designee) is responsible for carrying out and documenting the facility inspection including checking the monitoring and safety equipment.

f. **Lighting -** The facility has been designed with a 24-hour outdoor lighting system for both safety and security. Safety-Kleen has installed emergency lighting. In the event of a power outage, or failure of lighting, ventilation, communication, processing equipment, or handling equipment, Safety-Kleen will immediately cease all hazardous waste handling activities and secure the facility. Thus, the effects of power outage and/or equipment failure will be mitigated.

g. **Other -** Full- and half-face organic vapor cartridge respirators are available for use.

B. Identify equipment to be used for safety unloading and handling containers of hazardous waste from vehicles
(22 CCR 66270.14(b)(8)(A))
(40 CFR 270.14(b)(8)(i))

1. Examples of types of equipment to include are:

a. Lifts - Each route truck is equipped with a lift to raise or lower containers. The lifts have approximately 3000-pound capacity (average container weight is 144 pounds). In addition, the facility is equipped with pallet jacks and forklifts. The equipment is used to transport all drums from trucks, to the designated container storage areas in the warehouse. Adequate aisle space is maintained in the hazardous waste container storage area for movement of operating/emergency equipment.

b. Ramps - The floor of the container storage area is sloped toward a sump to collect liquids in the event of a spill. The area outside of the container storage building is graded so that the ground slopes away from the building to prevent rainwater from entering.

c. Lines – Heavy-duty vacuum- and pressure-rated reinforced hoses are used for transfer bulk parts washer solvents from USTs to tank trucks.

d. Other - Hand trucks, pallet jacks, or forklifts are used to move containers between the truck and the container storage area. The hand truck is rubber-tired with no sharp or protruding points that might puncture or damage the containers.

2. If equipment is not used, justify its absence –

3. If the facility operator does not provide such equipment, identify who does - This section is not applicable because the facility operator will provide the equipment listed in Section VIII(B)(1).

C. Use of Manifests (off site facilities only)
22 CCR 66264.71, 66264.72, 66270.14(b)(19))
(40 CFR 264.71, 264.72)

Safety-Kleen utilizes manifests for incoming and outgoing waste operations:

· **Incoming wastes**

Uniform Hazardous Waste Manifests (Paper or eManifest) - A uniform

hazardous waste manifest or generator-specific manifest (not consolidated manifest) is completed for any shipment from a generator not meeting the criteria for using consolidated manifest (described below) or if the generator is not yet subject to a reclamation agreement with Safety-Kleen.

Specific Requirements for Consolidated Manifesting Operations - Safety-Kleen's closed loop waste management leasing and recollection service generates tens of thousands of shipments of hazardous waste to each of Safety-Kleen's facilities in California. Most of Safety-Kleen's customers are small quantity generators (SQGs). A SQG is one who generates less than 1000 kilograms (mg) of hazardous wastes per calendar month (22 CCR 66260.10). In order to minimize the amount of formal hazardous waste manifests produced from these SQGs, Safety-Kleen follows the requirements of Health and Safety Code 25160.2 (SB 271) for Consolidated Manifesting operations. The transporter's name and EPA I.D. number are entered in both the generator and transporter information spaces of the consolidated manifests.

· **Outgoing wastes**

Unless a variance has been granted authorizing alternate procedures or the waste meets SB 271 requirements, all wastes are manifested in compliance with 22 CCR 66263 whether they are being transported in/out of the state.

Manifests accompany shipments from the service center to the appropriate facility.

1. Describe the operational procedures to ensure that:

a. Copies of manifests are obtained from hazardous waste haulers

When the Safety-Kleen trucks return to the facility, the type and number of containers in the shipment is verified against the manifest. Both generator and hauler (Safety-Kleen driver) signatures are verified, the manifest is reviewed to verify that it is properly completed, and the TSD section is signed and dated for the wastes terminated at the service center.

b. Properly completed manifests are signed and dated to certify waste described was received

When the first load of waste is picked up, the driver completes,

signs, and dates the generator and transporter sections of the manifest, including Safety-Kleen's name and EPA identification number in both sections, before leaving the generator's location. For each shipment, the driver attaches a legible copy of the receipt for the waste collected. These receipts are used to determine the total quantity of the waste in the vehicle. After the waste is delivered, these receipts are affixed to the transporter's copy of the manifest. Each invoice contains the following information: the generating facility's name and address, EPA Identification Number, contact name, telephone number, signature of the facility's representative, proper shipping name, hazard class, DOT UN/NA number, quantity of waste collected, the date the waste was accepted, and the manifest number. For consolidated manifests, before the end of work shift, each Safety-Kleen driver enters the total volume of the waste in the vehicle on the manifest. For regular manifests, quantity of waste is entered on the manifest prior to obtaining generator's signature. The TSDF portion is completed by Safety-Kleen when the truck arrives at the Los Angeles Service Center.

c. Significant discrepancies are noted on each copy of the manifest

Any significant discrepancies are noted on each copy of the manifest.

d. Hauler is given a signed copy of the manifest

Safety-Kleen is the hauler. The transporter copies of manifests for wastes picked up by vehicles based at the Los Angeles Service center are retained at the facility for a minimum of three years.

e. Within 30 days after receipt, a signed copy is sent to generator

Within 30 days of receipt, signed copies of manifests are sent to the generator.

f. Within 30 days after receipt, a signed coy is sent to DTSC

Within 30 days of receipt, signed copies of manifests are sent to DTSC.

g. A copy of each manifest is retained for 3 years

Copies of manifests are retained for three years at the facility, as part of the Operating Record.

h. Discrepancies are reconciled with the generator and/or hauler within 15 days after receiving the waste or reported to DTSC.

If the discrepancy cannot be reconciled with the generator within 15 days after receipt of waste, the TSDF immediately submits a written report to DTSC in accordance with 22 CCR 66264.72.

2. Describe operational procedures to ensure the presence of an attendant competent to supervise all manifesting and related activities during operating hours if the facility is open to the public.

Public access to the facility operational areas is limited (see Section VII - Security). In addition, the facility manager is aware of the necessity for waste management controls and has been trained in containment and retrieval methods applicable to facility operations. Operational procedures require that no pumping, loading, or unloading operations be performed unattended.

D. Control of Hazardous Waste in General

1. Describe operational procedures to ensure that:

a. Wastes are placed in designated areas (22 CCR 66264.17, 66270.14(b)(9) and (19)) 40 CFR 264.17, 270.14(b)(9))

The business activities conducted at the facility provide lease arrangements and other services to a variety of Safety-Kleen customers. Clean solvents are distributed from the facility to Safety-Kleen customers in closed, containers, and used solvents are returned in similar containers. Upon return to the facility, the route trucks begin check-in procedure and prepare to unload the spent parts washer solvent at the main warehouse. The containers are either moved to the R&F station or stored in one of the container storage areas. The used parts washer solvent (either petroleum- or aqueous-based) is poured from the containers into one of the drum washer units from which it is pumped into one of the two nominal 12,000-gallon USTs. The drum washers have brushes to clean the containers. A small amount of used parts washer solvent (water for aqueous-based parts washer) is sprayed by a nozzle into the container for cleaning purposes. All wastes drain through the drum washers into the

tanks. The waste stored in the tank is periodically removed by suction pump into a bulk tank truck to be transferred to an appropriate recycle/treatment facility. The schematic diagram of the drum washer unit is illustrated on Figure IV-4B. The solvent sediment is periodically removed from the drum bin and placed into containers. The bin is accessible from the side of the drum washer unit and no entry into a confined space is required for the solvent sediment removal operation.

If containers of used parts washer solvent cannot be immediately poured into the drum washer unit, sealed containers may be placed in the R&F station for up to several hours before they are processed. If the drum washer unit is not operating or the waste storage tank is full, sealed containers of used parts washer solvent may be stored in the container storage area.

Labels removed from waste containers at the drum washer unit, and rags used for general cleanup in the area are placed in a container in accordance with satellite accumulation rules specified in 22 CCR 262.34. Filters from cyclonic parts washers are also placed in these containers. The container will remain open while an employee is working at the drum washer unit, and will be covered and secured with a lock ring when the drum washer unit is not in operation or containers are not being unloaded. All labels and absorbent sheets are managed and transported as hazardous waste. The waste generated from cleaning of screens in the drum washers may be added to these containers or accumulated in a dedicated container. The volume of each waste stream mentioned above does not exceed 55 gallons. These containers are managed under control of an operator when the R&F station is operational.

Wastes, such as used immersion cleaner, dry cleaning waste (perchloroethylene), and paint waste are picked up from Safety-Kleen customers in closed containers. The containers remain closed at all times during transportation and storage at the facility.

The containers are unloaded from the trucks into the warehouse using the truck's lift gate and forklifts. Containers are then moved to the designated storage areas. These containers are also periodically picked up by a Safety-Kleen truck for transportation to an appropriate facility.

All containers of permitted waste are stored in container storage areas, which are within an enclosed building with secondary

containment.

The Safety-Kleen Los Angeles Service Center USTs will contain only one waste material at a time (either petroleum-based or aqueous-based used parts washer solvent). Waste solvent are compatible materials that will not react in the unlikely event that these products were to be accidentally commingled.

Access to the USTs is limited to pouring materials through the two-drum washer units that are located in the R&F station of the facility or directly into the USTs. Accordingly, control of the materials entering the UST is best managed at this location. The following operating procedures will be utilized upon waste acceptance of solvent at the facility:

Training:
Employees that operate the R&F station are trained in the identification of all materials that may enter the UST.

As part of the daily operation the following waste acceptance procedure will be followed

1. Containers will be matched with the accompanying paperwork and be sorted by waste type. The material that is to be processed through the drum washer units and ultimately emptied into the USTs, will be staged in front of the drum washer units. Other materials along with the accompanying paper work will be moved into the drum storage areas.
2. Container lids will be removed and Safety-Kleen personal will perform a visual inspection of the material prior to pouring the material into the drum washer unit. Any material that does not meet the criteria as specified in the Waste Analysis Plan (WAP) will be set aside and investigated as to its contents. The procedures that will be followed and subsequent disposition of the material are detailed in the WAP.

b. All persons are properly protected from exposure to, or contamination with hazardous wastes
(22 CCR 66270.14(b)(8)(E))
(40 CFR 270.14(b)(8)(v))

All Safety-Kleen personnel involved with the loading, unloading, or transport of hazardous waste are protected by rubber gloves,

safety glasses, or face shield, and steel-toed rubber soled boots (a protective apron is also worn in the solvent R&F station). Generally, the solvent sediment is removed from the drum washer unit by a hand-held scoop shovel. Employees are provided with the basic protective equipment as described in Part 10.G.5. If employees work with petroleum-based solvent and/or at their request, half-face respirators with organic vapor cartridges are provided. The drum washer units are located in R&F station, which are located adjacent to the container storage area. The R&F station is open from one side, which provides ventilation to the outdoors. Studies conducted at a similar facility indicate that air quality is within acceptable limits.

c. Dispersal of wastes is prevented
(22 CCR 66264.31, 66270.14(b)(8) and (19))
(40 CFR 264.31, 270.14(b)(8))

The wastes are prevented from dispersal by adequate containment measures in all handling areas. All containers placed in the container storage areas are sealed with lids secured by lock rings. The container storage areas have secondary containment provided by berms, sloped floors, and collection trenches. Secondary containment is provided at the drum washer units through the use of a sloped concrete floor and trench under the units. These features are described in detail in Section IV.

All transfer operations where waste is pumped from one container to another is conducted in the container storage or Return and Fill areas. Active portions of trucks with valves and hoses will be located inside the secondary containment of the container storage areas or the Return and Fill area during bulking operations.

d. Production of hazardous gases, mists, or vapors is prevented
(22 CCR 66264.17(b)(2), 66264.31, 66270.14(b)(8) and (19))
(40 CFR 264.17(b)(2), 264.31, 270.14(b)(8))

All containerized wastes remain covered during all storage and transportation processes at the facility. Wastes stored in tanks are removed for recycling via flexible hoses connected with "quick disconnect" couplings to a tanker or truck. The tanks are vented in accordance with NFPA standards and there are no open tanks at the facility. Used parts washer solvent is emptied into the drum washer unit, which is quickly pumped into the tank. The used solvent collection part of the drum washer unit is covered when not in use.

e. Equipment contaminated with waste is decontaminated before being serviced or used in other than a hazardous water area
(22 CCR 66270.14(b)(8) and (19))
(40 CFR 270.14(b)(8))

All equipment used at the facility is dedicated (not to be used elsewhere). Decontamination of equipment may be necessary for servicing, routine maintenance, and for replacement and disposal. The equipment that may require decontamination is as follows:

1. Equipment that may be decontaminated for servicing:

- Pumps
- USTs
- Piping
- Drum washers
- Containers

2. Equipment that may be decontaminated for routine maintenance and for replacement and disposal:

- Personal protective equipment such as protective clothing, boots, gloves, hard hats, goggles, face shields, respirators
- Shovels and other waste handling equipment
- Flexible hoses
- Containers

The decontamination procedures used prior to servicing the tanks, pumps, and/or piping are as follows:

Any remaining hazardous material is removed from the tanks, pumps, and piping via tanker trucks. Sediment from the bottom of the tank is removed using a vacuum truck. All wastes are manifested and transported to a recycling facility. The interior of the tanks, pipelines, and pumps are rinsed with a detergent wash and clean water rinse. The rinsate is collected and stored in containers or pumped into a tanker. The rinsate is sampled, tested, and properly disposed of. The tank, pump, the piping are considered

decontaminated when the rinsate no longer exhibits hazardous characteristics.

Personal protective equipment and other waste handing equipment that comes into contact with hazardous wastes are decontaminated as follows: disposable protective clothing, rubber over-boots, gloves, and respirator cartridges are disposed as hazardous waste. Hard hats, goggles, face shields, splash aprons, and respirators are decontaminated by wiping with a cloth soaked in a phosphate-free detergent followed by rinsing with clean water for at least 5 minutes. All rinsate is collected and managed as hazardous waste.

2. Identify methods of collection and disposal of wash water used to decontaminate equipment
(22 CCR 66264.31, 66270.14(b)(8) and (19))
(40 CFR 264.31, 270.14(b)(8))

Any wash water for hazardous waste management equipment generated at the facility is pumped into an appropriate container or the waste solvent storage tank. The collected hazardous waste is sent for appropriate treatment or recycling through the Safety-Kleen Recycle Center or another approved off-site TSD facility.

3. Describe operational procedures to ensure that chance of fire or explosion is minimized
(22 CCR 66264.17, 66264.31, 66270.14(b)(8) and (9))
(40 CFR 264.17, 264.31, 270.14(b)(8))

All wastes are physically separated from ignition sources. When handling wastes, Safety-Kleen personnel are prohibited from smoking. Trucks are electrically grounded before they are loaded or unloaded since the dock where the containers are placed is grounded. Equipment (lift, or dock plate) that comes into contact with the dock is also grounded. Tanker trucks are grounded by attaching grounding equipment from the truck to the galvanized steel fill bucket of the UST. Personnel are trained in spill response, the safety handling of hazardous wastes and response to emergencies (i.e., implementation of the Contingency Plan). Safety-Kleen does not handle explosives, highly reactive or incompatible wastes. Additional procedures and equipment that minimize the chance of fire or explosion are described in the Contingency Plan.

E. Facility Inspection

1. Describe the general inspection checklist, schedule, and procedures including:
(22 CCR 66264.15, 66264.15(b)(5), 66264.33, 66270.14(b)(5))
(40 CFR 264.15, 264.33, 270.14(b)(5))

The purpose of the inspection plan is to establish a procedure and schedule for the systematic monitoring and inspection of hazardous waste management units at the facility to ensure proper operation and maintain compliance. The operations facility manager or supervisor (or designee) is responsible for conducting the inspections of all hazardous waste management units at the facility in accordance with Safety-Kleen's established procedure as described below. Inspection frequencies, and examples of inspection checklist are included in Appendices VIII-1, and VIII-2, respectively. Inspections may be performed on paper or electronically.

a. Equipment to be inspected:
(22 CCR 66264.15(b)(1), 66264.33, 66270.14(b)(5))
(40 CFR 264.15(b)(1), 264.33, 270.14(b)(5))

Inspections are performed by the facility manager or supervisor (or designee) who has been trained and assigned for such duties. A signature is required for each inspection. After completion of each tank filling or withdrawing operation by tank trucks at the facility, the Safety-Kleen inspector ensures that no waste liquids are left in the tank fill-pipe boxes and record the findings in inspection logs. Appendix VIII-1 provides an example copy of a weekly inspection log for safety and emergency/equipment security devices, and miscellaneous equipment. The weekly inspection log used at the facility contains at least the equivalent and pertinent information shown on the example forms. Attached to the log is an example list of all safety and emergency equipment, and the minimum amount of each that should be in stock. The facility maintains equivalent and pertinent safety and emergency equipment. If there is a discrepancy, the "not acceptable" section on the checklist is checked, the discrepancy is noted, and corrective action taken. The facility floor plan is available to the person doing the inspection.

Equipment to be inspected - The following equipment is inspected at the facility:

1. **Monitoring equipment including:** tank leak detectors and high level detection alarms.

2. **Safety equipment including:** fire extinguishers, eyewash station, and first aid kit.

3. **Emergency response equipment including:** fire extinguishers, personal protective equipment, spill control equipment, communications and alarm system. Appendix VIII-2 presents a list of monitoring, safety, and emergency equipment.

4. **Security devices including:** fences, gates, posted signs, locks.

5. **Structural equipment relevant to health and environmental protection** - None.

6. **Operating equipment relevant to health and environmental protection -** None

b. Types of problems to be inspected or and inspection procedures, including these items specified in:
(22 CCR 66264.15(b)(3), 66270.14(b)(5))
(40 CFR 264.15(b)(3), 270.14(b)(3))

The facility manager or supervisor (or designee) is responsible for carrying out and documenting the facility inspection each operating day. He must note any repairs that are needed and assure that they are completed. If he cannot carry out the repairs himself, he must notify the Branch Engineering Department and request assistance. Upon completion of repairs, the inspector notes the date that completed repairs were made. The types of problems noted would generally include malfunctions and deterioration, operator errors and discharges, which may be causing or may lead to: 1) release of hazardous waste constituents to the environment, or 2) a threat to human health.

1. **66264.174, Container units -** Containers are checked each operating day for visual evidence of leaks. The specific waste type is identified from the label and shipping papers that are in transit. If a container is leaking, the content of the container is transferred into the new container. The damaged container is cleaned in the drum washer area and sent to a recycle center or other approved facility.

Spills are cleaned up in a timely manner with Safety-Kleen absorbent. In general, the absorbent is used when the spill is relatively small or in emergency situations requiring containment. A small amount of absorbent is brushed into the spill. It soaks up the spilled material, which is then scraped up and stored in a container. A Safety-Kleen explosion-proof vacuum cleaner may be used to clean up contained spills. Spill residues in the floor trenches are cleaned with detergent, then rinsed.

The Branch Engineering Department handles all repairs, which require state or county permits. These types of permits often take a minimum of 60 days to obtain. The facility manager or supervisor (or designee) contacts the EHS Manager prior to undertaking repair measures necessary to ensure the health and safety of the employees and surrounding area. Other repairs, which are considered minor (i.e. hose replacement) are handled by on-site personnel in a timely manner. All repairs are documented and maintained in on-site files.

2. 66264.193(i) and 66264.195, tank systems

a. Procedures to detect leaks, corrosion, or erosion, which may lead to cracks, leaks -

The tank system was installed in 1993. The tank has an expected life of approximately 30 years. The tank system includes two 12,000-gallon USTs and two drum washer units that are connected to the USTs with pumps and piping. The drum washers are considered ancillary equipment. Safety-Kleen's inspection requires that the tank level and all connections (including transfer pumps, hoses, piping, and joints) be inspected each operating day for signs of leakage or deterioration.

b. Procedures for emptying a tank to allow entry and inspection of the interior to detect corrosion and erosion of the tanks when necessary -

If the daily inspection reveals leakage, the tank will be emptied immediately within 24 hours. The tank contents will be vacuumed into a tank truck and

transported under manifest procedures to a recycling facility. The tank will be cleaned and inspected. The inspection may include a specially trained contractor hired by Safety-Kleen to enter and inspect the tank(s).

c. **A schedule in which the frequency of the assessment is based on the materials of construction of the tank, the type of corrosion or erosion observed, and the characteristics of the waste being stored or treated** –

The tanks are inspected each operating day for rutty or loose anchoring, lack of grounding, wet spots, and discoloration or any signs of leaks. The double-walled tanks have adequate leak detectors and were leak-tested upon installation. Certified tank tester conducts all tank testing in accordance with RWQCB standards.

The tanks are assessed at the time of permit renewal by a California Registered Professional Engineer as required by 22 CCR 6627016.

3. **66264.226(b) and (c), surface impoundments -** Not applicable. No surface impoundment at facility.

4. **66264.254(b), waste piles -** Not applicable. No waste piles this facility.

5. **66264.273(g), land treatment units -** Not applicable. No land treatment units at this facility.

6. **66264.303(b), landfills -** Not applicable. No landfills at this facility.

7. **66264.347, incinerators -** Not applicable. No incinerators at this facility.

8. **40 CFR 264.573(b), drip pads -** Not applicable. No drip pads as defined in 40 CFR 264.573(b) at this facility.

9. **66264.602, miscellaneous units –** Not applicable. There is one miscellaneous unit at this facility (R&F Station).

c. **Frequency of inspection based on:**

(22 CCR 66264.15(b)(4), 66270.14(b)(5))
(40 CFR 264.15(b)(4), 270.14(b)(5))

The facility is inspected each operating day (Monday-Friday except) to ensure proper functioning and maintain compliance. The inspection schedule identifies those items inspected each operating day. In addition, other items are inspected on a weekly basis. The inspection schedule was prepared based on the following considerations:

1. **Rate of possible equipment deterioration -** The facility inspects the equipment that may cause or lead to release of hazardous waste constituents to the environment on a daily basis.

2. **Probability of environmental or human health incident due to undetected deterioration, malfunction, or operator error –** Because the USTs present the highest probability of incident caused by an undetected determination, malfunction or operator error the tanks are equipped with a continuous monitoring system. Daily inspections are performed to identify problems in time to correct them before they affect human health or the environment.

3. **Daily inspection of loading and unloading areas and other areas subject to spills -** The loading/unloading areas are inspected daily (on operating days) using an inspection form.

4. **Weekly inspection of container storage, treatment, and transfer areas -** See above in Section VIII(E)(1)(b)(1).

5. **For tanks, requirements and factors listed in 66264.193(i) and 66264.195 -** See above in Section VIII(E)(1)(b)(2).

6. **Inspection of surface impoundments weekly and after storms -** Not applicable. No surface impoundments at this facility.

7. **Inspection of waste piles weekly and after storms -** Not applicable. No waste piles at this facility.

8. **Inspection of land treatment units weekly and after**

storms - Not applicable. No land treatment units at this facility.

9. **Inspection of landfills weekly and after storms -** Not applicable. No landfills at this facility.

10. **Inspection of drip pads weekly and after storms -** Not applicable. No drip pads at this facility.

11. **For incinerators, requirements listed in 66264.347 -** Not applicable. No incinerator at this facility.

12. **For miscellaneous units, requirements listed in 66264.602 –** The R&F Station is a miscellaneous unit at the facility. The unit is inspected each day on operating days.

2. Describe procedures to ensure that:

a. Any deterioration or malfunction discovered during inspection is corrected such that no health or environmental hazard results
(22 CCR 66264.15(c), 66270.14(b)(19))
(40 CFR 264.15(c))

Any discrepancy or deficiency found during the routine inspection is corrected on an expedient basis to ensure that the problem does not lead to an environmental or human health hazard. When a hazard is imminent or an incident has already occurred, remedial action is taken immediately. The facility manager or supervisor (or designee) has the overall responsibility for rectifying any discrepancy found during the inspection.

b. The inspection checklist and schedule is kept at the facility
(22 CCR 66264.15(b)(2), 66270.14(b)(19))
(40 CFR 264.15(b)(2))

A written and/or or electronic inspection checklist and schedule is kept as part of the operating record for the facility. Electronic inspections are conducted via an ipad using inter-company Waste Information Network (WIN) software. The inspections are archived in WIN and are available for retrieval and viewing. In the rare case that the internet is down and electronic inspections cannot be uploaded, paper inspections will be completed and stored in the office at the facility. The frequency and examples of the inspection

checklists are included in Appendix VIII-1. The inspection checklists used at the facility contain at least the equivalent and pertinent information shown on the example forms.

c. Records of inspection including the following items are maintained for three years:
(22 CCR 66264.15(d), 66270.14(b)(19))
(40 CFR 264.15(d))

All required information is provided in the example inspection checklists (included as Appendix VIII-1). These items include:

1. **Date of inspection**
2. **Time of inspection**
3. **Name of inspector**
4. **Observations made**
5. **Date of any repairs or remedies**
6. **Nature of any repairs or remedies**

The completed checklists are maintained by the facility for three years or until closure of the facility.

F. Precautions for Ignitable, Reactive, and Incompatible Wastes

1. Procedures to prevent accidental ignition or reaction of waters:
(22 CCR 66264.17(a) and (c), 66270.14(b)(9))
(40 CFR 264.17(a) and (c), 270.14(b)(9))

a. Physical Separation of waste from heat sources - All wastes are physically separated from ignition sources. Additional procedures and equipment that minimize the chance of fire or explosion are described in Section VIII(D)(3) and the contingency plan.

b. "No Smoking" signs are located at the facility in areas that contain flammable chemicals. Smoking is only permitted in designated smoking areas.

c. Other appropriate precautions – Reactive and incompatible wastes are not handled at this facility. Bonding and grounding

precautions are observed when transferring flammable and combustible liquids.

2. Procedures to prevent accidental mixing of incompatible wastes (22 CCR 66264.177(c), 66264.199, 66270.14(b)(9), 66270.16(i)) (40 CFR 264.177(c), 264.199, 66270.14(b)(9), 66270.16(j))

Not applicable. Safety-Kleen does not handle incompatible wastes.

3. Procedures to prevent reactions which (when handling ignitable or reactive wastes or mixing incompatible wastes): (22 CCR 66264.17(b), 66270.14(b)(9)) (40 CFR 264.17(b), 270.14(b)(9))

Not applicable. Safety-Kleen does not handle reactive or incompatible wastes.

a. Generate extreme heat or pressure, fire, or explosions, or violent reactions

b. Produce uncontrolled toxic mists, fumes, dust, or gases -

c. Produce uncontrolled flammable fumes or gases -

d. Damage the structural integrity of the unit -

e. Otherwise threaten human health or the environment -

G. Operating Record (22 CCR 66264.73, 66270.14(b)(19)) (40 CFR 264.73)

1. Describe procedures for maintaining a written operating record

All records generated at the facility are made a part of the permanent operating record.

2. List types of information recorded

Safety-Kleen maintains a written operating record at the facility until its closure. This record includes copies of the Operating Log, manifests, location of hazardous waste management units, records of monitoring, summary reports and details of incidents that require implementation of the contingency plan, any spill or accident report, unmanifested waste report, inspection checklist reports, and other similar information

pertaining to the operational history of the facility, as they become available. Transfer (operating) log and manifests show volumes going in and out of facility.

H. Unmanifested Waste Report
(22 CCR 66264.76, 66270.14(b)(19))
(40 CFR 264.76)
Describe procedures for preparing and submitting to DTSC, within 15 days of receipt of waste, an unmanifested waste report to include the following:

Safety-Kleen does not accept hazardous waste transported to the facility without a manifest, under normal circumstances. In the event of an emergency, Safety-Kleen will try to ascertain the following items and report verbally within 24-hours to the DTSC. Within 15 days a written report will be submitted to the DTSC with the following, if obtained:

1. **Identification number of facility -**

2. **Name of facility -**

3. **Address of facility -**

4. **Date the facility received the waste -**

5. **Identification number, name, and address of the generator and the transporter -**

6. **Description and the quantity of each unmanifested hazardous water received -**

7. **The method of transfer, treatment, storage, or disposal for each hazardous waste -**

8. **Certification signed by facility owner/operator -**

9. **Explanation of why waste was unmanifested -**

I. Annual Report
(22 CCR 66264.75, 66270.14(b)(19))
(40 CFR 264.75)
Describe procedures for preparing and submitting to DTSC and RWQCB by March 1 of each year, an annual report for prior calendar year, including the following:

Safety-Kleen's annual report procedure includes provisions to identify all the

information requested. The annual report is submitted by March 1 each year or as required by the appropriate agencies. Each annual report will include the following information:

1. **Identification number**

2. **Name of facility**

3. **Address**

4. **Calendar year covered by the report**

5. **For offsite facilities, the Identification number, name and address of each generator from which hazardous waste was received during the year. (For imported shipments, include the name and address of the foreign generator)**

6. **Description and the quantity of each hazardous waste received during the year. For offsite facilities, this information shall be listed by the identification number of each generator**

7. **The method of transfer, treatment, storage, or disposal for each hazardous waste**

8. **The most recent closure cost and post-closure estimates for the facility**

9. **Signed certification**

10. **Environmental monitoring data specified in 66264.73**

11. **Certification for wastes, shipped offsite after 1/1/90**

12. **For onsite facilities, a description of efforts undertaken to reduce volume and toxicity of wastes generated**

13. **For onsite facilities, a description of changes in volume and toxicity of waste achieved in current year versus prior years**

J. Records Available for DTSC Inspections
(22 CCR 66264.74(a), 66270.14(b)(19))
(40 CFR 264.74(a))

All records required for compliance with hazardous waste laws and regulations

are kept at the facility office in a designated file. All records required are retained in accordance with appropriate regulatory requirements.

K. Additional Reports
(22 CCR 66264.77, 66270.14(b)(19))
(40 CFR 264.77)

Safety-Kleen will generate additional reports as necessary. These would be developed in such cases as:

1. **Releases, fires, explosions**

2. **Facility closures**

3. **Others, as required by Articles 6, and 11 through 14 of 22 CCR, Division 4.5, Chapter 14**

APPENDIX VIII-1

INSPECTION FREQUENCIES
&
EXAMPLE INSPECTION CHECKLISTS

INSPECTION FREQUENCIES

AREA	INSPECTION FREQUENCY
CONTAINER STORAGE AREAS	DAILY (OPERATING DAYS)
TANK SYSTEM	DAILY (OPERATING DAYS)
SAFETY/SECURITY	WEEKLY
MONITORING CERTIFICATION TESTING	ANNUAL
SECONDARY CONTAINMENT TESTING (SB 989)	EVERY 3 YEARS
CATHODIC PROTECTION TESTING	EVERY 3 YEARS
INTEGRITY TESTING BY INDEPENDENT PE	EVERY 3 YEARS
LINE LEAK DETECTION TESTING	ANNUAL

CO CSA Inspection

Form Code: 28

Compliance Header	
Inspector Name	
Area of Inspection	
Inspection Date and Time	
CO CSA Inspection Instructions	
Note condition of inspection items. If item does not apply to an area, mark N/A. All unsatisfactory findings must be explained below. Include any repairs, changes or other remedial actions required or performed.	
CO CSA Inspection Items	
Container Placement and Stacking - Check for evidence of failure (e.g., containers on pallets, pallets too high, unstable, other).	
Sealing of Containers - Check for evidence of failure (e.g., containers not closed or sealed, open).	
Labeling of Containers - Check for evidence of failure (e.g., no label, improper label, content, other).	
Container Integrity - Check for evidence of failure (e.g., condition, bulging, leaks, rust, corrosion, other).	
Pallets - Check for evidence of failure (e.g., broken, loose, condition).	
Doors - Check for evidence of failure (e.g., indoor area, broken or not working as intended).	
Base/ Foundation/ Roof - Check for evidence of failure (e.g., cracked, gaps, other).	
Berms/ Racks - Check for evidence of failure (e.g., cracks, gaps, broken, other).	

Debris and Refuse - Check for evidence of failure (e.g., proper storage, location, container type, other).	
Exit Signs - Check for evidence of failure (e.g. missing, lamps, battery backup, other).	
Aisle Space - Check for evidence of failure (e.g., minimum 30 inches required, other).	
Containment Area - Check for evidence of failure (e.g., secondary containment, curbing, floor, cracks, deterioration, ponding or wet spots, other).	
Sumps - Check for evidence of failure (e.g., cracks, ponding or wet spots, pitting or deterioration, other).	
Loading/ Unloading Areas - Check condition of area (e.g., available equipment, spill response, containment, pad condition, valve access box, ponding or wet spots, other).	
Communication and Alarm System - Check for evidence of failure (e.g., test function, siren, strobe, other).	
Storage Capacity - Check for acceptable limit (e.g., area or permit retrictions, type restriction, volume limit, other).	
Bonding and Grounding - Check for evidence of failure (e.g., loose, broken, corrosion or deterioration, other).	
Pumps - Check for evidence of failure (e.g., deterioration or broken, leaks, other).	
Inventory Age - Check for acceptable limit (e.g., within area limits, permit restrictions, other).	
Satellite Accumulation Containers - Check for condition and appropriate for area (e.g., filter/basket, solids, label and marking, other).	
Compliance Footer	
Inspector Signature	
Attach Photo	

Inspection Overall Assessment	

CO Safety Security Inspection

Form Code: 29

Compliance Header	
Inspector Name	
Area of Inspection	
Inspection Date and Time	
CO Safety Security Inspection Instructions	
Note condition of inspection items. If item does not apply to an area, mark N/A. All unsatisfactory findings must be explained below. Include any repairs, changes or other remedial actions required or performed.	
CO Safety Security Inspection Items	
Perimeter Fences - Check for evidence of failure (e.g., broken ties, corrosion, holes, distortion, other).	
Gates/External Warehouse Doors - Check for evidence of failure (e.g., locking mechanism, broken ties, corrosion, holes, distortion, direct access doors working properly, other).	
Warning Signs - Check for evidence of failure (e.g., missing, faded, other).	
Exit Signs - Check for evidence of failure (e.g., missing sign, illumination, lamp bulbs, battery backup, other).	
Exits/Firelanes/Evacuation Routes - Check that all routes are clear or unobstucted.	
Lighting System - Check for evidence of failure (e.g. expired lamps, effectiveness, location, other).	
Emergency Lighting System - Check for evidence of failure (e.g., expired lamps, battery backup, effectiveness, other).	
Accessibility of Safety Equipment/Protective Gear - Check for evidence of availability (e.g.,	

hardhats, faceshields, goggles, safety glasses, boots, gloves, aprons, uniforms, duct tape, absorbents, other).	
Adequate Supply of Safety Equipment/Protective Gear - Check for evidence of availability (e.g., cleanliness, inventory available, other).	
Condition of Safety Equipment - Check for evidence of failure (e.g., review PPE for damage or excessive wear, other).	
Breathing Apparatus Accessibility - Check for evidence of availability (e.g. SCBA respirators, equipment, other).	
Breathing Apparatus Adequate Supply/Full Charge - Check for evidence of availability (e.g., SCBA tanks, charged, other).	
Breathing Apparatus Condition - Check for evidence of failure (e.g., SCBA damage, other).	
First Aid Kits - Check for evidence of availability (e.g., adequate inventory, other).	
Bloodborne Pathogen Kits - Check for evidence of availability (e.g., adequate inventory, other).	
Emergency Eyewashes - Check for evidence of failure (e.g., disconnected or malfunctioning valves, inadequate pressure, inaccessible, malfunctioning drain, leaking, other).	
Emergency Showers - Check for evidence of failure (e.g., disconnected or malfunctioning valves, inadequate pressure, inaccessible, leaking, other).	
Internal/External Communication - Check for evidence of failure (e.g., inadequate supply of phones or radios, malfunctioning intercom, telephones not working properly, emergency alarm does not work, phone moved from proper location, other).	
Fire Extinguishers - Check for evidence of failure (e.g., overdue inspection, not charged,	

inaccessible, other).	
Absorbent Supply - Check for evidence of availability (e.g., adequate inventory, other).	
Recovery Drum Supply - Check for evidence of availability (e.g., adequate inventory, other).	
Respirators and Cartridges - Check for evidence of availability (e.g., adequate APR inventory, other).	
Fire Suppression System Accessibility - Check for evidence of failure (e.g., monitors, pull stations, alarms, other).	
Fire Suppression System Operable - Check for evidence of failure (e.g., test, other).	
Water Lines/Hydrants - Check for evidence of failure (e.g., blocked, broken, other).	
Alarm Systems - Check for evidence of failure (e.g., test, other).	
Fire Blankets - Check for evidence of availability (e.g., adequate inventory, other).	
Strainer on Fire Suppression System - Check for evidence of failure (e.g., functioning as intended, other).	
Surveillance System/Guard Service - Check for evidence of failure (e.g., equipment or service provided and functioning properly, other).	
Supplied Air Delivery System and Reserve - Check for evidence of failure (e.g., system operational, epuipment functioning, other).	
Decontamination Equipment/Spill Clean-up Equipment - Check for evidence of availability (e.g., adequate supply of shovels, mops, cleaning solvents, available inventory, other).	
Portable Sump Pumps - Check for evidence of availability (e.g., adequate inventory, functioning properly, other).	
Gasoline Pumps - Check for evidence of failure (e.g., broken parts, leaks, other).	

Loud Speakers - Check for evidence of failure (e.g., test, other).	
Chocked Wheels on Parked Vehicles - Check for evidence of failure (e.g., chocks not used, missing, deteriorated, other).	
Cylinders Secure - Check for evidence of failure (e.g., properly stored, secured, chained, other).	
Ventilation Operable - Check for evidence of failure (e.g., system working as intended, other).	
Fall Protection - Check for evidence of availability (e.g., adequate inventory, integrity of equipment, other).	
Electrical Boxes - Check for evidence of failure (e.g., closed, not blocked, marked properly, other).	
Emergency Contact Info Posted - Check for evidence of availability (e.g., up-to-date postings, location requirement, other).	
Hearing Protection Available - Check for evidence of availability (e.g., type appropriate per location, other).	
Housekeeping - Check for evidence of failure (e.g., blocked egress, proper storage, procedure followed, other).	
Portable Compressor - Check for evidence of availability (e.g., adequate inventory, functioning properly, other).	
Lime Supply - Check for evidence of availability (e.g., adequate inventory, other).	
QC Lab Hood - Check for evidence of failure (e.g., functioning properly, other).	
Rolloff Parking Area - Check for evidence of failure (e.g., housekeeping, staging, other).	
Dumpster/Outside Containers - Check for evidence of failure (e.g., housekeeping, condition, appropriate use and storage, other)	

Stormwater Collection System - Check for evidence of failure (e.g., functioning properly, damaged equipment, integrity, other).	
Rally Point - Check for evidence of failure (e.g., location identified, communication, other).	
Visitor Log - Check for evidence of failure (e.g., available, communication, proper use, other).	
Contingency Plan - Check for evidence of failure (e.g., available, up-to-date, communication, other).	
Wind Instrument/Wind Sock - Check for evidence of failure (e.g., operational, functioning properly, not broken, other).	
Compliance Footer	
Inspector Signature	
Attach Photo	
Inspection Overall Assessment	

CO Tank Systems Inspection

Form Code: 27

Compliance Header	
Inspector Name	
Area of Inspection	
Inspection Date and Time	
CO Tank Systems Inspection Instructions	
Note condition of inspection items. If item does not apply to an area, mark N/A. All unsatisfactory findings must be explained below. Include any repairs, changes or other remedial actions required or performed.	
CO Tank Systems Inspection Items	
Tanks - Check for evidence of failure (e.g., rusty or loose anchoring, distortion, paint failure, other).	
Pipes/Piping Supports - Check for evidence of failure (e.g., distortion, corrosion, paint failure, other).	
Valves - Check for evidence of failure (e.g., disconnected, corrosion, sticking, leaks, other).	
Fittings/Hose Connections - Check for evidence of failure (e.g., loose, disconnected, corrosion, other).	
Liquid Level - Check for acceptable level. (e.g., high level max, permitted volume, other).	
Secondary Containment - Check for evidence of failure (e.g., cracks, ponding or wet spots, pitting or deterioration, other).	
Sumps - Check for evidence of failure (e.g., cracks, ponding or wet spots, pitting or deterioration, other).	
Bonding and Grounding - Check for evidence of failure (e.g., loose, broken, corrosion or deterioration, other).	

Transfer Equipment/Pump and Pump Motors - Check for availability and condition (e.g., pumps, filters, strainers, hoses, leaks, overheating, other).	
Communication and Alarm System - Check for evidence of failure (e.g., test function, siren, strobe, other).	
Satellite Accumulation Containers - Check for condition and appropriate for area (e.g., filter/basket, solids, label and marking, other).	
Manways, Hatches, Other Openings - Check for evidence of failure (e.g., condition, corrosion, closure, other).	
Pressure Relief Valves (PRV)/ Flame Arrestors - Check for evidence of failure (e.g., condition, corrosion, other).	
Tanks marked with the words "Hazardous Waste" - Check for appropriate markings.	
Tanks not used marked as "Out of Service" - Check for appropriate markings.	
Tanks marked as to the contents - Check for appropriate markings (e.g., Non-Haz Only).	
Monitoring Equipment/Level Indicators - Check for evidence of failure (e.g., pressure and temperature gauges, level indicators, sticking, condensation, disconnected, other).	
Loading/ Unloading Areas - Check condition of area (e.g., available equipment, spill response, containment, pad condition, valve access box, ponding or wet spots, other).	
Compliance Footer	
Inspector Signature	
Attach Photo	
Inspection Overall Assessment	

CO Weekly SPCC Inspection

Form Code: 937

Compliance Header	
Inspector Name	
Area of Inspection	
Inspection Date and Time	
Weekly SPCC Inspection Instructions	
Fully explain all items that need immediate attention in the comment section after each question that fails. Include the location of the deficiency and the corrective action necessary.	
A. Drainage/Containment	
Any noticeable sheen on run off?	
Containment area drainage valves closed and locked?	
No visible oil sheen in containment area?	
No standing water in containment area or sump?	
Containment floor and walls free of cracks?	
Containment free of weeds (inside and out)?	
Drip pans not overflowing, properly labeled (why do we have drip pans in tank farm?)	
B. Pipelines	
No sign of corrosion or other damage to pipes and or supports?	
Buried pipes are not exposed (if applicable)?	
Out of Service Pipes capped?	
Signs and barriers to protect pipelines from vehicles are in place and visible?	
No leaks at valves, flanges or other fittings (check EACH connection)?	
C. ASTs	
Tank surfaces checked for signs of leakage?	

Tank condition good (no rusting, corrosion, pitting)?	
Bolts, rivets, and or seams are not damaged?	
Tank foundation intact?	
Level gauges and alarms working properly?	
Vents not obstructed?	
Manways, flanges, and gaskets free from leaks?	
D. Truck Loading/Unloading Area	
No standing water in rack area?	
No leaks in hoses, stored with caps in place?	
Drip pans not overflowing, properly labeled?	
Catch basins free of contamination?	
Containment curbing or trenches intact?	
Connects are capped or blank flanged?	
Eye wash station available and functioning and stocked?	
E. Security	
Fence and gates intact?	
Access doors and overhead doors have locks?	
AST valves locked when not in use?	
Starter controls for pumps locked when not in use?	
Lighting is sufficient and functioning properly?	
Compliance Footer	
Inspector Signature	
Attach Photo	
Inspection Overall Assessment	

APPENDIX VIII-2

AVAILABLE MONITORING, SAFETY, AND EMERGENCY EQUIPMENT

EQUIPMENT	TYPE	QUANTITY	STORAGE LOCATION	CAPABILITIES
TANK HIGH LEVEL ALARM	LIQUID SENSOR	1 EACH TANK	AT THE TANK	DETECT LEVEL IN TANK, TOTAL GALLONS IN TANK, AND INCHES OF WATER IN TANK
TANK LEAK DETECTION SYSTEM	LIQUID SENSOR	1 EACH TANK	BETWEEN PRIMARY AND SECONDARY TANK	DETECT FLUID BETWEEN TANK WALLS
	LIQUID SENSOR	1 EACH TANK	AT THE SUPPLY AND RETURN MANHOLE	DETECT FLUID LEAK IN DOUBLE WALL PIPELINE
	LIQUID SENSOR	1 EACH TANK	AT THE TANK ACCESS MANHOLE	DETECT FLUID IN MANHOLE
	LIQUID SENSOR	1 EACH TANK	AT THE FILL/SUCTION MANHOLE	DETECT FLUID IN MANHOLE
FIRE BLANKET		1	NEAR EMERGENCY RESPONSE KIT	FIRE EXTINGUISHING FOR PERSON ON FIRE
FIRE EXTINGUISHER	ABC	25	THROUGHOUT FACILITY (SEE FIGURE 10-1)	FIRE EXTINGUISHING
EYE WASH STATIONS	PULL STATION AND BOTTLE	9	THROUGHOUT FACILITY (SEE FIGURE 10-1)	FLUSHING EYE
SAFETY SHOWER		2	SEE FIGURE 10-1	DECONTAMINATION
COMMUNICATION SYSTEM	TELEPHONE	28-30	THROUGHOUT FACILITY (SEE FIGURE 10-1)	COMMUNICATING EMERGENCIES
NO SMOKING SIGNS		ABOUT 20	THROUGHOUT FACILITY	WARNING NOT TO SMOKE
FIRST AID KITS		5	THROUGHOUT FACILITY (SEE FIGURE 10-1)	FIRST AID SUPPLIES
EMERGENCY RESPONSE SPILL KIT		1	MAIN WAREHOUSE (SEE FIGURE 10-1)	RESPOND TO MINOR SPILLS, FIRE

APPENDIX VIII-3

AVAILABLE MONITORING, SAFETY, AND EMERGENCY EQUIPMENT

EQUIPMENT	TYPE	QUANTITY	STORAGE LOCATION	CAPABILITIES
TANK HIGH LEVEL ALARM	LIQUID SENSOR	1 EACH TANK	AT THE TANK	DETECT LEVEL IN TANK, TOTAL GALLONS IN TANK, AND INCHES OF WATER IN TANK
TANK LEAK DETECTION SYSTEM	LIQUID SENSOR	1 EACH TANK	BETWEEN PRIMARY AND SECONDARY TANK	DETECT FLUID BETWEEN TANK WALLS
	LIQUID SENSOR	1 EACH TANK	AT THE SUPPLY AND RETURN MANHOLE	DETECT FLUID LEAK IN DOUBLE WALL PIPELINE
	LIQUID SENSOR	1 EACH TANK	AT THE TANK ACCESS MANHOLE	DETECT FLUID IN MANHOLE
	LIQUID SENSOR	1 EACH TANK	AT THE FILL/SUCTION MANHOLE	DETECT FLUID IN MANHOLE
FIRE BLANKET		1	NEAR EMERGENCY RESPONSE KIT	FIRE EXTINGUISHING FOR PERSON ON FIRE
FIRE EXTINGUISHER	ABC	25	THROUGHOUT FACILITY (SEE FIGURE 10-1)	FIRE EXTINGUISHING
EYE WASH STATIONS	PULL STATION AND BOTTLE	9	THROUGHOUT FACILITY (SEE FIGURE 10-1)	FLUSHING EYE
SAFETY SHOWER		2	SEE FIGURE 10-1	DECONTAMINATION
COMMUNICATION SYSTEM	TELEPHONE	28-30	THROUGHOUT FACILITY (SEE FIGURE 10-1)	COMMUNICATING EMERGENCIES
NO SMOKING SIGNS		ABOUT 20	THROUGHOUT FACILITY	WARNING NOT TO SMOKE
FIRST AID KITS		5	THROUGHOUT FACILITY (SEE FIGURE 10-1)	FIRST AID SUPPLIES
EMERGENCY RESPONSE SPILL KIT		1	MAIN WAREHOUSE (SEE FIGURE 10-1)	RESPOND TO MINOR SPILLS, FIRE

PART IX

PERSONNEL TRAINING PROGRAM

IX. PERSONNEL TRAINING PROGRAM

A. Introductory Program Outline
(22 CCR 66264.16, 66278.14(b)(12))
(40 CFR 264.16, 270.14(b)(12))

The purpose of training is to familiarize Safety-Kleen employees with environmental regulations, recordkeeping and documentation, health and safety, and emergency procedures so they can perform their jobs in the safest and most efficient manner possible. The program is designed to ensure that facility personnel perform their duties in compliance with this permit and are able to respond effectively to emergencies by familiarizing themselves with emergency procedures, emergency equipment, emergency systems, and contingency plans.

Each employee is trained to operate and maintain the facility safely, and to understand hazards unique to the job assignment. This section contains information on Service Center personnel and trainers, job descriptions, training outlines and training record forms. All employees at the facility have had training that satisfies the requirements of 22 CCR 66264.16. The regional environmental professional directly assists with the training of new Branch General Managers (BGMs). The BGM in turn, trains his/her employees. An employee may not work in an unsupervised position until he or she has received proper training as outlined in Appendix IX-1.

1. Type of Training
(22 CCR 66264.16(d)(3))
(40 CFR 264.16(d)(3))

Employee training is implemented through classroom, computer-based or electronic instruction, or on-the-job training that teaches facility personnel to perform their duties in a way that ensures the facility's compliance with the requirements of this chapter and section 5192, subsection (p), of Title 8, California Code of Regulations. . Initially, an experienced supervisor accompanies the new employee for the on-the-job training in his daily activities for approximately 5 days or until mastery of the job tasks. This ensures that the new employee is exposed to daily operating procedures and conditions. Classroom training is undertaken by all employees (as appropriate).

2. Qualifications of Training Director
(22 CCR 66264.16(a)(2))
(40 CFR 264.16(a)(2))

The Corporate Training and Environmental Compliance Departments are responsible for developing the training program for Safety-Kleen employees and for implementing and presenting the training programs. The minimum qualifications for the Environmental Compliance personnel include a college degree in an engineering or environmental science field, and 3 to 5 years of hazardous waste experience. Regional Trainers attend in-house training courses prior to starting their job duties. Yearly sessions are also provided for policy changes and corporate planning purposes. The BGM, or Environmental

Compliance Manager (ECM) are responsible for implementing and presenting training programs.

Employees are provided Introductory and continuous training specific to their jobs. This training is described below and is followed by a discussion of the specific training for each job description.

3. Content of Training Program:
(22 CCR 66264.16(a)(2), (a)(3), and (a)(4))
(40 CFR 264.16(a)(2) and (a)(3))

a. Hazardous waste management procedures, such as using, inspecting, repairing and replacing facility emergency and monitoring equipment

Safety-Kleen employees attend a formal Introductory Training Program. This training includes classroom sessions and on-the-job training. Each training program is designed to address those issues, which may arise during the fulfillment of the job responsibilities assigned to each job type. Regional environmental compliance personnel are responsible for training the BGMs, and other employees (as appropriate) in order to maintain compliance at the service centers in a given geographic area of the country. The Environmental Compliance Department provides a training program, which addresses the requirements of local, state, and federal environmental regulations and corporate policy.

The Introductory Training program consists of 24 hours training in hazardous waste operations and emergency response (HAZWOPER) and a general overview of the hazardous waste management program. See example course agenda in Appendix IX-1. As presented in Table IX-1, Introductory Training is specific to job types. Introductory Training also includes Core (RCRA/Part B) Training (Appendix IX-2) and Health and Safety Training. Introductory Training also include job-specific training, and Part B permit review (partial or total). Job descriptions may change periodically. Example job descriptions in Appendix IX-3 are current at the time of this application, but are examples only, because changes may occur over time. Employees are tested using written tests and through oral discussions.

Core (RCRA/Part B) Training is provided to employees within six months of their employment and annually thereafter based on their position.

The training department periodically reviews training requirements and updates them in accordance with regulatory changes and identified areas for improvement. Consequently, the training materials and requirements will change. The materials provided are examples of the current programs and are not intended to prevent the company from making improvements in the training during the life of the permit. Introductory Health and Safety Training is a 24-hour course for new hires.

Core training includes, but not limited, to the following:

1. Material Information - Chemical descriptions and a Safety Data Sheet (SDS) for the hazardous material are available on site to employees. The information on these sheets is also necessary in the case of a spill or a disaster/fire.

   As additional chemicals are added to facility operations, Product Bulletins and SDSs will be available from the corporate technical services department and will be provided to employees.

   Personnel are made aware of the hazards associated with each waste and taught proper response actions for spills, fires, or accidents through in-house training sessions including videotapes and role-playing sessions. Applicable personnel are instructed on non-compatibility of materials, inspection procedures, required recordkeeping, (waste tracking manifests, inspections), required reports (annual, discharges, fires and explosions), and manifesting prepackaging and labeling. These spill procedures are described in Part X, Contingency Plan.

2. Field Tests - Employees are taught field methods through visual observations to determine the type of liquid in the event of a spill. These methods include observations such as color, volume, and checking the label and SDSs of spills from a container. All personnel wear respirators during field tests.

3. Contingency Plan and Emergency Procedures and Implementation

   - Facility contingency plan and emergency procedures
   - How to use, inspect, repair, and maintain emergency and monitoring equipment
   - Key parameters for feed shut-off, facility valves, and segregating of tanks
   - Use of communication and alarm systems
   - Response to surface water and groundwater contamination incidents
   - Response actions for fires, spills, or explosions, and notification procedures
   - Shutdown of operations
   - Normal operating responsibilities including use of personal protective equipment.

4. Preparedness and Prevention - The training program includes training in preparedness and prevention including:

- Importance of safety on the job and the use of safety equipment
- Routine inspection as a prevention tool
- Separation of ignitable waste from other waste
- Use of manifest system

The training program includes instructions that teach facility personnel hazardous waste management procedures. Personnel are instructed on procedures for handling products and waste. Personnel receive on-the-job training concerning the process equipment, which includes the tanks, dumpsters, and drum washer units.

The BGM, and other employees (as appropriate) are kept informed of current regulations by the Environmental Compliance Department. Applicable regulatory information on hazardous waste handling, processing, and storage are explained to personnel. Personnel are informed of safety operating and correct procedures before handling hazardous materials and waste.

5. Other Specific Training Items - Employees are taught the following:

   a. Measuring volume of solvent in underground tanks.
   b. Inspecting solvent dispensing and collecting equipment for leaks and damage or wear that could cause a leak to develop.
   c. Maintenance Instruction including: 1) spent solvent tank pickups are scheduled in advance so that the tank is not overfilled and 2) any fault observed during inspection will be repaired as soon as possible (i.e., order replacement parts as soon as detected).
   d. How to help the BGM, and other employees (as appropriate) carry out their responsibility for notification procedure for a major spill.
   e. Anti-pollution responsibilities including:
      - Prompt reporting and cleanup of any spill
      - Prompt report of any situation that could lead to a spill
      - Exercise of care in any action during which a spill could occur
      - Yearly employee review of spill prevention plans
      - Maintenance of training records kept at the facility.
   f. Communications/alarm systems – Please see above, Section IX(A)(3)(C).
   g. Response to groundwater contamination incidents - Please see above, Section IX(A)(3)(C).
   h. Shutdown of operations, including automatic waste feed cut-off systems - Please see above, Section IX(A)(3).
   i. First aid/CPR - Please see above, Section IX(A)(3).
   j. Protective clothing/equipment - Please see above, Section IX(A)(3).
   k. Medical surveillance - Please see above, Section IX(A)(3).
   l. Response to fires and explosions - Please see above, Section IX(A)(3).

B. Continuing Program Outline
(22 CCR 66264.16, 66270.14(b)(12))
(40 CFR 264.16, 270.14(b)(12))

Continuous training is done on a weekly, monthly, quarterly, annually, and/or biennially, and includes topics such as the example topics listed in Appendix IX-3. The training may be classroom or on-the-job. Continuous training may be recorded electronically or on Training Attendance Sheets similar to the examples in Appendix IX-4.

1. Type of Training
(22 CCR 66264.1(d)(3))
(40 CFR 264.16(d)(3))

Table IX-1 illustrates the type of introductory, and continual training for each job type. The amount of training for each job type is as listed below. All employees receive the Core (RCRA/Part B) Training (which covers those topics required by 22 CCR 66264.16(c)) and 8 hours of Health and Safety training annually. All employees also receive Continuous Training on the example topics listed in Appendix IX-2-5 that apply to their position.

<u>Annual Training</u>
The Annual Training for all employees is the Core (RCRA/Part B) Training and an 8-hour Health and Safety refresher.

Biennial Training
General awareness and function-specific training is provided to the facility personnel who are involved with hazardous waste management activities at least every 24 months. General awareness training provides a description of the facility and an overview of the activities that deals with hazardous waste including, but not limited to, conditions stated in Part B Permit, and security and safety considerations.

The material covered in the initial and/or biennial job-specific training covers the topics listed below based on employees' positions.

Review of the Part B Permit Application
- Part A
- Waste Analysis Plan
- Preparedness and Prevention Plan
- Contingency Plan
- Training Program
- Closure Plan and Financial Requirements

- Review of Transportation Licensing
- EHS Filing System Review
- Review Facility Specific Manifesting Procedures
- Review past agency inspections and other facility compliance related issues
- Environmental Training of facility personnel

- RCRA overview
- Hazardous Waste Management
- Implementation
    - Identification and Listing of Hazardous Waste
    - General Regulations
    - TSDF Regulation
    - Enforcement
    - Facility Operation
- Part B Permit
    - SPCC Plan Review
    - Training
    - Closure
    - Inspections
    - Transportation Licensing
    - Manifesting

Job-specific training for different positions includes:

Branch General Manager - The BGM is responsible for the operations at the service center. The branch sales managers, sales representatives, administrative, and material handlers report directly to the BGM who provides the training and equipment necessary for the operations employees to execute their duties. At a minimum, this training includes the Core (RCRA/Part B) Training and Health and Safety Training and additional topics pertinent to the job position.

Prior to beginning their duties, the BGM receives approximately 12 weeks of training, which includes three weeks of classroom and four weeks of training branch. The BGM then receives an additional four weeks of training at his/her designated operations center under the tutelage of a divisional trainer. This field training includes one-on-one training with the Environmental Compliance Manager. An example of the BGM job description is presented in Appendix IX-3.

Market Sales Managers (MSMs) and Market Sales Specialists (MSSs) - Training of the sales managers and specialists consist of up to 45 hours of training at the facility office as well as a one-week instructional period at Corporate. Sales Manager training includes Core, and continual training shown in Table IX-1. Training
Examples of job descriptions for the Sales Specialists, are presented in Appendix

IX-3.

Branch Admin - Branch administrative personnel receive the Introductory Core (RCRA/Part B) Training and are trained in the proper recordkeeping procedures as soon as they begin working for Safety-Kleen. While they are not usually responsible for preparing the documentation, they must check it for accuracy and completeness and then process or file it as required. Training includes emergency response, shipping documents (including manifests), drum labels and other safety and environmental compliance issues, and contingency plan and emergency procedures. Branch Admin training includes Core, and continual training shown in Table IX-1.
An example of the job description for the branch admin is presented in Appendix IX-3.

Sales and Service Representative (SSR) - The SSR training includes Core, and continual training shown in Table IX-1.
An example of the job description for the sales representative is presented in Appendix IX-3.

Material Handlers (Return/Fill) - A material handler is trained to maintain the operation center and assist other facility employees in their tasks. The material handler receives approximately 5 days of in-house training presented by the BGM. Additional days may be necessary depending on the employee's level of mastery. Core, and continual training for Material Handles are shown in Table IX-1. An example of the job description for the Material handler is presented in Appendix IX-3.

If assigned to perform facility inspections, the employee receives training from the BGM regarding actual inspection procedures and recordkeeping.

An example training topics (matrix) is included in Appendix IV-4.

Tri-annual training
Facility personnel engaged in shipping hazardous waste are triennially trained with their responsibilities in accordance with 49 CFR 172.704. Table IX-1 includes training and frequency requirements.

2. Qualifications of Training Director
(22 CCR 66264.16(a)(2))
40 CFR 264.16(a)(2))

See Section IX(A)(2)

3. Contents of Training Program
(22 CCR 66264.16(a)(2) and (a)(3), and (a)(4))
(40 CFR 264.16(a)(2) and (a)(3))

Continuous training covers overall facility procedures and operations such as

personal safety and emergency procedures. Classroom training may include videos, webinars, web based training, etc. Typical subjects covered are listed in Appendix IX-2. Additional training subjects may be added as required by corporate policy or as facility operations change. Specific topics discussed may vary periodically but all topics listed in Appendix IX-2 will be covered at least annually, either at one time or on a periodic (i.e., monthly) basis.

4. **Type and amount of training for each job title**
   (22 CCR 66264.16(a)(2) and (d)(3), 66270.14(b)(12))
   (40 CFR 264.16(a)(2) and (d)(3), 270.14(b)(12))

   See Section IX(A), and (B) above.

5. **Introductory and continuing training program implementation and schedule**
   (22 CCR 66264.16(b) and (c), 66270.14(b)(12))
   (40 CFR 264.16(b) and (c), 270.14(b)(12))

   See Table IX-1.

6. **Training program records, including**
   (22 CCR 66264.16(d), 66270.14(b)(12)) (40 CFR 264.16(d), 270.14(b)(12))

   Training records are maintained until closure of the facility. Training records for current employees are maintained until closure of the facility except for those who leave Safety-Kleen. Records of former employees are maintained for three years from termination date. Training records are maintained in the facility's environmental filing system and may include:

   a. **Job title for each position and name of employee filling each position** Example of the title of the employees at the service center requiring training and descriptions of qualifications and duties under each title are provided in Appendix IX-3.

      Employees are tested to demonstrate their knowledge of the training topics during the classroom sessions. The employee is expected to answer test questions correctly in order to successfully fulfill his/her job requirements.

   b. **Job description for each position (to include required skills, education, or other qualifications and duties) -** See Appendix IX-3.

   c. **Description of type/amount of introductory and continuing training for each position -** See Table IX-1.

   d. **Documentation that required training/experience has been completed by each employee –** A sign in sheet that lists the type of training, location of the training, and date is signed by the trainees and the

trainer. **An Example of the training sign-in sheet is included in Appendix IX-5.**

C. Length of time records kept:
(22 CCR 66264.16(e), 66270.14(b)(12))
(40 CFR 264.16(e), 270.14(b)(12))

Training records are maintained until closure of the facility. Training records for current employees are maintained until closure of the facility except for those who leave Safety-Kleen. Records of former employees are maintained for three years from termination date. Training records are maintained in the branch's environmental filing system.

1. **Current employees: maintain records until facility closure -** See above.
2. **Former employees: maintain records for at least three years after last day employee worked -** See above.

Table IX-1. Introductory and Continuing Training

Title	Core (RCRA/Part B) Training	Initial Training	H&S Training	Continual Training
Branch General Manager (BGM)	X	X	X	X
Sales Managers and Specialists	X	X	X	X
Branch Secretary	X		X	X
Sales and Service Representative	X	X	X	X
Material Handler	X	X	X	X

APPENDIX IX-1

Example Introductory Training Outline

SPARK

Safety, Products, and Regulatory Knowledge

Course Agenda

Week 1	Week 2
Monday	**Monday**
▪ Welcome & Orientation ▪ Human resources ▪ Customer Service/Value Overview ▪ Health & Safety: *Compliance Intro, OSHA Overview, Hazard Recognition, Ergonomics, Container Handling*	▪ Oil & Vacuum Service Overview ▪ Day in the Life Scenario – Oil & Vac ▪ Spill Response
Tuesday	**Tuesday**
▪ Health & Safety Continued *Walking & Working Surfaces, Lockout/Tagout, Electrical Safety, Fire Prevention/Protection, Toxicology, Hazard Communications, PPE, Decontamination, Respiratory Protection, Hearing Protection, Medical Surveillance*	▪ Bringing It All Together: ▪ Hands-On Parts Washers & Allied Products ▪ Demonstrations, Q&A
Wednesday	**Wednesday**
▪ Transportation *Regulatory Requirements – DOT, Driver Qualification, Driver Wellness, Daily Log/Hours of Service, Load Securement, Pre & Post Trip Inspections, Vehicle Cone Program, Hazmat Definitions & Requirements, Hazard Classes, Hazmat Table, Shipping Papers, Markings and Labels, Packaging, Drum Inspection and Closure, Transportation Review*	▪ Service Representatives Selling Skills Training ▪ Sales Representatives Smith Systems® 5Keys Driver Training® Part 2: Road Training
Thursday	**Thursday**
▪ Transportation Continued: Smith Systems® 5Keys Driver Training® Part 1: Classroom Training ▪ Parts Washers/Allied Products Overview	▪ Service Representatives Smith Systems® 5Keys Driver Training® Part 2: Road Training ▪ Sales Representatives Branch Technical Training (BTT)
Friday	**Friday**
▪ Day in the Life Scenario: Parts Washers ▪ Containerized Waste Services (CWS) Overview	▪ Wrap-up, Review and Testing ▪ Awards ▪ Departure
Saturday	
▪ Day in the Life Scenario: CWS & Salvage Pack	

©2012 Safety-Kleen Systems, Inc Training Department

APPENDIX IX-2

Example Core (RCRA/Part B) Training Outline

TRAINING OUTLINE
RCRA TRAINING AT FACILITY

I. INTRODUCTION: Major plans to be discussed
   A. RCRA Contingency Plan and Preparedness and Prevention Plan
   B. Spill Plan Control and Countermeasures Plan
   C. Storm Water Pollution Prevention Plan

II. What we do to keep from sounding the alarm
   A. Storage and release prevention measures
      i. Best Management Practices
         1. Housekeeping
         2. Drum storage drum areas clean and clear
         3. Debris picked up
         4. Aisle space
         5. Container security – lids and secured
         6. Waste not stacked over 2 tiers high
      ii. Preventative maintenance
         1. Daily/weekly inspections
         2. Keeping containers closed-check container integrity at all times
         3. Spill Equipment
         4. Fire extinguishers
         5. PPE
         6. First aid kits
         7. Eye wash
      iii. Security
         1. Keep unauthorized / untrained people out of the area
         2. Use the facility sign-in log
         3. Keep doors closed and locked
         4. Enforce the above

III. What are the procedures if the above practices don't work and a spill occurs
   A. Activation of the site Contingency Plan
      i. Emergency response list
      ii. Emergency coordinators role
      iii. Response preparation
      iv. Response actions
         1. Emergency shut-off switches
         2. Major/minor spills
         3. Fires
         4. Earthquakes
         5. Evacuation procedures
      v. Notification requirements
   B. Transportation Contingency Plan
      i. Emergency response list
      ii. Response preparation
      iii. Response actions
      iv. Notification requirements

IV. Past Spills
V. Potential Spills

APPENDIX IX-3

Example of Job Descriptions

Example Job Descriptions

BRANCH GENERAL MANAGER/SERVICE CENTER MANAGER

The Branch Manager has overall responsibility for the facility operations and maintenance, and directs sales activities within a defined geographic area. He or she is responsible for the proper operations and profitability of the Service Center. The Branch Manager typically also functions as the emergency coordinator.

Responsibilities:

- Collaborate with Sales Managers to enhance branch sales performance.
- Lead the facility employees to maximize revenues and client satisfaction.
- Manage administrative and warehouse team.
- Maximize branch profitability through sales volume, margin attainment, and cost controls.
- Branch adherence to operational guidelines.
- Conduct weekly branch meetings with Route Sales and Service professionals to drive branch performance and promote teamwork.
- Protect branch business through excellent customer service.
- Manage customer service and response time through Customer Retention Management system.
- Meet with customers to validate customer expectations are being met.
- Hire, train and develop all branch employees.
- Ensure branch Environmental, Health and Safety (EHS) Compliance.
- Ensure all training and compliance documentation is maintained.

Requirements:

- Required attendance to a continuous (2) two week long on-boarding and regulatory training course that will be held out of town. Expenses (Lodging, Food, and Travel) to be paid by Safety- Kleen.
- High School diploma or GED required.
- Degree preferred.
- 7+ years of sales and operations management experience.
- Profit and Loss responsibility.
- Strong understanding of sales process.
- Lean/Six Sigma training and experience preferred.
- Working knowledge of DOT and fleet compliance.
- Experience in interviewing, hiring and effectively managing others.
- High level of computer proficiency.
- Issue resolution, negotiating and problem solving skills.
- Integrity, judgment and decision-making skills.
- Good written and oral communication skills.
- Time management, organization, and attention to detail.
- Valid Driver's License.
- Applicant must be able to successfully pass comprehensive security background screenings so as to service all SK customers who are federally regulated by TSA, DOD, DOJ, DHS, etc.

TYPICAL HAZARDOUS WASTE MANAGEMENT DUTIES

- Assures the proper completion and administration hazardous waste manifests and associated paperwork (i.e. land disposal restriction notices, operating log, waste analysis, and spill reporting)
- Assures the proper management, preparation and shipment of hazardous waste (including packaging, labeling, placarding of vehicles, and transfer and storage procedures)
- Maintains a current Emergency Response and Evacuation Plan
- Conducts safety training and maintains records of such training
- Implements and maintains branch environmental, health, and safety awareness
- Keeps environmental, health, and safety training records current
- Complies with Company and governmental regulations related to fleet operations
- Maintains facility cleanliness, organization, and appearance

Example Job Descriptions

BRANCH ADMINISTRATOR

A Branch Administrator is responsible for providing excellent customer service to internal and external customers, maintaining detailed and accurate company, branch, and customer files.

Responsibilities:

- Create proper shipping and billing documents daily, including manifests.
- Enter data into Safety-Kleen systems.
- Contact customers delinquent in payment and coordinate pick up of payments.
- Respond to customer inquiries and/or complaints.
- Enter sales leads into the Hand-Off Tool on a daily basis.
- Enter time of service Containerized Waste Service profiles into the Waste Approval Wizard software.
- Print and restock time of service in Sales and Service Representative's folders.
- Respond to customer call-ins and direct potential pulls and complaints to appropriate account owner.
- Other related support functions as directed by management.

Requirements:

- High school diploma or equivalent required
- 1+ years of work experience
- Strong computer skills
- Good organizational skills
- Customer service attitude
- Product knowledge
- Attention to detail
- Safety mindset
- Time management skills
- Sense of direction
- Integrity
- Reliable
- Problem solving abilities

TYPICAL HAZARDOUS WASTE MANAGEMENT DUTIES

- Manifest and associated paperwork preparation
- Waste Label preparation
- Maintenance of waste tracking (may be electronic or paper)
- May check container labels on hazardous waste containers stored in the facility's permitted storage areas or conduct or verify the facility inspection
- May be designated as an emergency response coordinator or alternate

Example Job Descriptions

BRANCH MATERIAL HANDLER/WAREHOUSE WORKER

A Material Handler is responsible for completing all assigned warehouse duties in a safe and responsible manner. You will work with all local, state, and federal rules and regulations; and follow all Safety-Kleen policies and procedures.

Responsibilities:

- Unload route truck containerized waste in evening and reconcile waste.
- Reload route trucks with supplies and equipment for next day's runs.
- Stock warehouse with materials after Distribution Center truck arrival.
- Prepare waste loads for shipment to Recycle Center/Distribution Center.
- Daily facility inspection.
- Empty and fill drums of solvent mineral spirits.
- Perform minor repairs on parts washers at warehouse.
- Assign job duties to Material Handlers and assure completion of the duties.
- Supervise third party bulk liquid transfers.
- Inventory count at warehouse.
- Manage inventory order and receiving process.

Requirements:

- Required attendance at on-boarding and regulatory training courses
- High school diploma or GED required
- 3+ years' work experience required
- Attention to detail needed
- Ability to follow specific instructions
- Ability to work with minimal supervision at times
- Computer skills
- Forklift driving skills
- Basic math skills
- Pride in position – owns the warehouse and recognizes the importance of this role

TYPICAL HAZARDOUS WASTE MANAGEMENT DUTIES

- Prepares hazardous waste for shipment offsite
- Performs housekeeping and routine facility maintenance
- Prepares paperwork including manifests and land disposal restrictions
- May conduct and document facility inspections
- Cleanup of minor spills and report major spills of hazardous waste
- May be designated as an emergency response coordinator or alternate

Example Job Descriptions

BRANCH SALES AND SERVICE REPRESENTATIVES

A Sales and Service Driver is responsible for safely completing all assigned customer services, meeting customer needs and selling additional services in a defined route while complying with all local, state, and federal rules and regulations, in addition to all Safety-Kleen policies and procedures.

Responsibilities:

- Complete daily scheduled services, deliveries, and pickups in a timely manner.
- Complete all required documentation and labeling.
- Generate / collect leads from customers for new products and services.
- Sell additional products and services into existing accounts.
- Actively prospect for new accounts in assigned route.
- Primary account ownership in assigned route.
- Ensure customer satisfaction at time of service.
- Follow all local, state (provincial) and federal compliance regulations and rules.
- Safely operate vehicles in accordance with U.S. DOT, local, state (provincial) and federal requirements.
- Safely observe all corporate operating guidelines and procedures.
- Observe all company environmental health and safety operating guidelines.

Requirements:

- Required attendance at on-boarding and regulatory training courses
- High school diploma or equivalent required
- Ability to obtain and retain a CDL with HAZMAT endorsement
- Demonstrate a commitment to environmental compliance and safe work practices
- Sales aptitude
- Ability to develop customer loyalty
- Record of good judgment/ decision-making
- Good written and oral communication skills
- Ability to perform physical functions per job requirements
- Ability to work independently while managing time and productivity
- Integrity and reliability
- Attention to detail
- Basic computer literacy and math skills
- Problem solving abilities
- Applicant must be able to successfully pass comprehensive security background screenings so as to service all SK customers who are federally regulated by TSA, DOD, DOJ, DHS, etc.
- Applicants for employment in the U.S. must possess work authorization which does not require sponsorship by the employer for a visa

TYPICAL HAZARDOUS WASTE MANAGEMENT DUTIES

- Services machines containing hazardous waste at customer locations
- Remove, prepare for transportation, and transport hazardous waste to the facility
- Prepares paperwork including manifests and land disposal restrictions
- May conduct and document facility inspections
- Cleanup of minor spills and report major spills of hazardous waste
- May assist in the unloading of hazardous waste and the transfer of spent solvent into the bulk storage tank

Example Job Descriptions

BRANCH SALES PERSONNEL (MARKET SALES SPECIALISTS, TERRITORY ACCOUNT MANAGER)

The Outside Sales Representative is expected to meet or exceed sales objectives within an assigned geographic territory through prescribed sales techniques; develop existing customer relationships and cultivate new account opportunities. This position is known internally as a Market Sales Specialist.

Responsibilities:

- Identify profitable new opportunities from leads provided by branches/facilities, current customers, trade publications, state associations, internet/newspaper/journal articles, or cold-calling.
- Develop customer solutions and sell all applicable Safety-Kleen products and services according to the defined sales strategy/pricing tools.
- Prepare sales plans and forecasts; monitor and track sales plan to ensure sales quota is met or exceeded.
- Prepare and deliver customer quotes and identify new solutions for customers; provide technical and sales assistance to customers.
- Serve as interface between customers and company to ensure that customer needs are met and issues are promptly resolved.
- Keep abreast of products, market conditions and competitive activities.
- Maintain current database through the use of CRM tool while providing accurate sales reporting, as required.
- Ensures that all sales actions comply with all regulations and Safety-Kleen corporate policies/processes.
- Daily local travel is required. Limited overnight travel may be required (<15%) for customer visits, vendor visits, training.

Requirements:

- 3+ years of business-to-business (B2B) sales experience, preferably in the industrial, commercial, automotive or environmental services markets
- Proven ability to prospect, negotiate and close deals
- Bachelor's Degree in Business Management or related field preferred, or equivalent additional experience required
- Prior experience using CRM software tools and reporting
- Strong time management and organizational skills to ensure focus on value-added sales activities
- Strong customer-orientation; prompt issue resolution/follow-through
- Strong computer skills (MS Applications: Word, Excel, and PowerPoint)
- Required attendance at on-boarding and regulatory training courses
- Strong communication (written and oral) skills
- Valid driver's license is required

TYPICAL/OPTIONAL HAZARDOUS WASTE MANAGEMENT DUTIES

- Prepares hazardous waste for shipment offsite
- Performs housekeeping and routine facility maintenance
- Prepares paperwork including manifests and land disposal restrictions
- May conduct and document facility inspections
- Cleanup of minor spills and report major spills of hazardous waste
- May be designated as an emergency response coordinator or alternate

APPENDIX IX-4

Example Training Matrix

Safety-Kleen Systems, Inc.,
Example Training Matrix

Course #	Course Title	Manager Customer Service	Branch Manager SK	Sales and Service Rep	Vac Sales and Service Rep	Oil Sales and Service Rep	Frequency*
MT2030	Clean Harbors Overview	•	•	•	•	•	
MT2065	Search & Inspection Policy EMP	•	•	•	•	•	
MT2075	Electronic Comm & Email Policy	•	•	•	•	•	
MT3012	CustomerNOW	•	•	•	•	•	
MT3201	Social Media Policy	•	•	•	•	•	
CA1002	Ethics	•	•	•	•	•	
VID300	Safety 3-6-5	•	•	•	•	•	
EV0244	Fatigue Management	•	•	•	•	•	
MT1165	Alcohol & Drug-Free Workplace (Employees)			•	•	•	
SSWK01-20	Start Safe weeks 1-20	•	•	•	•	•	
ED500	SPARK Training	•	•	•	•	•	
CS204	Point of Service Checklist	•	•	•	•	•	
CS3160	Container Management Training	•	•	•	•	•	
ED102	EE Handbook Code of Conduct US	•	•	•	•	•	
ED13EM	Prev Workplace Harassment EMP			•	•	•	
ED3015	Branch SOP Class 15 Reps			•	•	•	
ED3016	Branch SOP Class 16 Reps			•	•	•	
ED3017	Branch SOP Class 17 Reps			•	•	•	
ED3018	Branch SOP Class 18 Reps			•	•	•	
ED3019	Branch SOP Class 19 Reps			•	•	•	
ED30HH	Handheld Usage SOP	•		•	•	•	
ET010	CSA 2010	•	•	•	•	•	
ET1002	ISO / EMS Overview	•	•	•	•	•	
ET140	RCRA SK Site Specific Training	•	•	•	•	•	annual
ET177A	PatriotAct-Emp-HazMat Security	•	•	•	•	•	3 years
ET2094	Placarding	•	•	•	•	•	
ET237	Drum Inspection & Closure	•	•	•			
HS1050	10 - Fall Protection	•	•	•	•	•	
HS2100	OSHA 24 Hour Hazwoper	•	•	•	•	•	
HS4010	Bonding & Grounding	•	•	•	•	•	
HS4055	Lockout/Tagout Affected	•	•	•	•	•	
HS6010	Cold Stress	•	•	•	•	•	
HS6015	Heat Stress	•	•	•	•	•	
HS6040	Personal Protection Equipment	•	•	•	•	•	

Course #	Course Title	Manager Customer Service	Branch Manager SK	Sales and Service Rep	Vac Sales and Service Rep	Oil Sales and Service Rep	Frequency*
HS6071	Quantitative Fit Test	•		•			annual
HS6301	1 of 8 Globally Harm Sys (GHS)	•	•	•	•	•	annual
HS6302	2 of 8 Medical/Bloodborne	•	•	•	•	•	annual
HS6303	3 of 8 Respiratory Protection	•	•	•	•	•	annual
HS6304	4 of 8 Conf Space/Heat Stress	•	•	•	•	•	annual
HS6305	5 of 8 Pers Prot Equip/Hearing	•	•	•	•	•	annual
HS6306	6 of 8 Decontamination Proc	•	•	•	•	•	annual
HS6307	7 of 8 Emergency Response	•	•	•	•	•	annual
HS6308	8 of 8 Drum/Material Handling	•	•	•	•	•	annual
HS5020	Lockout/Tagout Authorized	•	•				
HS7003	Pressure Washing	•	•		•		
PT261	FluidKleen Filtration Unit	•	•	•			
PT267	Recycling PW Service with Oil	•	•	•			
SA2035	National Drum Launch -Lube Oil	•	•	•	•	•	
TE123	Kronos Time Entry System Train	•	•	•	•	•	
VID062	SKOS SKVS Field Testing	•	•		•	•	
M41005	Oil Collection Procedures (SK)	•	•			•	
M41008	Do-It-Yourself (DIY) Procedure	•	•			•	
HS1051	Ergonomics	•	•	•	•	•	
ET1500	Cargo Tank Training				•	•	
ET171	Cargo Tank Ops Refresher				•	•	3 years
	DQ file			•	•	•	
ET5035	Zurich Defensive Driver - Business						2 years
ET5040	Zurich Defensive Driver - Commercial			•	•	•	2 years
ET2002	DOT Regulation Haz Mat Empl.	•	•	•	•	•	3 years
ET2004	Fed Motor/CH Policies and Proc			•	•	•	
ET2120	A&D Testing Drivers NeedtoKnow			•	•	•	
ET4021	Transpor Security Aware Online			•	•	•	
ET5025	Vehicle Inspection			•	•	•	
ET5017	Management of Used Oil	•	•				
HS0010	H&S Admin Personnel	•	•				
MT4025	DVIR Entry WIN	•	•				
O21001	Customer Manifest Inform Chang	•	•				
O21002	Req for Gen EPAID # & Manifest	•	•				
O21008	Comp Dist Uniform Hazwaste Man	•	•				
O22008	Signing Regulatory Documents	•	•	•	•	•	
O32003	Cust Core Waste Class Change	•	•				

Course #	Course Title	Manager Customer Service	Branch Manager SK	Sales and Service Rep	Vac Sales and Service Rep	Oil Sales and Service Rep	Frequency*
O43002	SK Spill Response Procedure	•	•	•	•	•	
CS1033	Managing Lithium Batt Off Spec	•	•				
CS2516	Cust Ed Prof Dealership (Auto)	•	•				
CS2517	Cust Ed Food & Kindred Custmrs	•	•				
CS2518	Cust Ed Dlrshp Recreat&Machin	•	•				
SA2025	Safety Kleen Profile Tool	•	•				
SA2035	National Drum Launch -Lube Oil		•				
CS2513	Cust. Ed. Profile Machine Mfg	•	•				
CS2514	Cust. Ed. Profile Truck_Trans	•	•				
ET6001	Waste Minimization Program	•	•				
M13001	Mgt Product Changes Procedures	•					
M92003	US Postal Service Program	•	•				
O32012	Variance to Corporate BOGs	•					
O42003	Notif Serious Accident/Injury	•	•				
SS3249	Equip Maintenance&Calibration	•	•				
VID301	Live It 3-6-5 CH Kids Safety	•	•	•	•	•	
VID302	New Emp CEO Safety Message	•	•	•	•	•	
HS4090	Hot Work Training Affected	•	•				
HS4095	Hot Work Authorized Training	•	•				
HS6085	Electrical Safety	•	•				
MT1666	Alcohol & Drug-Free Workplace (Supervisors/Managers)	•	•				
EX2020	IATA External Training		•				2 years
MT5005	Positive Employ Relations 2016	•	•				
MGMT11	Behavioral Training MGR/SUP	•	•				
MT2070	Search & Inspection Policy SUP	•	•				
ED13MG	Preventing Workplace Harrassment (Managers)	•	•				
ET177B	PatriotAct-Sup-HazMat Security	•	•				3 years
ET2125	Reasonable Suspicion TestngSup	•	•				
CS1000	Beacon Overview	•	•				
CS3000	Beacon 1 - Create/Edit Company	•	•				
CS3005	Beacon 2 - Searching	•	•				
CS3010	Beacon 3 - Contacts	•	•				
CS3015	Beacon 4 - Preferences/Messenger	•	•				
CS3020	Beacon 5 - Account Reviews	•	•				
CS3025	Beacon 6 - Pipelines	•	•				
CS3030	Beacon 7 - Call Notes	•	•				
CS3035	Beacon 8 - Credit/Collections	•	•				

Course #	Course Title	Manager Customer Service	Branch Manager SK	Sales and Service Rep	Vac Sales and Service Rep	Oil Sales and Service Rep	Frequency*
CS3040	Beacon 9 - Invoiced/Open Orders	•	•				
CS3050	Beacon 11 - Reports	•	•				
CS3055	Beacon 12 - Task Manager	•	•				
CS3060	Beacon 13 - Instructions - Alerts	•	•				
MT3009	Trip & Dispatch Management in WIN	•	•				
MT4001	Asset Mgmt Program Overview	•	•				
MT4005	Assets Requiring Attention	•	•				
MT4010	My Assets	•	•				
MT4015	Short Term Rental	•	•				
MT4020	Permit and Registrations	•	•				
MT4025	DVIR Entry WIN	•	•				
MT6002	Compliance Calendar	•	•				
MT6004	Incident Management Workbench	•	•				
MT6009	Off-C Workbench	•	•				
ET3050	Annual RCRA Training	•	•	•	•	•	annual
HC1080	CPR & First Aid (Biennial)	•	•				2 years
SS2035	SPCC Training	•	•	•	•	•	annual
CS3075	PeopleSoft Expense	•	•				
MT1470	PeopleSoft AP PO Vouchering	•	•				
MT1480	PeopleSoft AP PO Creation	•	•				
MT1485	Open Vendor PO Workbench Exam	•	•				
MT1550	PeopleSoft Inventory Overview	•	•				
MT1552	PeopleSoft Inventory Mgmt	•	•				
MT1554	Peoplesoft Inventory Count	•	•				
MT3020	PSHR Training Entry/Reporting	•	•				

* One time unless noted.

SAFETY-KLEEN CORP.
TRAINING ATTENDANCE /CERTIFICATION SHEET

Course Code: ET_140 ETTS Class Number: ET-140
Course Name: RCRA, EMS, Contingency Plan, SPCC Plan, Storm water
Location: Date:
City, State: Time:
Duration:

	PRINTED NAME	SIGNATURE	EMPLOYEE ID #	FACILITY NUMBER (3-digit) AND NAME
1.				
2.				
3.				
4.				
5.				
6.				
7.				
8.				
9.				
10.				
11.				
12.				
13.				
14.				
15.				
16.				
17.				
18.				
19.				
20.				

The above listed employees have demonstrated satisfactory performance and comprehension of the course named above.

Trainers: _____ Trainers Signature: _____
(Please Print)

_____ _____
(Please Print)

Trainer(s) Facility: _____

Page ___ of ___

ATTENDANCE SHEET CHECKLIST

PART X
CONTINGENCY PLAN AND EMERGENCY PROCEDURES

X. CONTINGENCY PLAN AND EMERGENCY PROCEDURES

Preparedness and Prevention

A. Location, design and operation of the facility (22 CCR 66264.18(b), 66264.25(a) and (b), 66264.31, 66270.14(b)(19)) (40 CFR 264.18(b), 264.31)

1. Located, designed, constructed, maintained, and operated to minimize emergency situations (22 CCR 66264.31) (40 CFR 264.31)

The facility has been designed and constructed to operate in a manner so as to minimize the likelihood of emergency situations and prevent releases.

Underground storage tank - There is one underground storage tank (UST) at the facility used for storage of spent parts washer solvent (Petroleum- or aqueous-based). The tank is double-walled and has a leak detector between the wall to detect any possible leak from the primary containment. The tank has fiberglass coating to minimize corrosion. The tank was inspected and pressure tested prior to installation. An independent registered professional engineer certified proper installation. The tank and its associated appurtenances are inspected each operating day by trained employees. High level alarm provides a warning of potential overfilling of the tank. There is the second UST utilized for storage of product.

Container Storage Area - The container storage areas are constructed with adequate secondary containment. Containers of hazardous waste are stored in the secondary containment area and are kept closed at all times, except when testing or adding or removing waste for waste generated onsite. Containers of spent parts washer solvent are also opened to empty contents into the drum washer unit(s) in the return/fill station. The container storage area is inspected each operating day by trained employees as part of facility inspection procedures.

Drum Washer Units - Drum washer units are located inside the Return/Fill area. Safety-Kleen's inspection requires that the tank level and all connections (including transfer pumps, hoses, piping, and joints) are inspected each operating day for signs of leakage or deterioration. When petroleum-based parts washer is stored in any tank, procedures implemented in accordance with Subpart BB regulatory requirements help prevent and/or detect air emissions from these units. Example of Subpart BB inspection checklist, and Repair log for the tank system is included in Appendix X-1. Inspections may be conducted electronically or on paper.

2. Facilities located in 100-year floodplain or maximum high tide: (22 CCR 66264.18(b))

(40 CFR 264.18(b))

a. Designed, constructed, maintained, and operated to avoid releases due to floods or high tides, <u>or</u>
b. Procedures to ensure wastes will be safely removed to non-flood area before flood/tide waters reach facility

The facility is not located in a 100-year flood plain.

In the event of a significant flood; containers located in the container storage area that may be exposed to flood water will be loaded on trucks and delivered to a permitted facility that is not subject to flood conditions

3. Facility, cover systems and drainage systems designed to withstand capacity hydrostatic and hydrodynamic loads due to 24-hour probable maximum storm
(22 CCR 66264.25(a))

The facility drainage system design meets local regulations and will withstand hydrostatic and hydrodynamic loads due to 24-hour probable maximum storm. Storm water is directed off of the facility by a northern slope that leads to Worthen Avenue.

4. Surface impoundments, waste piles, landfills, land treatment units, cover systems and containment/control devices designed, constructed, and maintained to withstand maximum credible earthquake
(22 CCR 66264.25(b))

This facility does not have any surface impoundments, waste piles, landfills, land treatment units, or cover systems or containment/control devices that will remain after closure at a permanent hazardous waste disposal area; therefore, this section is not applicable.

B. Required Equipment
(22 CCR 66264.14, 66264.32, 66264.52, 66270.14(b)(4), (b)(6), (b)(8), and (b)(19))
(40 CFR 264.14, 264.32, 264.52, 270.14(b)(4), (b)(6), and (b)(8))

Section B, below, describes type and minimum quantity of emergency and safety equipment at the facility. List of Emergency Equipment is included in Appendix X-2. Emergency evacuation routs, and location of emergency equipment are shown on Figures X-1, and X-2, respectively.

Fire extinguishing system – Four 45-Pond dry chemical fire extinguishers are located in storage area, Unit "C." Also, at least 10 ABC type, 10-pound fire extinguisher are available at the facility. Fire extinguishes locations are shown on Figure X-2.

1. **Spill control equipment -** Ab**s**orbent sheets or pads (3M type 151 or equivalent) are kept in the emergency equipment storage area and are standard stock items in the warehouse for absorbing spills. These pads are used to clean spills in areas that are not accessible with the wet/dry vacuum or portable pump. Other available equipment used to clean up spills are:

   - Mop and bucket
   - Portable pump (spark-protected)
   - Wet/dry vacuum (spark-protected)

   The location of spill control equipment is shown on Figure X-2.

2. **Emergency Communication Equipment –**

   Internal-Telephones are used throughout the facility (see Figure X-2).

   External- A telephone is equipped with a public address (PA) system. Telephones that can access outside lines are shown on the facility Emergency Equipment and Communication Plan (Figure X-2). The nearest off-site telephone is located at adjacent businesses.

4. **Alarm systems –** In addition to the "Panic Button" located at the Return & Fill, a PA system is available as a warning and alarm system for communication with employees. The UST systems are equipped with high level alarms to prevent overflow.

5. **Decontamination equipment -** Small equipment items (such as mop, bucket, shovel, portable pump, wet/dry vacuum tank and hose) will be washed in an unused, empty drum, which will be used to contain the rinsate. The rinsate will be handled as a hazardous waste. When structures such as floors are being decontaminated as the final step in spill cleanup, the decontamination solution will be contained by constructing a berm around the affected area using absorbent pads. Spent solution will be pumped into a container using the portable pump, or picked up with the wet/dry vacuum. Reusable personal protective equipment, such as respirators and boots, will be decontaminated following spill cleanup in an unused empty container. Spent decontamination solutions will be drummed and managed as hazardous waste. A box of soap or other equivalent cleaner is available in the emergency storage area for decontamination. The used absorbent pads and other disposable equipment are stored in containers, and managed and disposed of as hazardous waste.

6. **Emergency equipment description** – Sections B.1 to B.5 above describe emergency equipment type and quantities. Figure X-2 shows the location of the emergency equipment.

7. **Adequate water volume and pressure to operate equipment-** No equipment at the facility operates with Water. There is no sprinkler system at the facility. Dry chemical and ABC type fire extinguishers are primarily used for extinguishing fires

8. **Artificial lighting for night operations and emergency situations:**

   a. **Types**
   The facility has been designed with a 24-hour wall-mounted outdoor flood lighting system for both safety and security. Also, there are solar and battery-powered "Exit" signs throughout the facility.

   b. **Locations**
   The outdoor lights are mounted on walls around the facility. The "Exit" signs are mounted on each egress location.

9. **Justification, if exemption to equipment requirements is requested -** No exemption to equipment requirements is requested; therefore, this section is not applicable.

C. Testing and Maintenance
(22 CCR 66264.33, 66270.14(b)(5) and (b)(19))
(40 CFR 264.33, 270.14(b)(5))

1. **Procedures -** Per manufacturers' instructions.

2. **Frequency -** Refer to Section X.C.3 below.

3. **Equipment to be tested/maintained**

   Emergency equipment and communication systems will be maintained and tested in accordance with manufacturers' specifications and will be repaired or replaced in a timely manner. All facility communications, fire protection equipment, spill control equipment, and decontamination equipment will be inspected, maintained, and tested according to the schedule shown in Table X-1 to ensure their proper operation in time of emergency.

   Deficiencies noted during the inspection and testing of equipment will be noted in the inspection log and corrected in a timely manner by the Operations Facility Manager (or designee). Supplies of consumable safety materials are reordered as necessary to ensure that adequate supplies of materials are always available.

D. Access to Communications Devices or Alarms
(22 CCR 66264.34, 66270.14(b)(19))
(40 CFR 264.34)

As shown in Figure 10-1, telephones are located in the main office and in the warehouse and are fully accessible to all employees. The nearest offsite phones are located at adjacent businesses.

E. Required Aisle Space
(22 CCR 66264.35, 66270.14(b)(6) and (b)(19))
(40 CFR 264.35, 270.14(b)(6))

1. **Aisle space sufficient to allow unobstructed movement of emergency equipment and personnel is provided. Specify:**

   a. **Height of aisles -** Aisle height will be unobstructed to the ceiling of the facility (approximately 16 feet) or to the mezzanine height (approximately 8-12 feet).

   b. **Width of aisles -** A minimum aisle space of 30 inches between groups of drums will be maintained, allowing unobstructed movement of emergency equipment and personnel.

2. **Demonstration that aisle space is not required -** A demonstration that aisle space is not required is not requested; therefore, this section is not applicable.

F. Arrangements with local authorities
(22 CCR 66264.37, 66264.52(c), 66270.14(b)(7) and (b)(19))
(40 CFR 264.37, 264.52(c), 270.14(b)(7))

1. **Describe/document arrangements to familiarize local authorities and hospitals with facility layout, water properties and hazards, and evacuation routes**

   Safety-Kleen provided notification to the Police Department, Fire Department, and a local hospital, by providing a copy of the facility Contingency Plan so that they become familiar with the layout of the facility, properties of hazardous materials handled (Material Safety Data Sheets) at the facility and associated hazards, places where the facility personnel would normally be working, entrances to and roads inside the facility, and possible evacuation routes.

   The emergency coordinator is responsible for notifying the appropriate emergency authorities. Emergency authority will then be determined by those agencies responding to an emergency (generally the Sheriff or Police and Fire Department).

Potential primary and secondary spill control contractors as well as absorbent suppliers are identified in the Contingency Plan and Emergency Procedures. These firms have been contacted to provide required services in the event of an emergency.

Notification will be provided to familiarize the local hospital with the properties of hazardous waste handled at the facility and the types of injuries or illnesses which would result from fires, explosions, or releases at the facility.

2. **Include copies of agreements with local/state authorities -** Documentation of agreements or attempts to familiarize local authorities for emergency response in the event of an incident where public health or the environment is threatened are included in Appendix X-3.

   Approval will be sought from or notice given to DTSC Region 1 (or designated Region) when modifications to the Contingency Plan are required.

3. **Documentation of non-agreement -** If applicable, any non-agreements will be documented in the Facility Operating record. In incidents of non-agreement, meetings between Safety-Kleen and the non-agreeing agency will be set up to resolve pertinent issues. To date, there have been no incidents of non-agreement with agencies.

G. General Hazard Prevention

1. Identify possible loading and unloading hazards and document steps to minimize or eliminate these hazards (22 CCR 66270.14(b)(8)(A)) (40 CFR 270.14(b)(8)(i))

Loading and unloading of containers occurs between the route trucks and the return and fill station and between the route trucks and the container storage area. During movement of containers, there is a possibility that a container tips over or is dropped. To minimize the possibility of spills under those conditions:

- Containers are kept closed during loading and unloading operations
- Route trucks are equipped with a lift to raise and lower container pallets
- Forklifts and pallet jacks are used to transport containers
- The container storage area is designed with adequate secondary containment including containment trenches
- The Return and Fill Station is designed with a loading dock that has secondary containment.

2. Describe mechanisms to prevent runoff and flooding (22 CCR 66270.14(b)(8)(9))

(40 CFR 270.14(b)(8)(ii))

Runoff from and flooding of hazardous waste handling areas is prevented because the waste handling areas have containment berms and are inside covered areas. There are also a trench to contain any possible release and preventing runoff to uncontained area outside the warehouse.

3. **Describe mechanisms to prevent contamination of water supplies**
   (22 CCR 66270.14(b)(8)(C))
   (40 CFR 270.14(b)(8)(iii))

   Water supplies are protected with a backflow protection device at the service connection.

4. **Identify hazards of and describe procedures, structures, equipment and devices to mitigate effects of equipment failures and power outages**
   (22 CCR 66270.14(b)(8)(D))
   (40 CFR 270.14(b)(8)(iv))

   In the event of a power outage, Safety-Kleen will immediately cease all hazardous waste handling activities and secure the facility, thus the effects of a power outage and/or equipment failure will be mitigated.

5. **Personnel protection mechanisms**
   (22 CCR 66270.14(b)(8)(E))
   (40 CFR 270.14(b)(8)(v))

   All Safety-Kleen personnel involved with the loading, unloading, or transport of hazardous waste are protected by rubber gloves, safety glasses or face shield, and steel-toed rubber soled boots. Generally, the solvent sediment is removed from the drum washer unit by a hand-held scoop shovel. Employees are provided with the basic protective equipment discussed above plus half-face respirators with organic vapor cartridges. The drum washer units are located in the return/fill area, which is located adjacent to the container storage area. The return/fill area is open on one side, which provides ventilation to the outdoors.

6. **Mechanisms to minimize releases to the atmosphere**
   (22 CCR 66270.14(b)(19))
   (40 CFR 270.14(b)(8)(vi))

   The wastes are prevented from dispersal by adequate containment measures in all handling areas. All containers placed in container storage areas are sealed with lids secured by lock rings. The container storage area has secondary containment provided by

berms, a sloped floor, and a collection trench. Secondary containment is provided at the drum washer units through the use of a sloped concrete floor and trench under the units.

All containerized wastes remain covered with the lock ring in place during all storage and transportation processes at the facility. Wastes stored in tanks are removed for recycling via flexible hoses connected with "quick disconnect" couplings to a tanker or truck. The tanks are vented in accordance with NFPA standards, and there are no open tanks at the facility. Spent parts washer solvent is emptied into the drum washer unit, which is quickly pumped into the tank. The used solvent collection part of the drum washer unit is covered when not in use. Employees are trained to respond to minor releases.

If a spill does occur, the amount of solvent in the containers is normally a quantity which can be collected with sorbent clay or pads. Any contaminated soil that results from a spill will be removed manually, drummed, and shipped to a Safety-Kleen recycle center or proper disposal facility.

7. Hazards associated with ignitable, reactive, and incompatible wastes
(22 CCR 66264.17, 66264.176, 66264.177, 66264.198, 66264.199, 66270.14(b)(9), 66270.15(b) and (c), 66270.16(j))
(40 CFR 264.17, 264.176, 264.177, 264.98, 264.198, 270.14(b)(9), 270.15(c) and (d), 270.16(j))

a. Describe procedures to prevent accidental ignition or reaction of wastes - Safety-Kleen maintains the physical separation of wastes from heat sources. In addition, accidental ignitions are prevented by implementing the following:

- Containers are kept closed unless they are actively being emptied or filled.
- Equipment in the vicinity of flammable vapors has the proper electrical classification for electrical equipment per NFPA 70, National Electric Code.
- Mineral spirits parts washer solvent has an additive to improve its conductivity to minimize the chance of ignition due to static electricity.
- The return and fill area is grounded to minimize any stay currents or the build-up of static electricity.
- The grating on the return and fill is steel which is conductive and should essentially ground all drums to minimize the possibility of static electricity.
- Trucks grounded prior to mineral spirits transfer.
- Tanks are equipped with high level alarms to prevent overflows.

- There is no smoking allowed in the area. "No Smoking" signs are posted in appropriate places throughout the facility.
- Containerized ignitable wastes are stored in the drum storage area, which is totally enclosed with walls, roof, and concrete floor with secondary containment.
- The underground tank used for waste solvent storage meets the combustible classification Class II of the NFPA Code 30.
- Safety-Kleen does not handle reactive wastes.

b. **Describe procedures to prevent accidental mixing of incompatible wastes -** Safety-Kleen does not handle any incompatible wastes; therefore, this section is not applicable.

c. **Document adequacy of these procedures -** The procedures described above have been implemented for all other Safety-Kleen facilities in California and have proved adequate.

d. **Demonstrate that containers holding ignitable or reactive wastes are located at least 50 feet from the facility property line -** Containers holding ignitable wastes are stored in the container storage room, which is more than 50 feet from the facility property line. Safety-Kleen does not handle any reactive wastes.

e. **Demonstrate that the NFPA-required protective distances are provided around tank systems containing ignitable or reactive wastes -** Tanks that store ignitable wastes meet the combustible classification Class II of the NFPA code. The tanks are underground and comply with NFPA-30 setback requirements.

8. **Demonstrate compliance with the Uniform Fire Code, including (22 CCR 66270.14(b)(19))**

a. **Flammable liquids stored inside a building or under a roof:**

1. **Drums storing flammable liquids may not be stacked, if stored in a room (i.e., an inside space) not applicable if stored in a building where only flammables are stored -** Flammable materials are stored inside a room rated for storage of flammable. Four 45-pound dry chemical fire extinguishers are installed in that room.

2. **Secondary containment, with adequate capacity to collect and hold a 20-minute discharge from the sprinkler system, must be provided –** N/A

3. **Water-reactive wastes and materials must be stored separately from flammable liquids -** Safety-Kleen does not handle water-reactive wastes or materials and therefore this section is not applicable.

b. **Incompatible wastes must be stored:**

1. **Using non-combustible partitions to separate incompatible wastes, which extend 18 inches above and 18 inches to the sides of the containers, or**

2. **In separate cabinets (for small containers), or**

3. **Not less than 20 feet from one another** Safety-Kleen does Incompatible wastes are stored 20 feet from each other.

c. **Maximum travel distance to a fire extinguisher must not exceed:**

1. **75 feet, for Class A fires (wood, paper), or**
2. **50 feet, for Class B fires (flammable liquids)-**Fire extinguishers are located at not less than 50 feet from all portions of the facility.

d. **Other applicable UFC requirements-** Safety-Kleen will comply with any other applicable UFC requirements.

H. Purpose and Implementation of Contingency plan (22 CCR 66264.51, 66264.52(a), 66264.53(b), 66264.56(d), 66270.14(b)(7)) (40 CFR 2645.51, 264.52(a), 264.53(b), 624.56(d), 270.14(b)(7))

1. Include copy of written contingency plan

This contingency plan and emergency procedures describe the actions expected of each employee in the event of fire or other emergency, and are designed to ensure that the Safety-Kleen Service Center in Los Angeles, California is prepared to address emergency situations rapidly and in such a manner as to prevent or minimize hazards to human health or the environment from fire, explosion, or any unplanned sudden or non-sudden release of hazardous material or waste to the air, soil, surface water, or groundwater at the facility. An updated Contingency Plan will be provided to DTSC, and local authorities whenever there are changes to the facility or the Contingency Plan. Note that responses to minor incidents (i.e., small spills), will not require implementation of the Contingency Plan. Response to small spills is addressed in Section 6 above. A small spill is defined, for purposes of this part, as a spill of less than 10 gallons that is not released to soil, and that can be totally cleaned up immediately.

Description of the Facility and Wastes - The Safety-Kleen Los Angeles Service Center provides solvent and parts cleaning service and solvent collection and reclamation services to its customers who are primarily engaged in automotive repair, industrial maintenance, and dry cleaning. The facility has one underground waste storage tank, two container storage areas, and a return/fill area. The services that the facility provides to its customers, and the wastes types that result from these services are:

- Spent parts washer solvent (petroleum- and aqueous-based)
- Spent immersion cleaner
- Dry cleaning wastes (perchloroethylene)
- Spent antifreeze/glycols
- Used oil
- Paint wastes/lacquer thinners
- Waste oil (drained used oil filters)
- Safety-Kleen generated wastes

2. **Conditions and procedures to trigger contingency plan implementation**

   The provisions of the contingency plan are carried out immediately whenever there is a fire, explosion, or release of hazardous materials or waste that could threaten human health or the environment. The procedures contained in this plan describe the actions facility personnel will take in response to an emergency.

I. Contents of Contingency Plan (22 CCR 66264.52, 66264.55, 66264.56, 66264.227(b), 66270.14(b)(7) and (b)(19)) (40 CFR 264.52, 264.55, 264.56, 270.14(b)(7))

Response actions to be taken in specific emergency situations are described in the sections that follow. Materials, which result from a fire, release, or explosion will be containerized and managed as a hazardous waste unless sampled and analyzed and shown to be non-hazardous. If free liquid exceeds 500 gallons, it will be transported in a truck to a Safety-Kleen recycle center. If free liquid is less than 500 gallons, then it will be in containers stored in the container storage area and transported off site with other containers. Depending on the solvent content, the waste will either be reclaimed or disposed of at a permitted facility. All cleanup equipment will be thoroughly decontaminated with type 666 soap (or equivalent) and rinsed with clean water for approximately 5 minutes before it is put back into storage in the emergency equipment storage area, or it will be disposed of as hazardous waste if it cannot be decontaminated. The equipment is inspected weekly to determine that it is clean and fit for its intended use. In the event of an emergency response, all personnel involved will wear proper protective devices in relation to the situation.

1. Response to fires

If a small fire occurs, facility personnel will use a fire extinguisher to extinguish the fire. If the fire cannot be extinguished in this way, the facility will be evacuated, and the Fire Department will be called to respond to the fire. Procedures for fire response are as follows:

The first person at the scene will:

- Use fire extinguisher to extinguish fire
- If fire cannot be extinguished or if large amounts of smoke, vapors, or strong odors are present, notify emergency coordinator to begin evacuation procedures
- Emergency coordinator will call Fire Department from offsite phone to respond to fire.

Upon arrival of the Fire Department, the emergency coordinator will describe the nature of the emergency to the Fire Department. The following information and procedures are provided to assist the local responding agency:

Parts washer solvents, either product or waste, is combustible liquid with a flash point of 15o^{o}F. The parts washer solvent fire can best be extinguished with foam. If foam is not available, sweeping the fire with water fog can cool it, directing the water spray to push the flames into a confined area, if possible. **The flame should not be extinguished until the flow of the solvent has been stopped.** Attention should then be directed immediately to extinguishing the flame.

Paint waste/lacquer thinner are flammable and should be handled as described above for parts washer solvent.

Immersion cleaner and dry-cleaning wastes (perchloroethylene) are not ignitable or flammable but can produce phosgene gas and hydrochloric acid at very high temperatures (about 1200°F). Parts washer solvent, spent antifreeze, and immersion cleaner can generate carbon monoxide and other gases when exposed to heat. The following procedures should be followed by the responding local authorities:

- Isolate the hazard area and deny entry to unauthorized personnel
- Stay upwind; keep out of low areas
- Ventilate closed spaces before entering them
- Wear positive pressure breathing apparatus and protective clothing
- Evacuate an adequate area to minimize risks from exposure to toxic gases produced by the fire.

A fire in the container storage area can best be extinguished by foam, water fog, or water spray. All containers, equipment, and the surrounding area must be extinguished, cooled, and integrity checked to ensure that

fires, explosions, or releases do not occur, re-occur, or spread to other parts of the facility containing hazardous waste.

2. Response to explosions

If an explosion has occurred at the facility, or if an explosion is imminent, the emergency coordinator will evacuate the facility and notify the Fire Department. As shown on the facility evacuation plan, employees will meet at a safe area of the facility, and the emergency coordinator will account for all employees and notify the Fire Department of any unaccounted employees. In addition, the facility perimeter will be inspected from a safe distance for releases and spill response performed if it can be done safely.

The following information is provided to assist the local responding agency:

Parts washer solvent is a combustible liquid with a flash point of 150ºF. Dry cleaning wastes are not flammable but can produce phosgene gas and hydrochloric acid at very high temperatures (1200ºF). Spent parts washer solvent, spent antifreeze, and immersion cleaner can generate carbon monoxide and other poisonous gases when exposed to heat.

3. Response to injuries

In the event of an injury, the first person arriving at the scene will assess the injury and notify the emergency coordinator. First aid will be administered as appropriate. The emergency coordinator will notify and request ambulance service if the injury cannot be treated onsite.

The emergency coordinator shall be responsible for completing an accident investigation and performing corrective action if necessary.

4. Response to hostage situations

In the unlikely event of a hostage situation, all employees not involved in the situation will evacuate the facility and meet at the rally point. From an off-site phone, notify the local police department. Upon arrival of the police, a spokesperson shall accurately describe the situation including a list of employees unaccounted for.

5. Response to sudden and non-sudden releases to:

a) Groundwater - Should a release of hazardous materials be suspected of entering groundwater, Safety-Kleen will initiate environmental remediation and notify appropriate regulatory agencies including but not limited to the DTSC and the Regional Water Quality Control Board (RWQCB). Remedial measures may include pumping and treating affected groundwater, or a host of

other available technologies. Specific emergency response procedures are described

b) **Surface water -** Although extremely unlikely due to the distance of the facility from a surface water body, should a release of hazardous materials enter a surface water body, the emergency coordinator will be notified, and appropriate regulatory agencies and municipal entities will be alerted. The first priority of on-site personnel will be to stop the release of material to the surface water body and then assist in implementation of cleanup with hazardous materials response teams through their knowledge of the waste stream. Specific emergency response procedures are described below.

c) **Soil -** Generally, spills will be totally contained on the concrete surface and in the containment system. The procedures for removal of contaminated soil will depend on the size of the affected area. Spills affecting a few cubic yards of soil will be excavated suing hand tools (shovels, picks, etc.) and the soil placed in 55-gallon containers. When the affected soil is no longer visible from the sidewalls and the bottom of the excavation, confirmatory soil samples will be collected for laboratory analysis. A number of samples taken will be based on SW-846 criteria. Also, blank and background samples will be collected and analyzed. Samples will be analyzed for the constituents of the material involved in the spill using approved analytical methods. Once confirming that the soil removal is complete, the excavation will be backfilled with clean soil or another fill material.

   Spills involving more than a few cubic yards of contaminated soil will be cleaned up using a backhoe or other suitable equipment (depending on facility-specific access constraints). The extent of soil contamination may be evaluated prior to excavation by collecting and analyzing soil samples using methodology approved for facility closure. Excavated soil will be placed in covered bulk container (typically 10 to 20 cubic yards). Once excavation is completed, verification samples will be collected and analyzed as described above before the excavation is backfilled.

   Contaminated soil will be transported to a permitted hazardous waste disposal facility by a registered hazardous waste hauler.

d) **Air -** A release to air will require notification of the emergency coordinator who will notify appropriate regulatory agencies and municipal entities, if warranted. As in all releases, on-site personnel should stop the release in a safe manner, if possible. Safety-Kleen will identify the released material to assist emergency response personnel in assessing potential evacuation of nearby businesses and residents. Specific details of emergency response procedures are detailed below.

General Spill Response Procedures - The emergency coordinator will be notified as soon as a spill occurs. Employees cleaning up spills will wear the appropriate personal protective equipment: (such as boots, gloves, coverall, half mask respirator with face shield or full face respirator). MSDSs for all products handled at the facility indicate that respirators are adequate protection for small spills. Disposable personal protective equipment and contaminated absorbent materials will be drummed and managed and disposed as hazardous waste. All other non-disposable contaminated items including floors and other structures in the spill area will be rinsed with a detergent solution to remove any residual contamination. The rinsate will be properly contained and disposed of as hazardous waste. The cleanup is complete once the workers have decontaminated themselves, any affected areas, and all emergency equipment.

Minor Spills - The following is a list of activities that have the potential for a small spill of less than 55 gallons, for which outside cleanup assistance is not needed; however, notification to California DTSC, California OES, and EPA will be made, and the procedures for cleanup of such spills. Note that procedures for small spills (less than 10 gallons that is not released to soil and that can be cleaned up quickly and totally) are in Appendix X-4. A sample list of emergency equipment available and its capabilities is presented in Appendix VIII-3.

Activity 1: Pouring hazardous waste (used solvent) into a drum washer - As the small containers (16 and 30 gallons) are poured into the drum washer, used solvent has the potential to splash out. Employee training emphasizes the importance of being careful when emptying the containers. Curbing around the drum washer units will contain a small spill of used solvent.

Response Action 1 - The employee will immediately inspect the area around the drum washer unit to check whether the spill is contained within the secondary containment pans. Absorbent pads will be applied to the spilled material and will be placed in a 55-gallon container. If material has spilled outside the pans, absorbent pads will be used to construct a dike to contain the material, and a portable pump or wet/dry vacuum which is spark protected will be used to pump it into a drum if the volume is greater than can be absorbed with the pads themselves.

Activity 2: Filling containers with clean solvent - A low-pressure hose with automatic shut-off valve is used to fill the containers with clean solvent. Leaking fittings, a damaged hose, or carelessness could lead to the discharge of solvent. Employee training emphasizes the importance of inspection, maintenance, and reporting of such conditions.

Response Action 2: The employee will immediately cease dispensing solvent and determine the source of the leak through visual inspection. Absorbent pads will be used to soak up spilled material, which will be placed in 55-gallon containers. If necessary, absorbent pads will used to pump it into a container. The dispensing equipment will not be used again until necessary repairs are made.

Activity 3: Moving of containers that contain hazardous material or waste - During movement of containers, the potential exists that they will tip over or drop. To minimize the possibility of spills under those conditions, all containers are kept covered when being moved.

Response Action 3: The container will immediately be placed up-right and inspected for damage. Spilled material will be collected with absorbent pas and placed in a 55-gallon container. If necessary, a dike will be constructed with absorbent pads to contain the spill, and a portable pump or wet-dry vacuum, which is spark-protected, will pick up both the material and transfer it to an empty container. If the container is leaking or appears to be damaged so that leaks might occur in the future, the contents will be transferred to a new container.

Activity 4: Delivery truck drum transfers- Individual containers contain from 1 to 55 gallons of hazardous materials, a quantity that can be contained by absorbent pads, if accidentally spilled. Each vehicle is equipped with a hoist and hand cart for ease of moving clean materials off the truck and into the customer's shop and returning the hazardous waste to the truck. Clamp type lids are on containers during movement to prevent spills. Each truck has a shovel and absorbent material to contain a minor spill. The cargo is secured in the vehicle before transport.

Each delivery truck carries one empty 30- or 55-gallon container to enable the transfer of contents if a container is damaged during the transfer operation. The damaged container is transferred back to the Safety-Kleen facility and sent to Denton, Texas for recycling.

Response Action 4: In the event of a spill, the container will be immediately up-righted. The driver will then survey the area close to the truck for storm drain inlets or other features that could cause the spilled material to migrate away from the spill site. Absorbent pads will first be used to construct a dike at the storm drain inlet, or another feature as appropriate. Additional absorbent pads will then be used to clean up the spilled material. The container will be inspected for evidence of leaks or damage,

and if detected, the material will be transferred into a clean, empty 30- or 55-gallon container.

Activity 5: Spills on concrete pad - Under most spill conditions, the hazardous material or waste can be totally contained on the concrete surface and in the catchment system.

Response Action 5: Spills will be contained with absorbent pad dikes. Upon containment arrangements will be immediately undertaken to recover the materials. Recovering the spilled materials will be performed with portable pumps, or wet-dry vacuums (which are both spark-protected and can pick up ignitable or non-ignitable materials) and absorbent pads. The wet-dry vacuum pump used is specified for Class I, Group D use and approved or cleaning hazardous materials under the National Electronic Code.

Activity 6: Spills inside buildings -

Response Action 6: In the event of a spill inside a building, the doors and windows should be opened to improve the ventilation in the confined area. If hazardous waste or solvent is spilled, all sources to ignition such as thermostats or light switches will be left in position (either on or off) at the time of the spill. Explosion rated areas are designated with posted signs. The worker will enter the area and clean up the material using the methods described in the preceding sections, which are based on the recommendations contained in the MSDS for products handled at the facility.

Activity 7: Spills on Soil -

Response Action 7: The procedures for removal of contaminated soil will depend on the size of the affected area. Spills affecting a few cubic yards of soil will be excavated using hand tools (shovels, picks, etc.) and the soil placed in 55-gallon containers. When the affected soil is no longer visible from the sidewalls and bottom of the excavation, confirmatory soil samples will be collected for laboratory analysis. The number of samples taken will be based on SW-846 criteria. Also, blank and background samples will be collected and analyzed. Samples will be analyzed for the constituents of the material involved in the spill using approved analytical methods. Once confirmation that the soil removal is complete, the excavation will be backfilled with clean soil or other fill material.

Spills involving more than a few cubic yards of contaminated soil will be cleaned up using a backhoe or other suitable equipment (depending on facility-specific access constraints). The extent of soil contamination may be evaluated prior to excavation by collecting and analyzing soil samples using methodology

approved for facility closure. Excavated soil will be placed in covered bulk container (typically 10 to 20 cubic yards). Once excavation is completed, verification samples will be collected and analyzed as described above before the excavation is backfilled.

Contaminated soil will be transported to a permitted hazardous waste disposal facility by a registered hazardous waste hauler.

Major Spills

Any spill greater than 55 gallons or one that cannot be completely controlled using the methods described above is considered a major spill. A major spill is usually the result of a vehicular accident, tank overfilling, equipment failure, or a fire and/or explosion. Spilled hazardous material or waste that escapes collection could potentially contaminate soil, surface water, groundwater, sanitary sewer systems, and storm sewer systems. Since Safety-Kleen facility personnel are not trained in the use of SCBA, the emergency coordinator will immediately notify the designated Safety-Kleen primary or secondary spill control contractor if an emergency response situation arises that requires the use of SCBA equipment. The following response actions should be taken by the emergency response contractor, or local responding agency, as appropriate:

- Approach cautiously. Consider the health and safety of oneself, and assist any injured people prior to emergency response.
- Identify the hazard(s). Placards, container labels, shipping papers, and/or knowledgeable persons on the scene are valuable information sources.
- Stop the flow of hazardous material or waste, if possible, by turning off tank system pumps or valves, for example.
- Retain, contain, or slow the flow of the hazardous material or waste if it cannot be stopped.
- If hazardous material or waste escapes containment efforts, immediately perform a visual inspection. Call the Los Angeles Fire Department.
- Immediately recover the spilled hazardous material or waste to the extent possible to reduce property and environmental damage. Start recovery operations immediately.

Prior to the arrival of the emergency response contractor, the emergency coordinator will take the following steps to prevent exposure of workers or the public, the migration of spilled material away from the facility, if it is safe to do so using the available emergency and personal protective equipment.

- Operate valves or controls to stop flow of waste

- Construct berms using absorbent pads at locations where spilled material could enter a storm drain or otherwise flow off site
- Containerize spilled material, if possible, using spare containers located in the container storage area
- Prevent people from entering the spill area.

The emergency coordinator will report any incident as soon as possible but no later than 24 hours after its detection to the Safety-Kleen environmental, Health and Safety (EHS) Department, the California OES, the National Response Center, and California DTSC as listed on the emergency Notification List.

The person reporting a spill should be prepared to give his or her name, position, company name, address, and telephone number. The person reporting should also describe the hazardous material or waste spilled and, if possible, some estimate of the amount, the containment status, and specify any equipment needed.

Contaminated material resulting from remedial actions for major spills may be transported directly to a permitted hazardous waste treatment, storage, or disposal facility (TSDF) if the quantity of waste material exceeds the storage capacity of the facility or a Safety-Kleen recycle center.

If the release is from the tank system, as much hazardous material or waste as possible must be removed and either pumped into containers or a tanker truck for shipment to a permitted TSDF. Hazardous wastes will not be stored in the product storage tank.

The tank system may not be used again until the tank has been inspected, the cause of the release determined, and repairs made. The tank system will be closed in accordance with Title 22 Section 66264.197 unless the following requirements are met:

- If the cause of the release was a spill that has not damaged the integrity of the system, the system may be returned to service as soon as the released waste is removed and repairs, if necessary, are made.
- If the tank system has undergone extensive repairs (e.g., installation of an internal liner, repair of a ruptured containment vessel), the tank system must not be returned to service until the tank system is certified by an independent, qualified professional engineer registered in the State of California in accordance with Title 22 Section 66270.11(d). This certification must be submitted to the California DTSC within seven (7) calendar days after returning the tank system to use. The certification must state that the repaired system is capable of handling

hazardous wastes without release for the intended life of the system. Safety-Kleen internal policy requires that an "Incident Alert Form" be completed within 24 hours. The incident Report form contains at least the equivalent and pertinent information shown in the example form. Every spill is recorded on the Incident Alert Form (Appendix VIII-2) and reviewed by facility. A copy of this report is sent to the Safety-Kleen EHS Department. In addition, for spills, which occur onsite and require written notification to DTSC, Safety-Kleen will provide the location of the spill on a site plan.

6. Local and state emergency coordinator and arrangements

The facility Manager (or designee) is the emergency coordinator. The emergency coordinator is listed in the Emergency Notification List, which is kept at the facility.

The Emergency Notification List includes the names, and day and evening phone numbers of the emergency coordinator and the alternates. The emergency coordinator is responsible for implementing the contingency plan during an emergency; however, all employees must be familiar with the procedures in this plan and are responsible for proper implementation of the plan should the emergency coordinator or the alternates are unavailable.

At all times during working hours, the emergency coordinator or one of the alternates is either on the facility premises or on call with responsibility for coordinating all emergency response measures. If any emergency occurs during non-working hours, the local police and fire departments will be able to contact the emergency coordinator or one of the alternates at home, because all agencies have been given copies of the Contingency Plan. The primary and alternate emergency coordinators are thoroughly familiar with all aspects of the facility's contingency pan, all operations and activities at the facility, the location and characteristics of materials and wastes handled, the location of all records within the facility, and the facility layout. In addition, the coordinator has the authority to commit the resources needed to carry out the contingency plan.

<u>Emergency response agencies and team members</u> - The emergency response agencies and team members must be notified whenever there is an imminent or actual emergency.

7. Emergency coordinator(s), (name(s), address(es), phone number(s), order in which they will be called)

The list of the emergency coordinators, their names, addresses, phone numbers, and the order in which they will be called is listed in Appendix X-3.

8. **List of emergency equipment (location, physical description, capabilities, and directions for uses**

   The list of emergency equipment at the facility is presented in Appendix VIII-3. The location of the equipment is shown on Figure 10-1. Personnel protective equipment such as boots, coveralls, aprons, gloves, and respirators, are inspected at least weekly and are replaced when they show signs of excessive wear or have tears in them. Spare containers are available to hold recovered released material.

9. **Personnel evacuation plan (evacuation signals, evacuation routes, alternate route)**

   All exits are clearly marked in the warehouse and office areas. Employees are trained to be aware of all potential escape routes. The signal for evacuation is either a verbal or PA announcement describing the hazard and indicating the need for evacuation. The emergency coordinator will consider evacuation of the facility if any of the following conditions occur:

   - Fire that cannot be immediately extinguished with a fire extinguisher, and requires summoning the local fire department,
   - Minor fire that is extinguished with a fire extinguisher but generates noxious or irritating smoke, gas, or vapors,
   - Threat of explosion or actual explosion,
   - Major spill (greater than 55 gallons) that cannot be contained,
   - Minor spill that produces irritating vapors,
   - Any incident having the potential to injure personnel by physical contact or damaging structures,
   - Any situation where the emergency coordinator believes that one of the above is about to occur.

In an emergency, all persons are to be evacuated from the area and assembled at the designated location on the evacuation map (Figure 10-1). The emergency coordinator will ensure that all personnel are accounted for and out of the area.

The Fire Department must be notified at the time of evacuation either from a safe onsite building or a neighboring facility.

10. **State Office of Emergency Services phone number**

    The contact information for the State Office of Emergency Services is included in Appendix X-3.

11. **Procedures to remove surface impoundments from service in accordance with 66264.227(b)**

This facility does not have any surface impoundments; therefore this section is not applicable.

12. Emergency coordinator responsibilities (item K. below)

Please see Section X(L) below.

13. Information specified in Items M. through T. below

Please see Section X(M) through X(T) below.

J. Copies of the Contingency Plan
(22 CCR 66264.53(a), 66270.14(b)(19))
40 CFR 264.53)
Procedures to ensure that contingency plan:

1. **Maintained at facility**

2. **Provided to local authorities**
   This plan and all revisions are kept at the Facility. Copies of this document and all revisions to this document will be provided to DTSC, and the local emergency response agencies, authorities, and organizations. This plan and all revisions to the plan are made readily available to employees working at the facility.

K. Amendment of the Contingency Plan
(22 CCR 66264.54, 66270.14(b)(19))
(40 CFR 264.54)
Procedures for amending contingency plan when:

1. **Permit is revised -** If the permit is revised or modified in any way that will cause a change in operation of the facility, the contingency plan will be revised.
2. **Facility changes in any way that materially increases the potential for an emergency situation, or changes the response necessary for an emergency -** If the facility is modified or is changed to accommodate a new process or waste type that increases the potential for an emergency situation, the Contingency Plan will be revised.
3. **Regulations are revised -** If any regulation is revised which requires a physical change in facility operation or requires additional or new information to be included in the Contingency Plan, the Contingency Plan will be revised.
4. **Plan fails -** If the plan fails to provide adequate response to an emergency situation, the Contingency Plan will be evaluated and revised to correct the situation.
5. **Coordinator(s) change(s) -** If a coordinator's duties change from those stated in the plan, the plan will be revised to reflect those changes.

6. **Equipment changes -** Any change in equipment, which will significantly impact the operation of the facility or increase the potential for an emergency situation will require the Contingency Plan to be revised.

In addition to those factors listed above which necessitate revisions to the Contingency Plan, the plan will be reviewed and updated, if necessary, as follows:

- The facility permit is modified to allow new process wastes to be stored or treated, or applicable regulations are revised.
- The list or location of emergency equipment changes.
- The facility changes in its design, construction, operation, maintenance, or other circumstances in a way that may increases the potential for fires, explosions, or releases of hazardous waste or hazardous waste constituents, or changes the response necessary in an emergency.
- The names, addresses, or phone numbers of emergency coordinators changes.
- The employee assigned to each emergency task changes.
- The plan fails when implemented in an emergency.

DTSC will be notified for all amendments.

L. Emergency Coordinator Responsibilities (22 CCR 66264.52(d), 66264.55, 66264.56, 66270.14(b)(7) and (b)(19)) (40 CFR 264.52(d), 264.55, 264.56, 270.14(b)(7))

1. Availability (22 CCR 66264.55) (40 CFR 264.55)

a. On-site
b. On-call

During normal site operations, the Emergency Coordinator is onsite. After hours, the Emergency Coordinator is on-call.

2. Familiar with contingency plan, facility operations, waste locations and characteristics, location of records, facility layout (22 CCR 66264.55) (40 CFR 264.55)

The Emergency Coordinator is familiar with the contingency plan, facility operations, waste locations and characteristics, the location of records, and facility layout.

3. Authority to commit necessary resources (22 CCR 66264.55) (40 CFR 264.55)

The Emergency Coordinator has the authority necessary to commit resources and to implement the Contingency Plan.

4. **Activate alarms and communications systems**
   (22 CCR 66264.56(a)(1))
   (40 CFR 264.56(a)(1))

5. **Notifications of state and local emergency response agencies**
   (22 CCR 66264.56(a)(2))
   (40 CFR 264.56(a)(2))

   Whenever there is an imminent or actual emergency situation, the emergency coordinator (or the alternate, when the emergency coordinator is unavailable) will act immediately to:

   - Activate internal facility communication system to notify all facility personnel
   - Notify emergency response agencies (see Appendix X-3) if assistance is required.

6. **Identification of release (character, source, amount, area/extent)**
   (22 CCR 66264.56(b))
   (40 CFR 264.56(b))

   Whenever there is a release, fire, or explosion, the emergency coordinator will immediately identify the source, amount, and area/extent of any released hazardous materials or waste. The emergency coordinator will use visual observation of the incident or review of facility records or manifests.

7. **Assessment of public health and environmental effects**
   (22 CCR 66264.56(c))
   (40 CFR 264.56(c))

   The emergency coordinator must also assess possible hazards to human health or the environment that may result from the release, fire, or explosion. This assessment must consider both direct and indirect effects of the release, fire, or explosion (i.e., the effects of any toxic, irritating, or asphyxiating gases that are generated, or the effects of any hazardous surface water run-off from water or chemical agents used to control fire and heat-induced explosions).

   This assessment will include an evaluation of whether evacuation of the facility is necessary, based on the criteria described in the evacuation plan. In conducting this assessment, the emergency coordinator may use visual observation, review facility records or manifests.

8. **Evacuation notification to local officials**

(22 CCR 66264.56(d)(1))
(40 CFR 264.56(d)(1))

If the emergency coordinator determines that the facility has had a release, fire, or explosion that could threaten human health, or the environment outside the facility, the coordinator must report those findings described below. Releases of less than 10 gallons from normal operations that do not migrate off site will be logged in the Operating Record, and will be cleaned up following the contingency plan, but will not trigger notification (such releases do not trigger implementation of the Contingency Plan).

- If the assessment indicates that evacuation of local areas may be advisable, the coordinator will immediately notify the Sheriff or Police Department. The coordinator must be available to provide local officials with information pertinent to the evacuation. The National Response Center will also be notified.

9. Notification of OES
(22 CCR 66264.56(d)(2))
40 CFR 264.56(d)(2))

- The coordinator will notify within 24 hours the California Department of Toxic Substances Control (DTSC), California Office of Emergency Services (OES), and the U.S. Environmental Protection Agency's (EPA) Office of Emergency Response and provide the following information:
    - Name and telephone number
    - Name and address of facility
    - Time and type of incident (e.g., release, fire)
    - Name and quantity of material(s) invol
    - Extent of injuries, if any
    - Possible hazards to human health or the environment.

10. Prevent spread or recurrent of emergency:
(22 CCR 66264.56(e))
(40 CFR 264.56(e))

a. **Stop processes and operations -** All processes and operations will cease in the event of an emergency until such time they may resume in a safe manner.
b. **Collect and contain released wastes -** All waste materials generated will be collected, contained, and disposed of as described in the Waste Analysis Plan.
c. **Remove or isolate containers -** Containers will be removed and isolated and handled as described in the Waste Analysis Plan.

The emergency coordinator must take the following measures to ensure that fires, explosions, and releases do not occur, recur, or spread to other hazardous waste areas a the facility:

- Stop processes and operations
- Collect and contain released hazardous materials or waste
- Remove or isolate containers.

11. Monitor leaks, pressure buildup, gas generation, and rupture of pipes, valves and other equipment
(22 CCR 66264.56(f))
(40 CFR 264.56(f))

If the emergency coordinator stops facility operations, he must monitor for leaks or ruptures in tanks, pipes, or other equipment.

12. Cleanup provisions:
(22 CCR 66264.56(g))
(40 CFR 264.56(g))

a. **Wastes -** Immediately after an emergency, the emergency coordinator must provide for treating, storing, or disposing of recovered waste from a release, fire, or explosion at the facility. This will be accomplished by storing the recovered solid or liquid waste and any decontamination wastewater in a new container in the container storage area. If this area is not available due to emergency situations, containerized material will be temporarily stored outside the building with temporary berms placed around containers. Containers will be placed in the Container Storage Area as soon as possible. Waste will be managed in accordance with the waste analysis plan, and management practices plan. Wastes will be disposed in accordance with the analytical results at a permitted TSD facility.

b. **Contaminated soil -** Immediately after an emergency, the emergency coordinator must provide for treating, storing, or disposing of contaminated soil from a release, fire, or explosion at the facility. This will be accomplished by storing the recovered solid or liquid waste and any decontamination wastewater in a new container in the container storage area. If this area is not available due to emergency situations, containerized material will be temporarily stored outside the building with temporary berms placed around containers. Containers will be placed in the Container Storage Area as soon as possible. Waste will be managed in accordance with the waste analysis plan, and management practices plan. Wastes will be disposed in accordance with the analytical results at a permitted TSD facility.

c. **Surface water -** In the unlikely event that surface water is impacted, provisions for cleanup are detailed in Section X.I.6.

d. **Other materials -** Immediately after an emergency, the emergency coordinator must provide for treating, storing, or disposing any other material from a release, fire, or explosion at the facility. This will be accomplished by storing the recovered solid or liquid waste and any decontamination wastewater in a new container in the container storage area. If this area is not available due to emergency situations, containerized material will be temporarily stored outside the building with temporary berms placed around containers. Containers will be placed in the Container Storage Area as soon as possible. Waste will be managed in accordance with the waste analysis plan, and management practices plan. Wastes will be disposed in accordance with the analytical results at a permitted TSD facility.

13. Cleanup prior to receipt of incompatible wastes
(22 CCR 66264.56(h)(1))
(40 CFR 264.56(h)(l))

Not applicable, wastes treated, stored, or transferred at this facility are compatible.

14. Emergency equipment is clean and ready for use before operation is resumed
(22 CCR 66264.56(h)(2))
(40 CFR 264.56(h)(2))

The emergency coordinator must ensure that, in the affected areas of the facility:

- No waste (i.e. strong oxidizers) that may be incompatible with the released material is stored until cleanup procedures are completed.
- All emergency equipment is cleaned and fit for its intended use before operations are resumed.

15. Notification of agencies prior to resuming operation
(22 CCR 66264.56(i))
(40 CFR 264.56(i))

The emergency coordinator will notify the California DTSC and EPA that the facility is in compliance with the above before operations are resumed in the affected areas of the facility.

16. Record emergency incident in Operating Record
(22 CCR 66264.56(j))
(40 CFR 264.56(j))

In the event an emergency occurs, it will be recorded in the facility operation record.

17. Report incident to DTSC
(22 CCR 66264.56(j)(1) - (7))
(40 CFR 264.56(j)(1) - (7))

In the event of a release to the environment (leak or spill) from the tank system or secondary containment system, the emergency must report it to the California DTSC and EPA within 24 hours, except as provided below:

- A leak or spill of hazardous waste from the tank system or secondary containment system is exempt from the above notification if it is less than or equal to a quantity of one (1) pound, and
- Immediately contained and cleaned up.

For any incident that requires the implementation of the Contingency Plan, the emergency coordinator must note in the operating record the time, date, and details of such incident. Within 15 days of the incident, the Facility Manager (or designee) must submit a written report on the incident to the California DTSC and EPA. The report must include:

- Name, address, and telephone number of the owner and operator.
- Name, address, and telephone number of the facility.
- Date, time, and type of incident (e.g., fire, explosion).
- The extent of injuries, if any.
- An assessment of actual or potential hazards to human health or the environment, if applicable
- Estimated quantity and disposition of recovered materials and wastes that resulted from the incident.
- Likely route of migration of the release.
- Characteristic of the surrounding area (i.e., soil composition, geology, hydrogeology, climate, etc.).
- Results of any monitoring or sampling conducted in connection with the release. If data are not available within 15 days, the data must be submitted as soon as available.
- Proximity to downgradient drinking water, surface water, and populated areas.
- Description of response actions taken or planned.

It is the responsibility of the emergency coordinator to review all release events to evaluate whether a pattern exists that indicates a deficiency in facility operating procedures. If such a pattern is detected, facility operating procedures will be modified to reduce the likelihood that such spills will recur.

18. **Storage/treatment of released material in accordance with hazardous waste management requirements (if applicable) (22 CCR 66264.56(g)) (40 CFR 264.56(g))**

    The emergency coordinator will ensure that released materials will be properly managed, stored, and disposed in accordance with hazardous waste requirements if necessary.

M. Container Spills and Leakage (22 CCR 66264.52(a), 66264.171, 66264.175(b)(5), 66270.14(b)(7) and (b)(19)) (40 CFR 264.52(a), 264.171, 264.175(b)(5), 270.14(b)(7))

1. **Procedures -** As described below.

2. **Timing -** As described below.
   Container spills and leakage will be cleaned using absorbent pads and a wet/dry vacuum. The contaminated pads will be stored in 55-gallon drums and managed and disposed as hazardous waste. All spills and leakage will be cleaned immediately upon discovery. The container storage area is inspected daily and therefore spills and/or leakage will not accumulate or go undetected for more than 24 hours.

N. Tank Spills and Leakage (22 CCR 66264.52(a), 66264.196, 66270.14(b)(7) and (b)(19)) (40 CFR 264.52(a), 264.196, 270.14(b)(7))

1. **Procedures to stop waste addition/flow -** As described below.

2. **Procedures for inspecting system to determine cause -** As described below.

3. **Procedures and timing for removing waste in compliance with 66264.196(b)(3) -** As described below.

4. **Procedures for containment and removal of visible releases**
   The UST systems are designed with high level alarms and spill control to prevent overflow. In the event of a spill or leak from the tank system, the flow of hazardous waste into the tank system will be immediately stopped, by ceasing to empty containers into the drum washer unit and will not be restarted until the tank system and secondary containment is inspected and the cause of the release is determined. Absorbent pads and berms will be placed around the spill to mitigate further migration. Wastes will be removed from the tank and/or secondary containment system within 24 hours of detection by a Safety-Kleen emergency spill contractor. The contractor will transfer the overfilled material into their tanker truck or containers with pumps or wet vacuums. The emergency spill contractor will also inspect the tanks and secondary containment.

The flow of hazardous waste into the tank system will be stopped to ensure that further migration of leaks or spills to soil or surface water will be prevented until removal and proper disposal of any visible contaminated soil or surface water can be performed.

5. Notifications and reports

a. 24-hour report - The emergency coordinator will notify within 24 hours the DTSC, OES, and EPA of an UST release.
b. 30-day report - Within 30 days of such a release, the emergency coordinator will notify the EPA, and DTSC.

6. Provisions for secondary containment, repair, or closure and certification of repairs

Any major repair to the tank system and its secondary containment such as those mentioned in 22 CCR 66264.196(a)(B)(7) will be certified by an independent, qualified, professional engineer, registered in California, in accordance with section 66270.11(d), that the repaired system is capable of handling hazardous wastes without release for the intended life of the system prior to tank return to service. Such certification will be submitted to the Department within seven days after returning the tank system to use.

If the tank cannot satisfy the requirements of Title 22 Section 66264.196(e), the tank system will be closed in accordance with Title 22 Section 66264.197.

O. Surface Impoundment Spills and Leakage (22 CCR 66264.52(a), 66264.226(c), 66264.227, 66270.14(b)(7), and (b)(19), 66270.17(f)) (40 CFR 264.52(a), 264.226(c), 264.227, 270.14(b)(7), 270.17(e))

This facility does not have any surface impoundments; therefore, this section is not applicable.

1. Emergency repairs, procedures for the following:
a. Stopping waste addition/flow
b. Containing leaks
c. Stopping leaks
d. Preventing catastrophic failure
e. Emptying the impoundment
f. Notifying DTSC within 7 days

2. Certification of dike integrity

3. Repairs as a result of a sudden drop in liquid level
a. Existing portions
b. Other portions

P. Waste Pile Spills and Leakage
(22 CCR 66264.52(a), 66264.251(i), 66270.14(b)(7) and (b)(19))
(40 CFR 264.52(a), 270.14(b)(7))

1. **Notify DTSC within 7 days**

2. **Remove accumulated liquid**

3. **Repair or replace leaking liner**

4. **Certify repair**

This facility does not have any waste piles; therefore, this section is not applicable.

Q. Drip Pad Spills and Leakage
(40 CFR 264.52(a), 264.572(m), 270.14(b)(7))

1. **Record discovery of leak in operating log**

2. **Remove leaking pad from service**

3. **Determine steps and schedule for repairing pad and cleaning up leakage**

4. **24-hour notice to DTSC**

5. **10-day report to DTSC**

6. **Notification and certification of completed repairs/cleanup**

This facility does not have any drip pads; therefore, this Section is not applicable.

R. Safety and Emergency Equipment
(22 CCR 66264.32, 66264.33, 66264.34, 66264.52(e), 66270.14(b)(7) and (b)(19))
(40 CFR 264.32, 264.33, 264.34, 264.52(e), 270.14(b)(7))

Identify safety and emergency equipment, which is to be used by, and is available to, employees and persons using the facility:

1. **Examples of safety equipment to be included are:**

   a. **Respirators**
      - **Type -** 3M half-mask and full-face organic vapor respirators.
      - **Quantity -** Each sales representative and facility employee who may involve in response to an emergency is issued a 1/2-

face respirator. Numerous full-face respirators are also stored at the facility.

- **Location -** Respirators are stored in the emergency response kit shown on Figure X- 2.

b. Self-contained breathing apparatus (SCBA)

- **Type -** Not applicable, no SCBAs are o
- **Quantity -** Not applicable, no SCBAs are onsite.
- **Location -** Not applicable, no SCBAs are onsite.
  If necessary, Safety-Kleen will contract with an outside contractor for confined space entry services.

c. Goggles/face shield

There are full-face shields available and safety glasses available for each employee at the facility. This equipment is stored in the emergency response kit located on northeast side of warehouse.

d. **Boots**

- **Material -** Steel-toed neoprene
- **Duration of Use -** The boots are replaced as necessary.
  A pair of steel-toed boots is assigned to each employee. Two pair of neoprene/steel-toed boots are available for employee use.

e. Coveralls

- **Material -** Coveralls are made of Tyvek Neoprene aprons are also used.
- **Duration of use -** Tyvek coveralls are normally used only once and disposed of. The neoprene aprons are reused after cleaning and replaced as needed.

f. Gloves

- **Material -** A pair of neoprene gloves is assigned to each employee.
- **Duration of use -** Replaced as necessary.

g. Material Safety Data Sheets (MSDS)

Electronic copies of all SDs are kept on a database.

h. Monitoring equipment

Monitoring equipment includes the UST high level and leak detection system.

i. Other

Other equipment available include: mops, buckets, shovels, soap, portable pumps, wet/dry vacuum, telephones, eye wash stations, first aid station, fire extinguisher, and safety showers.

2. Specify locations, description, and capabilities of emergency equipment. Examples include:

Figure X-2 shows the locations of all emergency equipment at the facility.

a. Telephone or radio for summoning aid

b. Warning or alarm system

Telephones are available to summon outside help. A PA system is available as a warning and alarm system for communication with employees.

c. Safety shower - As shown on Figure X-2.

d. Eyewash - As shown on Figure X-2.

e. First-aid supplies - As shown on Figure X-2

f. Safety shower, eyewash, and first aid supplies are available throughout the facility for employee emergencies.

g. Fire extinguisher

- **Type: 10-pound** ABC., and 45-pound dry chemical
- **Location -** As shown on Figure X-2 and throughout the facility to assist in fire fighting.

h. Other firefighting equipment

N/A

i. Spill control equipment

- **Decontamination equipment**
  Spill control and decontamination equipment include: mops, buckets, soap, absorbent pads, shovels, portable pumps, wet/dry vacuum. The exact location of this equipment in the new facility has not yet been established.

- **Other**
  All equipment is listed above.

3. **Describe the schedule for testing and maintaining safety and emergency equipment**

   The frequency for testing all equipment is presented in Section X(C).

4. **Describe the emergency lighting provided:**

   - **Types -** The facility has been designed with a 24-hour wall-mounted outdoor flood lighting system for both safety and security. Also, there are solar and battery-powered "Exit" signs throughout the facility.
   - **Locations -** Emergency lights are located throughout the facility.

S. Water Supply
Describe the water supply to be used, taking into consideration the following:

1. **An adequate supply (volume and pressure) available for fighting fires, cleaning equipment, dust control, etc.**
   (22 CCR 66264.32(d), 66264.52(e), 66270.14(b)(7) and (b)(19))
   (40 CFR 264.32(d), 264.52(e), 270.14(b)(7))

   Water at this facility is used mostly for domestic purposes. There is no sprinkler at the facility. Dry chemical and ABC type fire extinguishers are primarily used for extinguishing fires
   In case of fire, Fire Department connect their truck to the fire hydrant - in Worthen Avenu 200 feet from the facility.

2. **An on-site supply not approved for drinking must have warning labels in English and Spanish on all taps connected to that supply. Describe locations of taps.**
   (22 CCR 66270.14(b)(8)(C) and (b)(19))
   (40 CFR 270.14(b)(8)(iii)

   On-site water supplies have been approved for drinking; therefore, this section is not applicable.

T. Backflow Protection
(22 CCR 66270.14(b)(8)(C))
(40 CFR 270.14(b)(8)(iii))
Water supplies must be protected with backflow protection devices, in accordance with Section 7064, Title 17 CCR. Describe:

1. **Types of**
   Reduced pressure principle backflow prevention device.

2. **Locations**
   Water supplies at this facility are protected with a backflow device at the service connection.

Table X-1 Emergency Equipment Inspection Frequency

Equipment	Inspection Frequency
Fire Extinguisher	Inspected weekly
ABC Fire Extinguisher	Test or replaced annually
Dry Chemical Fire Extinguisher	Tested semi-annually
Telephone system external	Utilized daily
Public address (PA) system	Utilized daily
Eye wash	Inspected weekly, tested weekly
Safety shower	Inspected weekly, tested weekly
First aid kit	Inspected weekly
Absorbent sheets	Supply checked weekly
Employee respirators	Cleaned after use, cartridges replaced after each use
Emergency equipment storage	Inspected monthly, cartridges replaced annually or after each use
Tank alarm system	Tested and inspected weekly
Facility lights	Utilized daily

Figure X-1

Emergency Evacuation Map

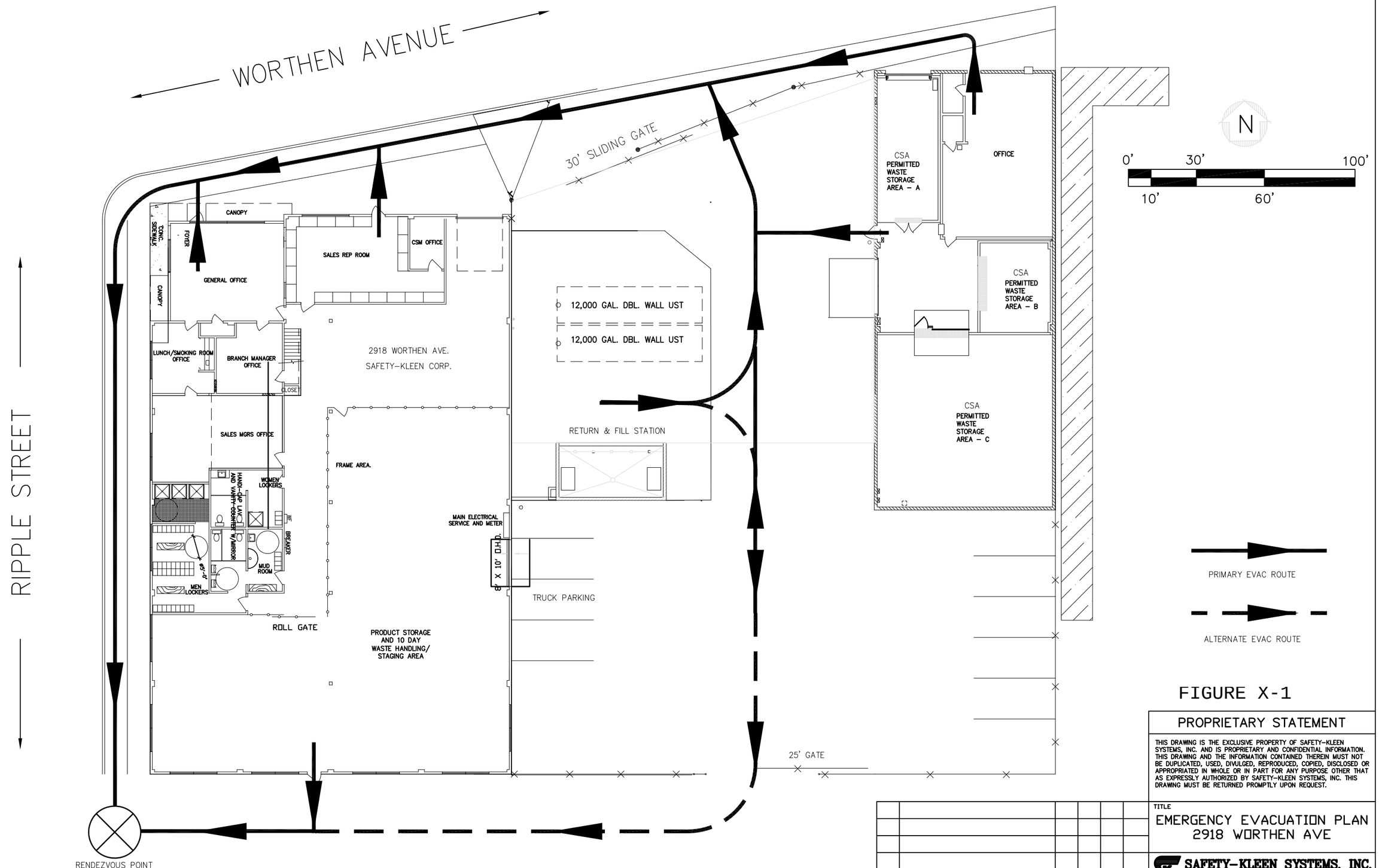

FIGURE X-1

PROPRIETARY STATEMENT

THIS DRAWING IS THE EXCLUSIVE PROPERTY OF SAFETY-KLEEN SYSTEMS, INC. AND IS PROPRIETARY AND CONFIDENTIAL INFORMATION. THIS DRAWING AND THE INFORMATION CONTAINED THEREIN MUST NOT BE DUPLICATED, USED, DIVULGED, REPRODUCED, COPIED, DISCLOSED OR APPROPRIATED IN WHOLE OR IN PART FOR ANY PURPOSE OTHER THAT AS EXPRESSLY AUTHORIZED BY SAFETY-KLEEN SYSTEMS, INC. THIS DRAWING MUST BE RETURNED PROMPTLY UPON REQUEST.

NO.	DESCRIPTION	BY	CHK	APPR	DATE
A	ISSUED FOR PERMIT	JEK	NT	NT	041218
0	NEW ISSUE FOR REVIEW	JEK	MC	MC	021608

REVISIONS

TITLE

EMERGENCY EVACUATION PLAN
2918 WORTHEN AVE

SAFETY-KLEEN SYSTEMS, INC.
2600 N. CENT. EXPRESSWAY STE 400 RICHARDSON, TX. 75080
PHONE 800-669-5740

SCALE	BY	CHKD	P.E. APPR	DP. APPR	DATE
1"=20'	JEK	MC	MC	MC	2/16/08

SERVICE CENTER BRANCH AT: LOS ANGELES, CA

STD-DWG-REV NO. 7116-SP00-008

Figure X-2

Emergency Equipment Location Map

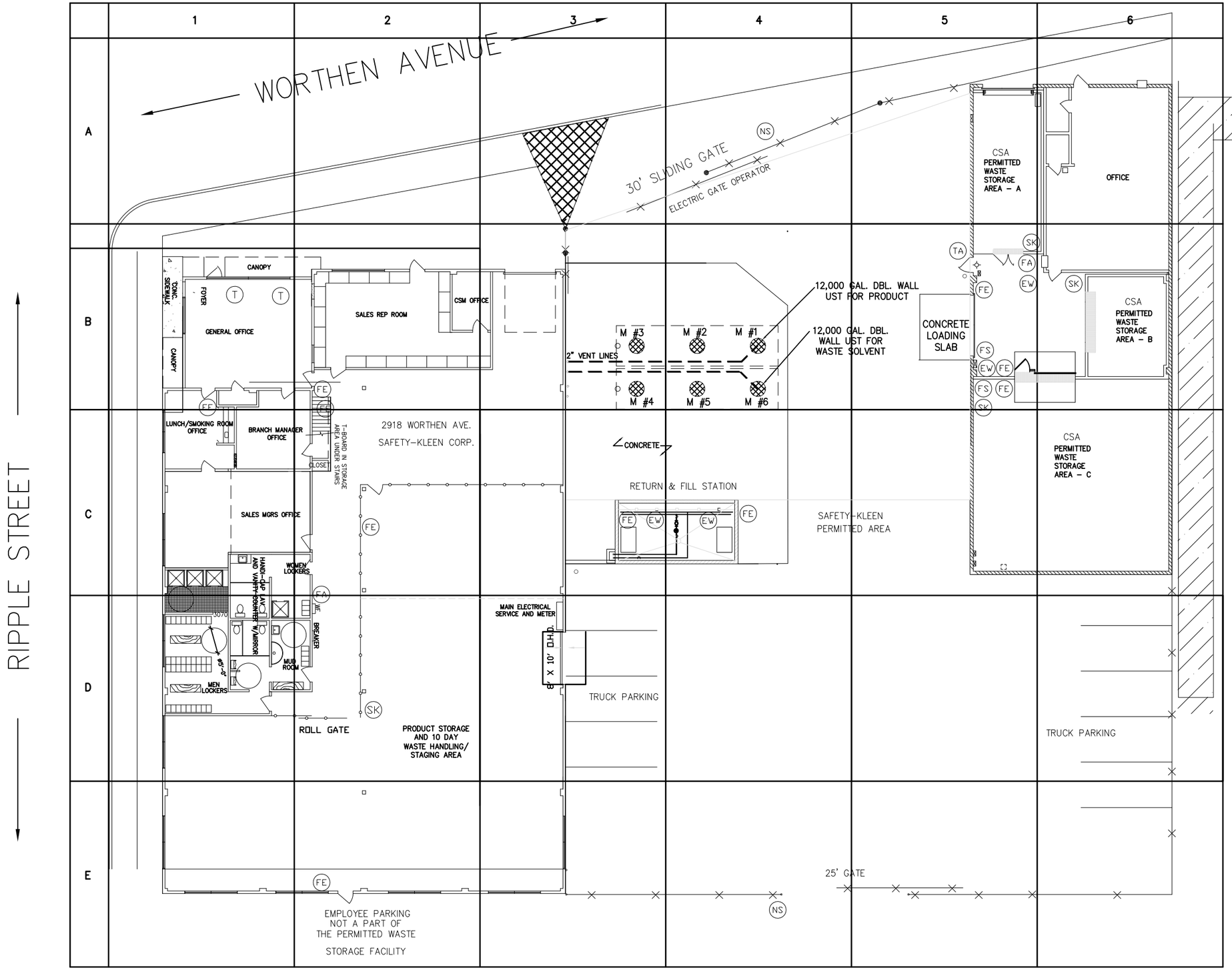

CSA – CONTAINER STORAGE AREA

(T) – TELEPHONE

(FE) – FIRE EXTINGUISHER (TYPICAL 10# ABC)

(FA) – FIRST AID STATION

(SK) – SPILL KIT

(NS) – 'NO SMOKING' FACILITY SIGN

(EW) – EYE WASH

(FS) – FIRE SUPPESSION

(TA) – TANK ALARM

FIGURE X-2

NO.	DESCRIPTION	BY	CHK	APPR	DATE
13	REVISED FOR PERMIT	JEK	NT	NT	072518
12	REVISED FOR PERMIT	JEK	NT	NT	041318
11	REVISE TO SHOW CURRENT CONDITIONS	JEK	GM	GM	061715
10	REVISE TO SHOW CURRENT CONDITIONS	JEK	NT	NT	041115
09	ADD PROPOSED IMPROVEMENTS	JEK	SL	SL	110509
08	REVISE FENCE LOCATION	JEK	NT	NT	091609
07	REVISE NOTES/ EQP. LOCATIONS	JEK	NT	NT	061708
06	REVISE NOTES/ EQP. LOCATIONS	JEK	NT	NT	052808
05	REVISE TO SHOW CURRENT CONDITIONS	JEK	MC	MC	021408
04	ADD OUTDOOR CONTAINMENT AREAS	JEK	SL	SL	071807
03	REVISE TO SHOW CURRENT CONDITIONS	JEK	KP	KP	121406
02	REVISE TO SHOW CURRENT CONDITIONS	JEK	RG	NT	030206
01	SHOW PROPOSED 10,000 GALLON FIRE GUARD AGT FOR 150 SOLVENT	WEY			

REVISIONS

PROPRIETARY STATEMENT

THIS DRAWING IS THE EXCLUSIVE PROPERTY OF SAFETY-KLEEN SYSTEMS, INC. AND IS PROPRIETARY AND CONFIDENTIAL INFORMATION. THIS DRAWING AND THE INFORMATION CONTAINED THEREIN MUST NOT BE DUPLICATED, USED, DIVULGED, REPRODUCED, COPIED, DISCLOSED OR APPROPRIATED IN WHOLE OR IN PART FOR ANY PURPOSE OTHER THAT AS EXPRESSLY AUTHORIZED BY SAFETY-KLEEN SYSTEMS, INC. THIS DRAWING MUST BE RETURNED PROMPTLY UPON REQUEST.

TITLE

SITE EMERGENCY EQP. LOCATIONS 2918 WORTHEN AVE

SAFETY-KLEEN SYSTEMS, INC.
2600 N. CENT. EXPRESSWAY STE 400 RICHARDSON, TX. 75080
PHONE 800-669-5740

SCALE	BY	CHKD	P.E. APPR	OP. APPR	DATE
1"=20'	WEY	-	-	-	2-2-96

SERVICE CENTER BRANCH AT	STD-DWG-REV NO.
LOS ANGELES, CA	7116-SP00-003

APPENDIX X-1

Example of Daily Inspection Subpart BB Inspection Checklist

CO Tank Systems Inspection

Form Code: 27

Compliance Header	
Inspector Name	
Area of Inspection	
Inspection Date and Time	
CO Tank Systems Inspection Instructions	
Note condition of inspection items. If item does not apply to an area, mark N/A. All unsatisfactory findings must be explained below. Include any repairs, changes or other remedial actions required or performed.	
CO Tank Systems Inspection Items	
Tanks - Check for evidence of failure (e.g., rusty or loose anchoring, distortion, paint failure, other).	
Pipes/Piping Supports - Check for evidence of failure (e.g., distortion, corrosion, paint failure, other).	
Valves - Check for evidence of failure (e.g., disconnected, corrosion, sticking, leaks, other).	
Fittings/Hose Connections - Check for evidence of failure (e.g., loose, disconnected, corrosion, other).	
Liquid Level - Check for acceptable level. (e.g., high level max, permitted volume, other).	
Secondary Containment - Check for evidence of failure (e.g., cracks, ponding or wet spots, pitting or deterioration, other).	
Sumps - Check for evidence of failure (e.g., cracks, ponding or wet spots, pitting or deterioration, other).	
Bonding and Grounding - Check for evidence of failure (e.g., loose, broken, corrosion or deterioration, other).	

Transfer Equipment/Pump and Pump Motors - Check for availability and condition (e.g., pumps, filters, strainers, hoses, leaks, overheating, other).	
Communication and Alarm System - Check for evidence of failure (e.g., test function, siren, strobe, other).	
Satellite Accumulation Containers - Check for condition and appropriate for area (e.g., filter/basket, solids, label and marking, other).	
Manways, Hatches, Other Openings - Check for evidence of failure (e.g., condition, corrosion, closure, other).	
Pressure Relief Valves (PRV)/ Flame Arrestors - Check for evidence of failure (e.g., condition, corrosion, other).	
Tanks marked with the words "Hazardous Waste" - Check for appropriate markings.	
Tanks not used marked as "Out of Service" - Check for appropriate markings.	
Tanks marked as to the contents - Check for appropriate markings (e.g., Non-Haz Only).	
Monitoring Equipment/Level Indicators - Check for evidence of failure (e.g., pressure and temperature gauges, level indicators, sticking, condensation, disconnected, other).	
Loading/ Unloading Areas - Check condition of area (e.g., available equipment, spill response, containment, pad condition, valve access box, ponding or wet spots, other).	
Compliance Footer	
Inspector Signature	
Attach Photo	
Inspection Overall Assessment	

Appendix X-2
List of Safety and Emergency Equipment

Equipment	Quantity	Location
Spill Kit	3	See Figure X-2 (Drawing SPOO-003)
Telephone	2	See Figure X-2 (Drawing SPOO-003)
Eye Wash Station	4	See Figure X-2 (Drawing SPOO-003)
[1]DC Fire Extinguisher	4	See Figure X-2 (Drawing SPOO-003)
ABC Fire Extinguisher (ABC)	10	See Figure X-2 (Drawing SPOO-003)
First Aid Kit	2	See Figure X-2 (Drawing SPOO-003)

1- DC (Dry Chemical)

*Each operational employee who respond to spills is issued gloves and a respirator in addition to the equipment listed above.

APPENDIX X-3

Documentation of Arrangements with Local Emergency Responders

safety-kleen®

Certified Mail 7008 1140 0003 2050 2616

October 17, 2008
Los Angeles Fire Department
2759 Rowena Street
Los Angeles, California, 90039

Updated Emergency Notification List for Safety-Kleen Systems, Inc.
2918 Worthen Avenue, Los Angeles, California 90039

Dear Sir/Madame:

In accordance with federal, state, and local requirements, please find enclosed a copy of the Safety Kleen Emergency Contingency Plan and an updated Emergency Notification List for the subject facility. As the Emergency Responders for this facility, please update your records, and notify us if you have any additional requirements or questions.

If you should have any additional questions or comments pertaining to this notification, please feel free to contact Gabriel Medel, the primary Emergency Coordinator, at 323-595-1478 or me at 480-940-7202

Sincerely,

Gabriel Medel

Neil Smith
Senior Environmental, Health and Safety Manager
Safety-Kleen Systems, Inc.

Enclosure

SAFETY-KLEEN CORP.
2918 WORTHEN AVENUE LOS ANGELES, CA 90039 323/660-9562 FAX 323/660-2075

safety-kleen®

Certified Mail 7008 1140 0003 2050 2609

October 17, 2008
Los Angeles Police Department
3355 San Fernando Road
Los Angeles, California, 90065

Updated Emergency Notification List for Safety-Kleen Systems, Inc.
2918 Worthen Avenue, Los Angeles, California 90039

Dear Sir/Madame:

In accordance with federal, state, and local requirements, please find enclosed a copy of the Safety Kleen Emergency Contingency Plan and an updated Emergency Notification List for the subject facility. As the Emergency Responders for this facility, please update your records, and notify us if you have any additional requirements or questions.

If you should have any additional questions or comments pertaining to this notification, please feel free to contact Gabriel Medel, the primary Emergency Coordinator, at 323-595-1478 or me at 480-940-7202

Sincerely,

Gabriel Medel

Neil Smith
Senior Environmental, Health and Safety Manager
Safety-Kleen Systems, Inc.

Enclosure

SAFETY-KLEEN CORP.
2918 WORTHEN AVENUE LOS ANGELES, CA 90039 323/660-9562 FAX 323/660-2075

Certified Mail 7008 1140 0003 2050 2593

October 17, 2008
Glendale Memorial Hospital
1420 S. Central Avenue
Glendale, CA 91204

Updated Emergency Notification List for Safety-Kleen Systems, Inc.
2918 Worthen Avenue, Los Angeles, California 90039

Dear Sir/Madame:

In accordance with federal, state, and local requirements, please find enclosed a copy of the Safety Kleen Emergency Contingency Plan and an updated Emergency Notification List for the subject facility. As the Emergency Responders for this facility, please update your records, and notify us if you have any additional requirements or questions.

If you should have any additional questions or comments pertaining to this notification, please feel free to contact Gabriel Medel, the primary Emergency Coordinator, at 323-595-1478 or me at 480-940-7202

Sincerely,

Gabriel Medel

Neil Smith
Senior Environmental, Health and Safety Manager
Safety-Kleen Systems, Inc.

Enclosure

SAFETY-KLEEN CORP.
2918 WORTHEN AVENUE LOS ANGELES, CA 90039 323/660-9562 FAX 323/660-2075

APPENDIX X-4

Emergency Notification List

Emergency Notification List

Safety-Kleen Systems, Inc
2918 Worthen Ave.
Los Angeles, CA 90039
Gate Code 966*
(323) 660-9562 – Office
(323) 660-2075 - Fax

I. Facility Emergency Coordinators

Primary:	Secondary:
Gabriel Medel	Theresa Hernandez
Branch General Manager	Branch Sr. Admin
(323) 595-1478 – cell	(323) 240-6535-Cell

II. Local Emergency Response Team

Los Angeles Fire Department	911 or 213-485-6185
Los Angeles Police Department	911 or (213) 485-2563
Glendale Memorial Hospital	(818) 502-1900

III. Additional Emergency Notification Phone Numbers

Internal: Safety-Kleen's 24 Hour Emergency Telephone (800) 468-1768

External:

National Response (NRC) 24-Hour	(800) 424-8802
California Emergency Management Agency – 24-Hour	(800) 852-7550
Cal/EPA Department of Toxic Substances Control	(818) 551-2800

Revised August 2018 (To be implemented when permit is renewed)

Emergency Notification List

With Coordinators home addresses- do not publish

Safety-Kleen Systems, Inc
2918 Worthen Ave.
Los Angeles, CA 90039
(323) 660-9562 – Office
(323) 660-2075 - Fax

I. Facility Emergency Coordinators

Primary:
Gabriel Medel
Branch General Manager
645 Duff Ave
La Puente, CA 91744
(323) 595-1478 – cell

Secondary:
Theresa Hernandez
Branch Sr. Admin
18172 Lanaca St.
La Puente, CA 91744
(323) 240-6535-Cell

II. Local Emergency Response Team

Los Angeles Fire Department	911 or 213-485-6185
Los Angeles Police Department	911 or (213) 485-2563
Glendale Memorial Hospital	(818) 502-1900

III. Additional Emergency Notification Phone Numbers

Internal: Safety-Kleen's 24 Hour Emergency Telephone (800) 468-1768

External:

National Response (NRC) 24-Hour	(800) 424-8802
California Emergency Management Agency – 24-Hour	(800) 852-7550
Cal/EPA Department of Toxic Substances Control	(818) 551-2800

Revised August 2018 (To be implemented when permit is renewed)

PART XI - CLOSURE PLAN

PART XI - CLOSURE PLAN

A. Closure Plan

The closure plan describes activities necessary to close the facility. The facility will be closed in accordance with the standards set forth in Title 22 66264.111 such that the need for further maintenance is minimized, and the possibility of future contamination from the facility is controlled, minimized, or eliminated to the extent necessary to protect human health and the environment. Closure of the facility will be carried out in accordance with the steps outlined in this plan and applicable Federal and State regulations. Safety-Kleen does not anticipate any partial closure activities (i.e., closure of a unit). However, this plan may be used should any unit require closure during the life of facility. A copy of the approved Closure Plan and all revisions to the plan shall be kept at the facility until closure is completed and certified. Following are facility identification information:

Location Address: Safety-Kleen Systems, Inc.
Los Angeles Service Center
2918 Worthen Avenue
Los Angeles, California 90039

U.S. EPA I.D. No.: CAT 000613935

Closure of this facility will include decontamination of the following:

Tank Storage: One nominal 12,000-gallon double-walled UST used to store spent parts washer solvent.

Return/Fill Shelter: Two drum washer units (155 gallons each) and the Return/Fill Shelter (310 gallons total).

Container Storage: Three container storage areas (Units A, B and C) with a total waste storage capacity of 5,540 gallons. The capacity of each storage area is as follows:

- Unit A – 1,730 gallons
- Unit B – 3,810 gallons (combined capacity of Units B and C)
- Unit C

B. Maximum Waste Inventory

The maximum waste inventory at the facility is 17,850 gallons based on the following unit capacities:

a) **Tanks--**One nominal 12,000 gallon underground waste storage tank used to store spent parts washer solvent.

b) **Drum Washers in Return/Fill Structure--**Two drum washers with a maximum capacity of approximately 155 gallons each.

c) **Containers--**5,540 gallons of drummed waste in three container storage areas.

Information on waste types is included in Section 1 of this Operation Plan.

C. Schedule for closure

An anticipated year of closure is 2050. Safety-Kleen shall notify DTSC at least 60 days prior to the date of expected closure.

For complete closure of the facility, Safety-Kleen will remove all hazardous wastes from the site in accordance with the approved closure plan within 180 days of receiving the final volume of hazardous wastes. The California State Department of Toxic Substances Control may approve a longer period if Safety-Kleen demonstrates that:

(1) The activities required to comply with this paragraph will, if necessary, take longer than 180 days to complete or the following requirements are met;

(2) The facility has the capacity to receive additional wastes;

(3) There is a likelihood that a person other than Safety-Kleen will recommence operation of the site;

(4) Closure of the facility is incompatible with continued operation of the site. In this case, Safety-Kleen will take all steps necessary to prevent threats to human health and the environment.

Safety-Kleen will complete closure activities in accordance with the approved closure plan and within 180 days after receiving the final volume of wastes at the facility or within 180 days after approval of the closure plan, whichever is later. A closure schedule is included as Exhibit X-1. Should remedial activities be required, Safety-Kleen may request an extension to the closure period.

D. Closure Procedures

Facility closure will be implemented in accordance with this plan and any subsequent modifications, as well as any follow-up correspondence/clarification submitted prior to implementation of closure. The contractor selected to implement closure will also be required to prepare a health and safety plan in accordance with applicable regulations for their personnel. The health and safety plan shall be kept on-site during the closure activities.

At closure, the following will generally be necessary to remove hazardous waste andwaste residues: 1) initial waste inventory removal, 2) removal of residual wastes, 3) decontamination of the units, and 4) removal of hazardous and decontamination wastes from the site. These procedures are briefly described below.

1. Inventory Removal Procedures

During closure of the facility, hazardous wastes will be transported off site for recycling and/or disposal in accordance with applicable procedures. For the

purposes of this closure plan and associated closure cost estimate, it is assumed that waste inventory will be transported to and offsite permitted treatment, stoage and disposal (TSD) facility. The following procedures will be implemented during inventory removal:

Spent parts washer solvent and tank bottom sediments will be removed from the underground storage tanks via pumps, tanker truck, or similar to the extent possible. The wastes will either be transferred to containers or if a tanker truck is used, transported directly offsite under manifest to a permitted TSD facility. Spent parts washer solvent sediments will be removed from the drum washers by shovel and placed in containers. The containers will be appropriately sealed and labeled. The containers will then be manifested off-site to a TSD facility.

Containers within the storage areas will be appropriately labeled, packaged, manifested, and transported in accordance with procedures detailed throughout this Operation Plan. The containers will then be manifested off-site to a TSD facility.

2. Unit Decontamination Procedures

The following procedures will be implemented to decontaminate each of the respective waste management units:

Tank-- After removal of free liquids and sludges during inventory removal, the tank, piping and appurtenances will then be cleaned with a detergent-water solution and high pressure spray, then triple rinsed. Decontamination wastes may be collected using a tanker truck, vac truck, or similar, or may be pumped into other appropriate containers. It is anticipated that approximately 800 gallons of rinsate with be generated. The rinsate will be appropriately labeled and manifested offsite for treatment and/or disposal. Alternatively, the rinsate will be sampled and analyzed for waste characteristics and appropriately managed pending receipt of the analytical results.

Safety-Kleen anticipates that the underground tank will be scrapped following removal. Therefore, a rinsate sample will not be collected. A certificate of destruction will be provided in the closure report.

Drum Washers--After removal of the spent parts washer solvent and sediments, the drum washers will be cleaned with a detergent-water solution and triple rinsed with clean water. The drum washers consist of a metal container with rollers and brushes that clean the drum, a sediment screen and piping which leads to the waste UST. The rinsate will either be allowed to flow through the drum washers and piping and collected in the spent parts washer underground storage tank, or pumped out of the drum washers directly into a tanker truck or containers. It is anticipated that approximately 800 gallons of rinsate will be generated to clean the drum washers and containment. The rinsate will either be labeled and manifested for off-site treatment and/or disposal, or sampled and analyzed to determine whether hazardous characteristics are present and appropriately managed.

If the drum washers are to be saved for potential reuse, a sample will be collected of the final rinsate and analyzed for VOCs, SVOCs and metals. The results of the rinsate analysis will be compared to appropriate risk based screening levels. Comparison to risk based levels is a conservative approach to document whether hazardous wastes have been removed during cleaning. Should detected constituent concentrations meet risk based levels, or are similar to background levels (i.e., similar to constituents detected in a blank tap water sample), the decontamination procedures will have been adequate. Alternatively, the drum washer unit(s) may be scrapped. If scrapped, rinsate sampling will not be necessary, and a certificate of destruction will be provided.

Containment for the return/fill structure is provided by a concrete slab with sump and concrete curbing. An elevated dock structure rests on the containment. The floor of the elevated dock is metal grating. The containment beneath the dock structure in the return/fill area will be inspected to identify any non-sealed cracks or gaps in the containment. If found, cracks or gaps will be sealed prior to decontamination to prevent migration of decontamination wastes outside of the containment. The containment area may also be dry-swept to remove loose dirt and debris prior to cleaning. The containment area and elevated dock structure will then be cleaned with a detergent-water solution and triple rinsed with clean tap water. The rinsate will be collected in the pans and pumped into containers. Following decontamination, the metal dock structure will either be removed and scrapped or left in place. It is assumed the concrete containment will be left in place at closure therefore, a representative rinsate sample will be collected and and analyzed for VOCs, SVOCs and metals to determine effectiveness of decontamination as described above.

The containers of rinsate will be managed as a hazardous waste representative of wastes managed within the tank system. Alternatively, the wash/rinse water may be sampled and analyzed for waste characteristics and appropriately managed pending the analytical results.

Container Storage Areas--After inventory removal, the concrete floors and containment sumps in the container storage areas will be inspected to identify any non-sealed or through-going cracks or gaps in the containment for future sampling (as described below). The container storage areas may be dry-swept to remove loose dirt and debris prior to cleaning. The floor and containment sumps will then be cleaned with a detergent-water solution and triple rinsed with clean tap water. The rinsate will be collected in the sumps and pumped into containers. It is anticpated that less than 500 gallons of rinsate will be generated during closure of the container storage areas.

A sample of the final rinsate from each container storage area will be collected for chemical analysis to verify removal of hazardous waste following cleaning. The samples will be analyzed for VOCs, SVOCs and metals. The results of the rinsate analysis will be compared to appropriate risk based screening levels to determine the effectiveness of the decontamination activities. Should detected constituent concentrations meet risk based levels, or are similar to background levels, the decontamination procedures will have been adequate.

The containers of rinsate will be managed as a hazardous waste representative of wastes managed within the container storage areas. Alternatively, the wash/rinse water may be sampled and analyzed for waste characteristics and appropriately managed pending the analytical results.

Equipment Decontamination--All other equipment not described above, will be decontaminated using the following guidelines. Small equipment (such as shovels, squegees and other hand tools) may be decontaminated in a 55-gallon drum or other suitable containment device. Alternatively, equipment may be decontaminated within one of the facility's containment structures (i.e., container storage area, drum washer, etc.) during unit decontamination.

Cleaning Agents/Rinse Water--All cleaning agents used for decontamination will be a commercially available detergent and tap water solution. Rinse water will be tap water available at the site.

E. Final Disposition of Waste Management Units Following Decontamination

After decontamination of the units at the facility as described above, the following demolition and removal activities may be implemented:

Tank-- In addition to the RCRA Closure requirements, Safety-Kleen will also comply with all appropriate state and local regulations during tank removal, including obtaining appropriate State/local agency permits prior to tank removal, if required.

After decontamination of the tank, the interior space of the tank will be monitored for organic vapors. If required by local codes, dry ice may be added to the tanks to purge any remaining vapors and displace oxygen. The tank purging activities, if determined to be necessary, will be coordinated with and approved by the local Fire Department personnel or other Agency with jurisdiction.

To remove the tank, first, the overlying concrete slab will be broken to expose the tank and backfill. The concrete may be stockpiled on plastic and covered pending disposal, or directly placed into trucks or roll-off bins and transported offsite for recycling or disposal.

Soils surrounding the tank will then be excavated. During excavation, the soil will be screened for any potential contaminated soil. Screening methods will include visual examination for discoloration and measurement of organic vapors using a PID. An aliquot of excavated soil may be placed in a plastic bag, and sealed. The PID probe will be inserted into the bag and the reading will be recorded. Any potentially contaminated soil may be stockpiled separately on 6-mil plastic and covered pending sampling and disposal, or directly loaded into trucks or roll-off bins and transported offsite in accordance with applicable regulations.

The tanks and all piping will be removed from the excavation, rendered un-useable and transported off site for recycling. Safety-Kleen will provide a Certificate of Destruction for the tank in the final closure certification report.

Following excavation sampling activities (described below), the excavation shall be filled, compacted, and repaved to match existing grade. Clean soils from the excavation as well as other clean fill, imported from an off-site source may be used. The fill shall be placed in lifts no greater than 1 foot and compacted to prevent settlement of the subgrade. A pavement layer may be placed to match existing site conditions.

Drum Washer and Return/Fill Dock--At final closure, drum washers and dock structure will be fully decontaminated as described above, and either reused at this or another Safety-Kleen facility or scrapped.

Container Storage Areas-- Safety-Kleen does not anticipate that demolition of the structures will be necessary. If soil sampling (discussed below) beneath the concrete flooring shows evidence of leakage from the container storage area, Safety-Kleen will evaluate appropriate remediation techniques. However, because the container storage area floors are continually inspected for cracks and gaps and any accumulated liquids in the secondary containment are promptly removed, the potential for liquids migrating through the floor requiring subsequent remediation is low.

F. Soil Sampling at Closure

The underground storage tank, drum washers and container storage area have secondary containment and therefore, Safety-Kleen does not expect any impacted soil in these areas. However, underlying soils will be sampled from these areas to verify whether impacts are absent/present in accordance with DTSC requirements. Soil sampling performed at closure will generally consist of the following procedures:

Tank--After the tank has been removed, the excavation will be secured and will be visually inspected for evidence of impacted soil. If anticipated to be impacted, additional soils may be excavated for offsite disposal. At the excavation limits, six representative soil samples, one from each face and two from the bottom of the excavation will be collected approximately 6 inches into the exposed face of the sidewall or floor. These samples will be analyzed for parameters in Table XI-1.

Additional sample(s) may be collected from excavated soils for disposal criteria (in accordance with disposal facility requirements), or to determine if suitable for reuse as backfill. A representative sample, compiled from aliquots within the soil stockpile is sufficient to determine suitability for reuse or disposal. The excavated soil will be sampled for reuse in accordance with local CUPA requirements. At a minimum, one composite sample (collected from 3-4 aliquots from within the stockpiled material) will be collected for analysis as shown in Table XI-1 line 2. If results of the soil sample analysis indicate the soil does not contain elevated concentrations of constituents, the stockpiled soil may be used as backfill for the excavation. Alternatively, excavated

soils may be directly loaded into trucks or roll-off bins and disposed offsite in accordance with applicable regulations.

Should groundwater with evidence of free floating material or a sheen be encountered during excavation activities, attempts will be made to evacuate the material from the excavation, to the extent practical. A pump, free product skimmer or other suitable device may be used to recover impacted groundwater and free product if present. The water and product will be containerized, sampled, analyzed and transported to a permitted facility for reclamation or treatment.

Drum Washers and Return/Fill Structure-- The condition and potential future use of the containment pans of the return/fill structure will evaluated at closure. The underlying concrete slab will be inspected for cracks, gaps stained areas and/or low points. Two locations within the area will be chosen to core through the concrete slab and sample the underlying soils. The sample locations will be chosen based on the above inspection and will be sited in areas where there may have been a loss of containment integrity. If the inspection of the slab shows it to be free of through-going cracks, gaps, staining, etc., then a sample will be collected from beneath or adjacent to the drum washers. Soil analysis will be conducted in accordance with the parameters in Table XI-1.

Container Storage Area(s)--The concrete flooring of the container storage areas will be inspected for cracks, gaps stained areas and/or low points. A minimum of two locations within each storage area will be chosen to core through the concrete floor and sample the underlying soils. The sample locations will be chosen based on the above inspection and will be sited in areas where there may have been a loss of containment integrity. If the inspection of the floor shows it to be free of cracks, gaps, staining, etc., then the sample locations will be biased toward low areas of the containment (e.g., containment trenches). Soil analysis will be conducted in accordance with the sampling parameters described in Table XI-1.

Background Samples--In addition to the soil samples described above, additional soil samples will be collected from an outdoor area of the facility away from any hazardous waste storage units to establish facility background soil concentrations. The samples collected for background purposes will be analyzed in accordance with the parameters in Table XI-1. A figure showing tentative background sampling locations is attached.

G. Vapor Sampling at Closure

S-K will collect soil vapor samples in accordance with DTSC requirements to supplement the soil sample results, and evaluate the potential for the vapor intrusion pathway. Soil vapor sampling performed at closure will generally consist of the following procedures:

S-K will conduct soil gas investigation activities a minimum 30 days after tank excavation backfill and repaving activities are complete. Since the purpose of the soil gas investigation is to verify the potential for the vapor intrusion pathway to affect human health, it is important that soil gas samples are representative of appropriate conditions after tank removal

activities are complete. A description of the proposed locations and field methodology are summarized below.

Vapor Probe Installation Procedures

S-K intends to install six soil gas wells at closure. One will be within each container storage area, the other three near the UST area. It is anticipated the soil gas wells will be installed near each of the sidewalls (as space and building configuratiuon allow). At least one of the UST soil gas sampling points will be installed near the return/fill structure to evaluate potential releases from both the tank and return/fill structure and piping in between. The wells will be installed in native material that gives adequate coverage of the UST area while avoiding UST excavation backfill material.

Multi-depth soil gas wells will be installed to approximately 5 ft-bgs and 15 ft-bgs (unless limited by site conditions such as shallow groundwater). This will yield 2 samples per location. Installation of soil gas wells will be performed using direct push drill methods by advancing a steel drill rod to the target depth. Soil samples will be continuously collected in acetate liners to total depth. An aliquot of each 2–foot interval will be collected and sealed in a plastic bag to perform a headspace analysis for total organic vapors (TOV) using a PID. Soil gas concentrations and a description of the soil will be recorded on field boring logs in general accordance with the Unified Soil Classification System (USCS).

Upon reaching the target total depth, the drive rod and sampler will be removed. The sampler will be disconnected from the drive rods with an expendable drive point attached. The rods will be withdrawn approximately 12 inches, disengaging the expendable drive point. A ¼-inch diameter Nylaflow tube (one for each depth), attached to a sample port, will be inserted into an open slotted polyvinyl chloride (PVC) pipe and set approximately 6 inches off the bottom. Number 3 washed aquarium sand, or equivalent will be placed through the steel rod, concurrent with its removal, until sand extends from approximately 6 inches below to 6 inches above the soil gas sampling point.

Approximately 12 inches of fine dry bentonite crumble will be placed in the hole as an annular seal and hydrated. Additional bentonite crumble will be alternately placed in the hole and hydrated concurrent with the removal of the drive rod. Once the probe is installed, and the annular seal placed, the drive rods will be removed from the hole. The remaining open hole will be filled with bentonite, hydrated in intervals, to the ground surface. The tops of the Nylaflow tubes will be equipped with a ball valve. Additional sampling procedures, as described below, will be conducted a minimum of 2 hours after temporary monitoring point installation to allow time for the seals to hydrate and for subsurface conditions to stabilize.

Before initiating soil-gas sampling activities, the static pressure or vacuum within soil-gas probes will be assessed to determine whether there are any pressure gradients that might induce soil-gas flow. Shut-in testing will then be conducted to confirm the integrity of the sample train prior to soil-gas purging and collecting the final sample for laboratory analysis. Shut-in testing will be performed by closing the ball valve to the soil-gas probe, inducing a vacuum on the sample equipment, and then closing valves at both ends, and observing the vacuum to ensure it did not dissipate. If the vacuum dissipates, the leaky component in the sample train will be identified and repaired, or replaced (if necessary) and the shut-in test will

be performed again until the sample train can hold a constant vacuum. Shut-in test results will be recorded on the soil-gas monitoring field forms.

Vapor Probe Sampling Procedures

The soil-gas wells will be purged using an approximate 200 milliliter per minute flow controller, vacuum pump, 3-liter Tedlar bag, and lung box or purge pump. After each volume of soil-gas is purged approximately 5 to 8 minutes and 1 to 1.5 liters of soil gas) the TOV concentration will be measured using a PID. In addition, oxygen, carbon dioxide, and methane concentrations in the purged sample will be measured using a fixed gas meter. Soil gases will be purged a default three volumes prior to sampling.

Helium will be used as a tracer gas for measuring the potential for leakage of ambient air through the annular seal of the soil gas probe or connections within the sampling equipment. A shroud will be placed around the each well, flow controller, summa canister, and fittings during purging. Helium gas will be added to the shroud through a small port. The concentration of helium will be recorded using a multi-gas detector to confirm that a minimum helium content of 10% was maintained beneath the shroud during purging. The range of helium maintained in the shroud will be recorded during each purge interval.

The concentrations of helium in the soil gas samples recovered in the Tedlar bag during each purge interval will be screened using the multi-gas detector. The concentrations of helium in the soil gas sample will be confirmed to be less than 5% of the concentration in the shroud. If the helium concentration in the soil gas sample exceeds 5% of the shroud concentration, the probe and sampling equipment will be isolated at points along the sample train and inspected for leaks, repaired or replaced as needed, and additional purging will be conducted to ensure collection of a representative soil gas sample.

Upon removal of three purge volumes and confirming integrity of the probe and sampling equipment using helium as a tracer gas, the soil gas sample will be collected. The sample will be collected using the same methodology for purging the soil gas probe. Samples for VOCs and laboratory confirmation of the helium concentration will be collected in a pre-evacuated 1-liter Summa® canister with a 5-micron in-line filter and flow controller (approximately 200 milliliters per minute). The Summa® canister, in-line filter, and flow controller will be placed beneath the shroud and a helium content of at least 10% will be maintained during collection of the final soil gas sample. Following completion of sampling activities, the ball valve on the Summa® canister will be closed and capped. Soil gas samples will be collected from the 5 ft-bgs port and the 15 ft-bgs port for each soil gas well that was installed.

Soil gas samples will be submitted for analyses of VOCs (Method TO-15) and helium (Method 3C). VOC and helium samples will be collected in batch clean certified summa canisters with batch clean certified flow controllers. Soil gas samples will be submitted to qualified laboratory under chain of custody protocol. VOC results will be used to determine potential soil gas concentrations. Helium will be used as a tracer gas during soil-gas sampling and the results will be used to evaluate potential leakage of ambient air into the soil gas sample.

H. Closure Certification

At the conclusion of the initial closure activities, the results will be presented in a closure report. Information contained in the closure report will include a brief site history, site plan, closure field notes, documentation of decontamination procedures, documentation of tank removal, photo-documentation, soil/soil vapor sampling locations, laboratory analytical reports, tabular summaries of analytical results, volumes of wastes removed, copies of waste manifests, etc. Any deviations from the approved closure plan will also be documented in the report. The closure report will be submitted within 60 days of completion of the initial closure activities (i.e., 60 days following receipt of complete and accurate laboratory results). If the closure results indicate that the appropriate closure criteria have been met (i.e., rinsate samples verify that the units have been appropriately decontaminated, and the results of underlying soil/soil gas samples are non-detect, within the range of site-specific background, or within the range of any DTSC-approved or accepted health-based screening or corrective action levels), SK shall submit to DTSC certification, both by SK and a qualified independent professional engineer registered in California, that the facility has been closed in accordance with the approved closure plan. The closure certification will be presented in a Closure Certification Report, which will be prepared in accordance with applicable portions of Title 22 CCR 66264.115.

If the initial closure results warrant further evaluation (i.e., closure soil/soil gas sample results are above non-detect, site-specific background, or above DTSC-approved or accepted health-based screening or corrective action levels), the closure report will include a proposed plan for future activities, rather than a closure certification statement. Possible future activities may include preparation of a health-based risk assessment to further evaluate and compare the closure data, or additional assessment to verify potential impacts at the site.

I. Post-Closure Plan/Contingent Post-Closure Plan

Safety-Kleen anticipates that the facility may be clean closed. Hazardous wastes and waste residues will be removed during closure. Therefore, post-closure is not applicable at this time.

J. Closure Cost Estimate

The closure cost estimate is included in Appendix XI-1. The closure cost estimate is representative of activities necessary to close/decontaminate constructed units at the facility. The original closure cost estimate amount was approved in DTSC correspondence dated January 6, 2006.

K. Post-Closure Cost Estimate

Since Safety-Kleen anticipates clean closure of the facility, this section is not applicable at this time.

L. Closure Plan Amendment

Safety-Kleen may amend the Closure Plan at any time during the active life of the facility. Safety-Kleen shall amend the plan whenever changes in operating plans or facility design

affect the Closure Plan, or whenever there is a change in the expected year of closure. The request for modification of the Closure Plan shall be made within 60 days prior to the change in plans or design occurs or no later than 60 days after an *unexpected* event has occurred which has affected the closure plan.

Table XI-1.
Parameters and Test Methods

Sample Type	Parameter	EPA Test Method
Rinsate from Container Storage Area	Semivolatile Organic Compounds Volatile Organic Compounds Metals	8270 8260 8 RCRA Metals by EPA 6000/7000 series methods
Soil Samples From beneath Tank, Return/Fill and Container Storage Area	Semivolatile Organic Compounds Volatile Organic Compounds Metals	8270 5035/8260 8 RCRA Metals by EPA 6000/7000 series methods
Soil Vapor Samples	Voltile Organic Compounds Helium (tracer gas)	TO-15 Method 3C

FIGURE XI-1

TENTATIVE BACKGROUND SAMPLING LOCATION.

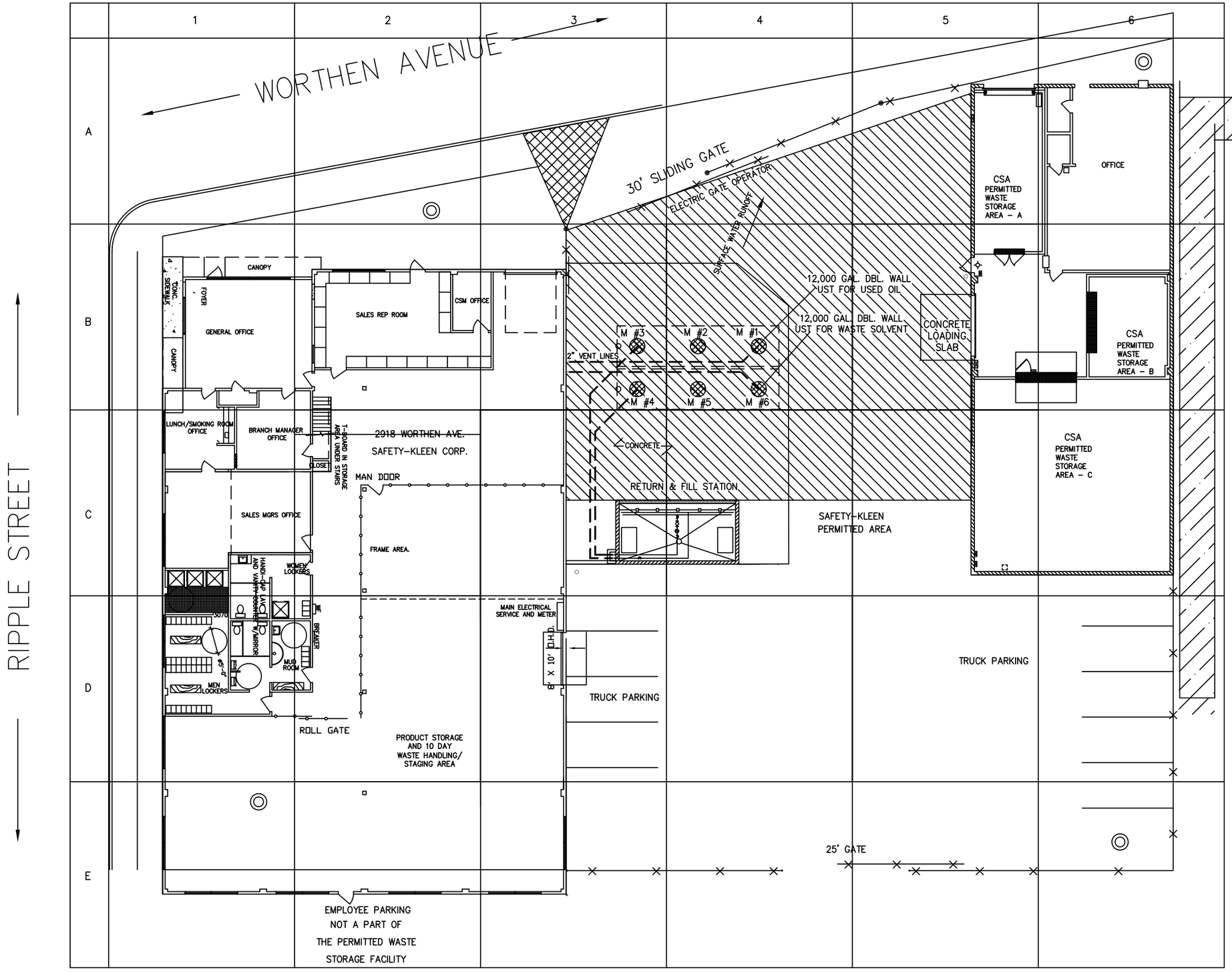

◎ TENTATIVE BACKGROUND SAMPLING LOCATIONS- SUBJECT TO CHANGE BASED ON ENGINEER INSPECTION AT CLOSURE

FIGURE XI-1

NO.	DESCRIPTION	BY	CHK	APPR	DATE
A	ADD SAMPLING LOCATIONS	JEK	NT	NT	051419

REVISIONS

PROPRIETARY STATEMENT

THIS DRAWING IS THE EXCLUSIVE PROPERTY OF SAFETY-KLEEN SYSTEMS, INC. AND IS PROPRIETARY AND CONFIDENTIAL INFORMATION. THIS DRAWING AND THE INFORMATION CONTAINED THEREIN MUST NOT BE DUPLICATED, USED, DIVULGED, REPRODUCED, COPIED, DISCLOSED OR APPROPRIATED IN WHOLE OR IN PART FOR ANY PURPOSE OTHER THAT AS EXPRESSLY AUTHORIZED BY SAFETY-KLEEN SYSTEMS, INC. THIS DRAWING MUST BE RETURNED PROMPTLY UPON REQUEST.

TITLE

TENTATIVE BACKGROUND SAMPLING LOCATIONS

SAFETY-KLEEN SYSTEMS, INC.
2600 N. CENT. EXPRESSWAY STE 400 RICHARDSON, TX. 75080
PHONE 800-669-5740

SCALE	BY	CHKD	P.E. APPR	DP. APPR	DATE
1"=20'	JEK	NT	NT	NT	5/14/19

SERVICE CENTER BRANCH AT: LOS ANGELES, CA

STD-DWG-REV NO.: 7116-SP00-011

APPENDIX XI-1

CLOSURE SCHEDULE AND COST ESTIMATE

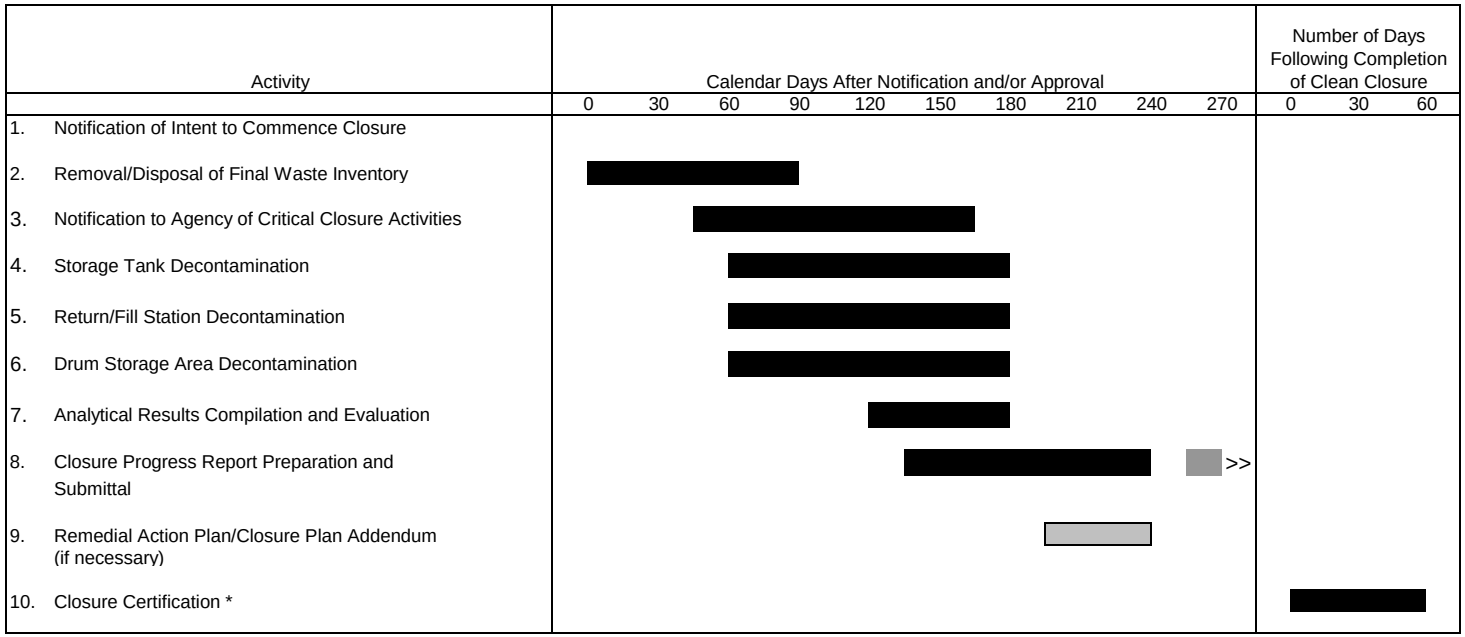

Notes:

>>> Indicates that this activity continues until certification of "clean closure."

Indicates an optional activity based on the closure analytical results.

* If no impacts are detected during the decontamination activities, closure certification will be submitted within 60 days of the completion of closure activities.

Closure Plan Exhibit 1: Tentative Closure Completion Schedule, Safety-Kleen Systems, Inc. Service Center, **[Los Angeles, CA]**

Table 1. Closure Cost Estimate Worksheet, Safety-Kleen Branch Service Center, **[Los Angeles, CA]**

Activity	Category	Hourly Rate or Unit Charge	Hours or Unit Estimate	Subtotal Cost
1. INVENTORY REMOVAL				
Assumptions			**Capacity (gallons)**	
- Waste mineral spirits tank(s) is full				
-Tank One			12000	
	Total Tank Capacity		12000	
- Return/Fill station is full				
-Maximum capacity of drum washers added to waste mineral spirits tank quantity			310	
- Container storage area(s) full				
-CSA A			1730	
-CSA B			3810	
-CSA C Total capacity of Units B and C combined is 3,810 gallons			0	
	Total CSA Capacity		5540	
Subcontractor Costs				
- Transfer tank contents to tankers				
Tank Capacity (total gallons)			12310	
Work Rate to Unload Tank Capacity (hours per gallon)			0.0003	
Total Hours to Unload			3.7	
Labor and equipment rate to unload (PPE Level D) and cost	Labor/equipment	$175.95	3.7	$650
- Transport waste mineral spirits to a TSD for treatment/disposal				
Number of tanker trailers required (6,000 gallons max each load)			3	
Cost per mile =$5.64/mile				
Mileage = 300 miles (Number in second column is 300 miles x number trucks)	Transport = 300 miles each	$5.64	900	$5,076
Disposal/treatment cost (per gallon - low cost based on suitability for fuel)	TSD @$0.45/gallon	$1.670	12310	$20,558
- Transfer drums from CSA(s) to trucks				
Labor/Equipment (PPE Level D)	Labor/equipment per drum	$3.57	101	$361
(Number in second column is number of drums determined from total CSA capacity)				
- Transport drums to TSD for Treatment/Disposal				
Total Number of Drums (Number is total of CSA drums and Flam Shed drums)			101	
Total Number of Trucks Required to Transport Drums (84 per truck max)			2	
Cost per mile =$5.64/mile				
Mileage = 300 miles (Number in second column is 300 miles x number of trucks)	Transport trailer(s) x 300 miles	$5.64	600	$3,384
Disposal/treatment cost (per drum - average cost)	TSD @ $179/drum	$179	101	$18,079
Activity 1. Subtotal				$48,107
2. UNDERGROUND STORAGE TANK DECONTAMINATION AND REMOVAL				
Assumptions:				
- The tank, piping and appurtenant equipment are decontaminated and removed				
- Assumes 100 feet of piping removed and 12,000 gallon UST as defaults				
- Assumes 6 soil samples required, 1 from each sidewall and 2 from floor				
- Assumes excavated soil to remove tank is used as backfill (one confirmation sample required), plus imported backfill to fill tank displacement void				
- Assumes asphalt paving				
- Four (4) additional soil samples added for background analysis				
- Tank Interior Square Footage (based on tank volume)			**Square Footage**	
- Tank 1			903	
	Total Tank Interior Square Footage		903	
Prime Contractor Costs				
-Costs for oversight and engineers inspection included in Closure Certification Activity below				
- Collect 6 Soil Samples Each side wall (4) and 2 beneath waste tank bottom				
- Collect one sample from excavated material to reuse as backfill				
- Collect four background samples				
Work Rate for Sampling (hours per sample)			0.5000	
Number of Samples			11	
Labor and equipment per work hour (PPE Level D)	Labor/equipment	$91.88	5.50	$505
Subcontractor Costs				
- Decontaminate waste UST, piping and appurtenant equipment				
Work Rate to Pressure Wash (hours per square foot)			0.0405	
Area of Tanks to be decontaminated			903	
Labor and equipment for tank decon (PPE Level C)	Labor/equipment	$97.23	37	$3,555
- Tank Purging with Dry Ice	lump sum per tank		$717	
- Excavation, Dissasembly and Loading	lump sum per tank		$12,355	
- Tranpostation and Disposal/Recycling of Overlying Concrete	lump sum per tank		$7,296	
- Tranportation/Disposal of Tank as Scrap	lump sum per tank		$1,500	
- Backfill and Grading	lump sum per tank		$3,100	
- Asphalt Paving	lump sum per tank		$8,200	
	subtotal per tank		$33,168	
Total for one tank				$33,168
Laboratory Subcontractor Costs				
- Analyze soil sample(s) from containment area for VOCs, SVOCs and RCRA metals	VOCs @ $189/sample			
- Analyze soil sample from excavated material for reuse as backfill	SVOCs @ $359/sample			
	8 RCRA Metals @ $110/sample			
	Total per sample cost	$658	11	$7,238
Activity 2. Subtotal				$44,466

Table 1. Closure Cost Estimate Worksheet, Safety-Kleen Branch Service Center, **[Los Angeles, CA]**

Activity	Category	Hourly Rate or Unit Charge	Hours or Unit Estimate	Subtotal Cost
3. DECONTAMINATE THE RETURN/FILL STATION				
Assumptions:				
- Decontamination shall consist of washing with detergent/water solution and rinsing with high-pressure spray				
- Return/Fill structure and dock area will remain in place following decontamination				
- Drum washers to remain in place or sent offsite for reuse following decontamination				
- Rinsate sampling required from each drum washer to remain in place or sent offsite for reuse, and from containment				
- Assumes 2 soil samples (1 from beneath each drum washer) required from beneath containment area. Actual number of samples will be based on engineer's inspection				
- Square footage used for decontamination includes containment, dock and drum washer units			**Square Footage**	
			1000	
Prime Contractor Costs				
-Costs for oversight and engineers inspection included in Closure Certification Activity below				
- Collect Rinsate Samples (1 per drum washer plus containment)				
Work Rate for Sampling (hours per sample)			0.5000	
Number of Samples			3	
Labor and equipment per work hour (PPE Level D)	Labor/equipment	$91.88	1.50	$138
- Drilling for Soil Samples (2.5 in boring to 1 ft each)				
Work Rate for Drilling (hours per foot)			0.3050	
Number of Feet (subslab sample depth = 1 foot each)			2	
Labor and equipment per work hour (PPE Level D)	Labor/equipment	$146.29	0.61	$89
- Collect Soil Samples				
Work Rate for Sampling (per sample)			0.5000	
Number of Samples			2	
Labor and equipment per work hour (PPE Level D)	Labor/equipment	$91.88	1.00	$92
Subcontractor Costs				
- Decontaminate drum washers, dock structure and containment				
Work Rate to Pressure Wash (hours per square foot)			0.0405	
Area of Return/Fill to be decontaminated			1000	
Labor and equipment for tank decon (PPE Level C)	Labor/equipment	$97.23	41	$3,938
Laboratory Subcontractor Costs				
- Analyze 1 rinsate sample per drum washer and containment for VOCs, SVOCs and RCRA metals	VOCs @ $189/sample SVOCs @ $359/sample 8 RCRA Metals @ $110/sample Total per sample cost	$658	3	$1,974
- Analyze soil sample(s) from containment area for VOCs, SVOCs and RCRA metals	VOCs @ $189/sample SVOCs @ $359/sample 8 RCRA Metals @ $110/sample Total per sample cost	$658	2	$1,316
	Activity 3. Subtotal			$7,547
4. DECONTAMINATE CONTAINER STORAGE AREA(S)				
Assumptions:				
- Decontamination shall consist of washing with a detergent water solution and rinsing with a high-pressure spray				
- CSA(s) to remain in-place following closure				
- Decontamination of CSA includes floor, curbing and containment trenches				
- Assumes 1 rinsate and 2 soil samples required per CSA. Actual number of soil samples will be based on engineer's inspection.				
- CSA Containment Square Footage			**Square Footage**	
- CSA A			476	
- CSA B			294	
- CSA C			1387	
	Total CSA Square Footage		2158	
Prime Contractor Costs				
-Costs for oversight and engineers inspection included in Closure Certification Activity below				
- Collect Rinsate Samples (1 per CSA)				
Work Rate for Sampling (hours per sample)			0.5000	
Number of Samples			3	
Labor and equipment per work hour (PPE Level D)	Labor/equipment	$91.88	1.50	$138
- Drilling for Soil Samples (2.5 in boring to 1 ft each)				
Work Rate for Drilling (hours per foot)			0.3050	
Number of Feet (subslab sample depth = 1 foot each x number of samples)			6	
Labor and equipment per work hour (PPE Level D)	Labor/equipment	$146.29	1.83	$268
- Collect Soil Samples				
Work Rate for Sampling (hours per sample)			0.5000	
Number of Samples			6	
Labor and equipment per work hour (PPE Level D)	Labor/equipment	$91.88	3.00	$276
Subcontractor Costs				
- Decontaminate CSA(s)				
Work Rate to Pressure Wash (hours per sqaure foot)			0.0405	
Total Area of Permitted CSA(s) to be decontaminated			2158	
Labor and equipment for CSA decon (PPE Level D)	Labor/equipment	$65.77	87	$5,747
Laboratory Subcontractor Costs				
- Analyze rinsate sample(s) from each CSA for VOCs, SVOCs and RCRA metals	VOCs @ $189/sample SVOCs @ $359/sample 8 RCRA Metals @ $110/sample Total per sample cost	$658	3	$1,974
- Analyze 2 soil sample(s) from each CSA for VOCs, SVOCs and RCRA metals	VOCs @ $189/sample SVOCs @ $359/sample 8 RCRA Metals @ $110/sample Total per sample cost	$658	6	$3,948
	Activity 4. Subtotal			$12,350

Table 1. Closure Cost Estimate Worksheet, Safety-Kleen Branch Service Center, **[Los Angeles, CA]**

Activity	Category	Hourly Rate or Unit Charge	Hours or Unit Estimate	Subtotal Cost
5. CONTAINERIZE, STAGE, TRANSPORT AND DISPOSE OF DECONTAMINATION WASTES				
Assumptions:				
- Amount of decon wash water generated derived from previous closure experience. Quantity based on approximately 0.8 gal/ sq ft for tank systems and 0.1 gal/sq ft for containment area floors				
Unit Description	Square Footage	Number Gallons		Number Drums
UNDERGROUND STORAGE TANK DECONTAMINATION AND REMOVAL	903	722		14
DECONTAMINATE THE RETURN/FILL STATION	1,000	800		15
DECONTAMINATE CONTAINER STORAGE AREA(S)	2,158	216		4
PPE, CONSUMABLES, DEBRIS	NA	NA		5
- Purchase 55-gallon drums to containerize wash water	Drums @ $83 each	$83	38	$3,469
Subcontractor Costs				
- Transfer drums to trucks				
Labor/Equipment (PPE Level D)	Labor/equipment per drum	$3.57	38	$136
- Transport drums to TSD for Treatment/Disposal				
Total Number of Trucks Required to Transport Drums (84 per truck max)			1	
Cost per mile =$5.64/mile				
Mileage = 300 miles (Number in second column is 300 miles x number trucks)	Transport trailer(s) x 300 miles	$5.64	300	$1,692
Disposal/treatment cost (per drum - low cost based on lack of hazardous constituents)	TSD @ $90/drum	$90	33	$2,970
Disposal/treatment cost for PPE drums (assumed haz to landfill)	TSD @$250/drum	$250	5	$1,250
	Activity 5. Subtotal			$9,517
6. CONDUCT SOIL GAS INVESTIGATION				
Assumptions:				
- Soil gas investigation conducted following initial closure activities, after tank excavation has been backfilled				
- Soil gas investigation conducted in accordance with most recent EPA and DTSC guidance				
- Soil vapor probes installed and sampled at 5 and 15 feet depths				
Prime Contractor Costs				
-Costs for oversight and engineers inspection included in Closure Certification Activity below				
- Collect Soil Gas Samples	Lump sum labor			$1,910
	Equipment			$1,000
Subcontractor Costs				
- Drill and Install Vapor Probes				
Engineering, Mobe, Drilling 4 wells to 15 feet and materials	Lump Sum labor/equipment			$7,383
				$0
Laboratory Subcontractor Costs				
- Analyze 2 samples per probe for VOCs and Helium trace gas	VOCs @ $189/sample			
	Helium $80 per sample			
	Summa Cans @ $100 per sample			
	Total per sample cost	$369	8	$2,952
	Activity 6. Subtotal			$13,245
7. CLOSURE CERTIFICATION				
Assumptions:				
- Cost Pro unit rate per unit to be closed is $4,118				
- Unit rate includes engineer inspection and decontamination oversight of each unit				
Prime Contractor Costs				
- Oversee and certify closure per unit times number of units	Project Manager/Engineer	$4,118	6	$24,708
- Units include 1 tank, 3 CSAs and 2 drum washers.				
- An additional Unit added for vapor sampling for a total of 8				
	Activity 7. Subtotal			$24,708

COST ESTIMATE ACTIVITIES SUMMARY	
1. INVENTORY REMOVAL	$48,107
2. UNDERGROUND STORAGE TANK DECONTAMINATION AND REMOVAL	$44,466
3. DECONTAMINATE THE RETURN/FILL STATION	$7,547
4. DECONTAMINATE CONTAINER STORAGE AREA(S)	$12,350
5. CONTAINERIZE, STAGE, TRANSPORT AND DISPOSE OF DECONTAMINATION WASTES	$9,517
6. CONDUCT SOIL GAS INVESTIGATION	$13,245
7. CLOSURE CERTIFICATION	$24,708
TOTAL CLOSURE COST ESTIMATE	$159,940
CONTINGENCY	10%
TOTAL CLOSURE COST WITH CONTINGENCY	$175,934

Add Inflation factors from 2010 to most recent (updated for inflation from the latest version of CostPro (6.0)

2010	1.022	$ 179,804
2011	1.012	$ 181,962
2012	1.01	$ 183,782
2013	1.021	$ 187,641
2014	1.018	$ 191,018
2015	1.014	$ 193,693
2016	1.01	$ 195,630
2017	1.013	$ 198,173
2018	1.018	$ 201,740
TOTAL CLOSURE COST ESTIMATE		**$ 201,740**

Table 1. Closure Cost Estimate Worksheet, Safety-Kleen Branch Service Center, **[Los Angeles, CA]**

Activity	Category	Hourly Rate or Unit Charge	Hours or Unit Estimate	Subtotal Cost

Notes:

- Estimate assumes that waste management units are at permitted capacity at time of closure, which is the most expensive in the facility's operating life.
- All unit rates obtained from Cost Pro version 6.0, which is designed to be represetative of 3rd party costs and includes the following:
  - Transportation @ $5.64/mile and 300 mile trip
  - Disposal for bulk liquids $1.67/gallon based on average rate from CostPro.
  - Disposal for CSA liquids $179/drum based on CostPro average disposal cost and assuming suitability of drummed waste streams as fuel.
  - Disposal of decon wash water $90/drum based on lack of hazardous constituents in waste (soapy water)
  - Subcontractor Decontamination Rate for tanks and return/fill based on PPE Level C
  - Subcontractor decontamination rates for tank containment, CSAs and Flam Shed (if applicable) based on PPE Level D
  - Prime Contractor Rates based on hourly rate for rinsate sampling, drilling and soil sample collection
  - Lab subcontractor rates for analysis of rinsate and soil samples (Assumes VOCs, SVOCs and metals)
  - Closure Certification Activity includes contractor oversight, PE integrity inspections and reporting/Certification

PART XII

FINANCIAL RESPONSIBILITY

XII. FINANCIAL RESPONSIBILITY

A. Financial Assurance Mechanism for Closure (22 CCR 66264.143, 66270.14(b)(15)) (40 CFR 264.143, 170.14(b)(15))

1. **Closure trust fund -** Not applicable.

2. **Surety Bond -** Not applicable.

   a. **Guaranteeing payment into a closure trust fund**

   b. **Guaranteeing performance of closure**

3. **Closure letter of credit -** Not applicable

4. **Closure insurance –** Financial assurance for closure is provided by an insurance policy. The provider as of 6/21/02 has been Indian Harbor Insurance Company. A copy of the most recent certificate of insurance is provided in Appendix XII-1.

5. **Financial test and corporate guarantee for closure -** Not applicable

6. **Alternative financial mechanism (non-RCRA facilities only) -** Not applicable

7. **Use of multiple financial mechanisms -** Not applicable

8. **Use of financial mechanisms for multiple facilities -** Not applicable

B. Financial Assurance Mechanism for Post-closure (22 CCR 66264.143, 66270.14(b)(16)) (40 CFR 264.145, 270.14(b)(16))

1. **Post-closure trust fund** – Not applicable

2. **Surety bond**

   a. **Guaranteeing payment into a post-closure trust fund** – Not applicable

   b. **Guaranteeing performance of post-closure** – Not applicable

3. **Post-closure letter of credit** – Not applicable

4. **Post-closure insurance –** Since Safety-Kleen intends to clean close this

facility, post-closure insurance is not applicable.

5. **Financial test and corporate guarantee for post-closure** – Not applicable

6. **Alternative financial mechanism (non-RCRA facilities only)** – Not applicable

7. **Use of multiple financial mechanisms** – Not applicable

8. **Use of financial mechanisms for multiple facilities** – Not applicable

C. Liability Coverage Mechanism
(22 CCR 66264.147, 66270.14(b)(17))
(40 CFR 264.147, 270.14(b)(17))

1. **Coverage for sudden accidental occurrences**

   a. **Insurance endorsement or certification -** In accordance with the liability requirements of Title 22, Section 66264.147, Safety-Kleen has acquired insurance coverage for sudden and non-sudden accidental occurrences arising from operations of the Service Center facility. Appendix XII-2 presents a copy of the Hazardous Waste Facility Liability Insurance. Current copies are kept on file in the Facility Operating Log. The coverage from this insurance policy is in the amount of $1 million per occurrence with an annual aggregate of $2 million; this coverage meets the minimum required to protect the safety and welfare of the people of the State of California. This coverage is updated as needed.

   b. **Financial test or corporate guarantee for liability coverage -** Not applicable.

   c. **Letter of credit -** Not applicable.

   d. **Surety bond -** Not applicable.

   e. **Trust fund -** Not applicable.

   f. **Alternative mechanism (non-RCRA facilities only) -** Not applicable.

   g. **Use of multiple insurance mechanisms -** Not applicable.

2. **Coverage for non-sudden accidental occurrence:**

a. **Insurance endorsement or certification -** In accordance with the liability requirements of Title 22, Section 66264.147, Safety-Kleen Corp. has acquired insurance coverage for sudden and non-sudden accidental occurrences arising from operations of the Service Center facility. Appendix XII-2 presents a copy of the Hazardous Waste Facility Liability Endorsements from the Greenwich Insurance Company of Connecticut for the year of this permit application. Current copies are kept on file in the Facility Operating Log. The coverage from this insurance policy is in the amount of $1 million per occurrence with an annual aggregate of $2 million; this coverage meets the minimum required to protect the safety and welfare of the people of the State of California. This coverage is updated as needed.

b. **Financial test or corporate guarantee for liability coverage -** Not applicable.

c. **Letter of credit -** Not applicable.

d. **Surety bond -** Not applicable.

e. **Trust fund -** Not applicable.

f. **Alternative mechanism (non-RCRA facilities only) -** Not applicable.

g. **Use of multiple insurance mechanisms -** Not applicable.

3. **Request for variance -** Not applicable.

APPENDIX XII-1

Insurance Certificates for Closure

PART XII

FINANCIAL RESPONSIBILITY

XII. FINANCIAL RESPONSIBILITY

A. Financial Assurance Mechanism for Closure (22 CCR 66264.143, 66270.14(b)(15)) (40 CFR 264.143, 170.14(b)(15))

1. **Closure trust fund -** Not applicable.

2. **Surety Bond -** Not applicable.

   a. **Guaranteeing payment into a closure trust fund**

   b. **Guaranteeing performance of closure**

3. **Closure letter of credit -** Not applicable

4. **Closure insurance –** Financial assurance for closure is provided by an insurance policy. The provider as of 6/21/02 has been Indian Harbor Insurance Company. A copy of the most recent certificate of insurance is provided in Appendix XII-1.

5. **Financial test and corporate guarantee for closure -** Not applicable

6. **Alternative financial mechanism (non-RCRA facilities only) -** Not applicable

7. **Use of multiple financial mechanisms -** Not applicable

8. **Use of financial mechanisms for multiple facilities -** Not applicable

B. Financial Assurance Mechanism for Post-closure (22 CCR 66264.143, 66270.14(b)(16)) (40 CFR 264.145, 270.14(b)(16))

1. **Post-closure trust fund** – Not applicable

2. **Surety bond**

   a. **Guaranteeing payment into a post-closure trust fund** – Not applicable

   b. **Guaranteeing performance of post-closure** – Not applicable

3. **Post-closure letter of credit** – Not applicable

4. **Post-closure insurance –** Since Safety-Kleen intends to clean close this

facility, post-closure insurance is not applicable.

5. **Financial test and corporate guarantee for post-closure** – Not applicable

6. **Alternative financial mechanism (non-RCRA facilities only)** – Not applicable

7. **Use of multiple financial mechanisms** – Not applicable

8. **Use of financial mechanisms for multiple facilities** – Not applicable

C. Liability Coverage Mechanism
(22 CCR 66264.147, 66270.14(b)(17))
(40 CFR 264.147, 270.14(b)(17))

1. **Coverage for sudden accidental occurrences**

   a. **Insurance endorsement or certification -** In accordance with the liability requirements of Title 22, Section 66264.147, Safety-Kleen has acquired insurance coverage for sudden and non-sudden accidental occurrences arising from operations of the Service Center facility. Appendix XII-2 presents a copy of the Hazardous Waste Facility Liability Insurance. Current copies are kept on file in the Facility Operating Log. The coverage from this insurance policy is in the amount of $1 million per occurrence with an annual aggregate of $2 million; this coverage meets the minimum required to protect the safety and welfare of the people of the State of California. This coverage is updated as needed.

   b. **Financial test or corporate guarantee for liability coverage -** Not applicable.

   c. **Letter of credit -** Not applicable.

   d. **Surety bond -** Not applicable.

   e. **Trust fund -** Not applicable.

   f. **Alternative mechanism (non-RCRA facilities only) -** Not applicable.

   g. **Use of multiple insurance mechanisms -** Not applicable.

2. **Coverage for non-sudden accidental occurrence:**

a. **Insurance endorsement or certification -** In accordance with the liability requirements of Title 22, Section 66264.147, Safety-Kleen Corp. has acquired insurance coverage for sudden and non-sudden accidental occurrences arising from operations of the Service Center facility. Appendix XII-2 presents a copy of the Hazardous Waste Facility Liability Endorsements from the Greenwich Insurance Company of Connecticut for the year of this permit application. Current copies are kept on file in the Facility Operating Log. The coverage from this insurance policy is in the amount of $1 million per occurrence with an annual aggregate of $2 million; this coverage meets the minimum required to protect the safety and welfare of the people of the State of California. This coverage is updated as needed.

b. **Financial test or corporate guarantee for liability coverage -** Not applicable.

c. **Letter of credit -** Not applicable.

d. **Surety bond -** Not applicable.

e. **Trust fund -** Not applicable.

f. **Alternative mechanism (non-RCRA facilities only) -** Not applicable.

g. **Use of multiple insurance mechanisms -** Not applicable.

3. **Request for variance -** Not applicable.

APPENDIX XII-1

Insurance Certificates for Closure

safety-kleen

PROTECTION·CHOICES·PEOPLE
MAKE GREEN WORK

VIA FEDERAL EXPRESS TRK #776982018916

November 14, 2019

Elina Kolbach
Financial Responsibility Analyst
California Department of Toxic Substances Control
8800 Cal Center Dr., 3rd Floor
Sacramento, CA 95826

RE: Closure Insurance Policy Renewal and Annual Inflation Increases
Safety-Kleen Systems, Inc.
Safety-Kleen of California, Inc.

Dear Ms. Kolbach;

Please find enclosed an original signed Certificates of Insurance for Closure and/or Post-Closure Care issued by Indian Harbor Insurance Company for the Safety-Kleen Systems, Inc. and Safety-Kleen of California, Inc. facilities listed below. The new insurance policy number is PEC0007073***18*** and it is effective November 17, 2019 through July 31, 2020.

Please note that the annual inflation increases of the closure, post-closure, and corrective action cost estimates for the Safety-Kleen Systems, Inc. and Safety-Kleen of California, Inc. facilities have been conducted and the enclosed Certificates reference the increased values. The annual inflation increases were calculated by multiplying their current 2018 cost estimates by the inflation factor 1.022. This inflation factor was provided by Ms. Karyn Chung in an email dated June 10,2019.

Facility Name	Address	City	EPA ID Number	Coverage Type	2018 Value	Inflation Factor	2019 Value
Safety-Kleen Systems, Inc.	10651 Hickson St	El Monte	CAH111000591	Closure	$6,470	1.022	$6,612
Safety-Kleen Systems, Inc.	10625 Hickson St	El Monte	CAT000613893	Closure	$412,339	1.022	$421,410
Safety-Kleen Systems, Inc.	3561 S. Maple St.	Fresno	CAD066113465	Closure	$194,244	1.022	$198,518
Safety-Kleen Systems, Inc.	139 E. 157th St.	Gardena	CAT000613919	Closure	$356,135	1.022	$363,970
Safety-Kleen Systems, Inc.	7979 Palm Ave	Highland	CAT000613927	Closure	$194,675	1.022	$198,958
Safety-Kleen Systems, Inc.	3876 Florista St.	Los Alamitos	CAD066177783	Closure	$203,024	1.022	$207,491
				Post-Closure	$317,509	1.022	$324,494
Safety-Kleen Systems, Inc.	2918 Worthen Ave	Los Angeles	CAT000613935	Closure	$209,896	N/A	$201,740*

safety-kleen
PROTECTION·CHOICES·PEOPLE
MAKE GREEN WORK

Facility Name	Address	City	EPA ID Number	Coverage Type	2018 Value	Inflation Factor	2019 Value
Safety-Kleen Systems, Inc.	400 Market St	Oakland	CAD053044053	Corrective Action	$280,265	1.022	$286,430
Safety-Kleen Systems, Inc.	1000 South I St	Reedley	CAD093459485	Corrective Action	$379,644	1.022	$387,996
Safety-Kleen Systems, Inc.	5750 Commerce Blvd.	Rohnert Part	CAT000613943	Corrective Action	$191,572	1.022	$195,787
Safety-Kleen Systems, Inc.	6000 88th St	Sacramento	CA0000084517	Closure	$697,479	1.022	$712,823
Safety-Kleen Systems, Inc.	1147 N. 10th St.	San Jose	CAD980817159	Closure	$271,065	1.022	$277,028
Safety-Kleen Systems, Inc.	2120 S. Yale St	Santa Ana	CAT000613976	Closure	$301,792	1.022	$308,431
Safety-Kleen of California, Inc.	16604 South San Pedro St	Carson	CAD981696420	Closure	$189,388.36	1.022	$193,555
Safety-Kleen of California, Inc.	Road 30B	Davis	CAD982446874	Closure	$127,492	1.022	$130,297
Safety-Kleen of California, Inc.	4139 North Valentine Ave	Fresno	CAD982446882	Closure	$101,116	1.022	$103,341
Safety-Kleen of California, Inc.	6680 Smith Avenue	Newark	CAD980887418	Closure	$1,983,800	1.022	$2,027,444
Safety-Kleen of California, Inc.	745-A West Betteravia Rd	Santa Maria	CAD982446858	Closure	$73,456	N/A	$175,361*

- Los Angeles – Closure updated during permit renewal in September 2019
- Santa Maria – Closure updated during permit renewal in August 2019

If you have any questions or concerns regarding this submittal, please feel free to contact me at harvey.pamela@cleanharbors.com or at 219-746-5050.

Sincerely,

Pamela K. Harvey

Pamela K. Harvey, CHMM
Environmental Compliance Manager

Enclosure

CERTIFICATE OF INSURANCE – CLOSURE AND/OR POSTCLOSURE

If additional space is needed, add attachment.

Insurer Name: **Indian Harbor Insurance Company**	**Insured Name:** **Clean Harbors, Inc.**
Insurer Address: **Seaview House, 70 Seaview Avenue** **Stamford, CT 06902-6040**	**Insured Address:** **42 Longwater Drive** **Norwell, MA 02061**
California License Number: **07683** ☐ **Admitted** ☒ **Excess or Surplus lines**	

Hazardous Waste Facilities/TTUs Covered:

(Enter Closure and Postclosure amounts separately. Amounts must represent the total Face Amount.)

Name	Address	Hazardous Waste Facility/TTU Identification Number	Closure Insurance Amount	Post/closure Insurance Amount
SEE ATTACHED				
Policy Number PEC000707318		Effective Date November 17, 2019	Face Amount $6,721,686	

Insurer Certification

The Insurer hereby certifies that it has issued to the Insured the policy of insurance identified above to provide financial assurance for: ☐ closure ☐ post/closure care ☒ closure and post/closure care for the facilities/TTU(s) identified above. The Insurer further warrants that such policy conforms in all respects with the requirements of California Code of Regulations, title 22, division 4.5, chapter 14 and 15, article 8, section 66264.143, subsection (e), section 66264.145, subsection (e), section 66265.143, subsection (d) and section 66265.145, subsection (d) as applicable and as such regulations were constituted on the date shown below. It is agreed that any provision of the policy inconsistent with such regulations is hereby amended to eliminate such inconsistency.

The Insurer certifies that it will not cancel, terminate, or fail to renew this policy except for failure to pay the premium, and that the automatic renewal of the policy provides the insured with the option of renewal at the face amount of the expiring policy. If there is a failure to pay the premium and the Insurer elects to cancel, terminate, or not renew the policy, the Insurer will send notice by either registered or certified mail to the owner or operator and the Department of Toxic Substances Control (DTSC). Cancellation, termination, or failure to renew may not occur, however, during the one hundred twenty (120) days beginning with the date of receipt of the notice by the owner or operator and the DTSC as evidence by the return receipt. Cancellation, termination or failure to renew will not occur and the policy will remain in full force and effect in the event that on or before the date of expiration:

(1) The DTSC deems the facility/TTU abandoned; or

(2) The permit is terminated or revoked or a new permit is denied by the DTSC; or

(3) Closure is ordered by the DTSC; or any other State or Federal agency, or a court of competent jurisdiction; or

(4) The owner or operator is named as a debtor in a voluntary or involuntary proceeding under Title 11 (Bankruptcy) U. S. Code; or

(5) The premium due is paid.

The Insurer certifies that it is:

(A) An admitted carrier, licensed to transact the business of insurance in California, or

(B) A nonadmitted carrier eligible to provide insurance as an excess or surplus lines insurer in California. Any excess or surplus insurance relied upon by the owner or operator to meet the requirements of this subsection shall be placed by and through an excess or surplus lines broker currently licensed by the California Department of Insurance, and shall be underwritten by a surplus lines insurer that is on the California Department of Insurance's List of Approved Surplus Line Insurers as being eligible to cover risks in California.

Whenever requested by the Department of Toxic Substances Control (DTSC) of the State of California, the Insurer agrees to furnish to the DTSC a duplicate original of the original policy listed above, including all endorsements thereon.

In the event this policy is used in combination with another mechanism, this policy shall be considered:
[x] primary coverage [ ] excess coverage

The parties below certify that the wording of this certificate is identical to the wording specified in California Code of Regulations, title 22, section 66264.151, subsection (e) and is being executed in accordance with the requirements of California Code of Regulations, title 22, division 4.5, chapters 14 and 15, article 8.

Authorized Signature of Insurer	**Title**
	Chief Underwriting Officer

Typed or Printed Name of Person Signing
Mary Ann Susavidge

Signature of Witness or Notary	**Date**
Lynda A. Sergeant	11-8-19

COMMONWEALTH OF PENNSYLVANIA
NOTARIAL SEAL
Lynda A. Sergeant, Notary Public
Uwchlan Twp., Chester County
My Commission Expires June 19, 2020
MEMBER, PENNSYLVANIA ASSOCIATION OF NOTARIES

EDA ID# CAT000613943
Safety-Kleen Systems, Inc.
5750 Commerce Blvd.
Rohnert Park, CA 94928
Corrective Action Amount: $195,787

EDA ID# CA0000084517
Safety-Kleen Systems, Inc.
6000 88th St.
Sacramento, CA 95828
Closure Amount: $712,823

EPA ID# CAD093459485
Safety-Kleen Systems, Inc.
1000 South I Street
Reedley, CA 93654
Corrective Action Amount: $387,996

EPA ID# CAD053044053
Safety-Kleen Systems, Inc.
400 Market Street
Oakland, CA 94607
Corrective Action Amount: $286,430

EPA ID# CAD980817159
Safety-Kleen Systems, Inc.
1147 N. 10th St.
San Jose, CA 95112
Closure Amount: $277,028

EPA ID# CAT000613976
Safety-Kleen Systems, Inc.
2120 S. Yale St.
Santa Ana, CA 92704
Closure Amount: $308,431

EPA ID# CAH111000591
Safety-Kleen Systems, Inc.
10651 Hickson St.
El Monte, CA 91731
Closure Amount: $6,612

EPA ID# CAT000613927
Safety-Kleen Systems, Inc.
7979 Palm Ave.
Highland, CA 92346
Closure Amount: $198,958

EPA ID# CAD066177783
Safety-Kleen Systems, Inc.
3876 Florista St.
Los Alamitos, CA 90720
Closure Amount: $207,491
Post-Closure Amount: $324,494

EPA ID# CAT000613935
Safety-Kleen Systems, Inc.
2918 Worthen Avenue
Los Angeles, CA 90039
Closure Amount: $201,740

EPA ID# CAD982446874
Safety-Kleen of California, Inc.
Road 30B
Davis, CA 95616
Closure Amount: $130,297

EPA ID# CAD982446882
Safety-Kleen of California, Inc.
4139 North Valentine Avenue
Fresno, CA 93722
Closure Amount: $103,341

EPA ID# CAD982446858
Safety-Kleen of California, Inc.
745-A West Betteravia Rd.
Santa Maria, CA 93455
Closure Amount: $175,361

EPA ID# CAD981696420
Safety-Kleen of California, Inc.
16604 South San Pedro Street
Carson, CA 90746
Closure Amount: $193,555

EPA ID# CAD980887418
Safety-Kleen of California, Inc.
6880 Smith Avenue
Newark, CA 94560
Closure Amount: $2,027,444

EPA ID# CAT000613893
Safety-Kleen Systems, Inc.
10625 Hickson St.
El Monte, CA 91731
Closure Amount: $421,410

EPA ID# CAD066113465
Safety-Kleen Systems, Inc.
3561 S. Maple Street
Fresno, CA 93725
Closure Amount: $198,518

EPD ID# CAT000613919
Safety-Kleen Systems, Inc.
139 E. 157th St.
Gardena, CA 90248
Closure Amount: $363,970

APPENDIX XII-2

Hazardous Waste Facility Liability Certificate of Insurance

State of California
State Water Resources Control Board
Division of Financial Assistance
P.O. Box 944212
Sacramento, CA 94244-2121

(Instructions on reverse side)

For State Use Only

CERTIFICATION OF FINANCIAL RESPONSIBILITY

FOR UNDERGROUND STORAGE TANKS CONTAINING PETROLEUM

A. I am required to demonstrate Financial Responsibility in the required amounts as specified in California Code of Regulations (CCR), Title 23, Division 3, Chapter 18, Section 2807,

☐ 500,000 dollars per occurrence
or
☒ 1 million dollars per occurrence

AND

☐ 1 million dollars annual aggregate
or
☒ 2 million dollars annual aggregate

B. _____ *hereby certifies that it is in compliance with the requirements of Section 2807,*
(Name of Tank Owner or Operator)
California Code of Regulations, Title 23, Division 3, Chapter 18, Article 3, Section 2807.
The mechanisms used to demonstrate financial responsibility as required by Section 2807 are as follows:

C. Mechanism Type	Name and Address of Issuer	Mechanism Number	Coverage Amount	Coverage Period	Corrective Action	Third Party Comp
INSURANCE	INDIAN HARBOR INSURANCE Co. 70 SEAVIEW AVE STAMFORD, CT 06902	PEC0042 03956	$1m/OCCUR $2m/AGG	11/1/19 - 11/1/20	YES	YES

Note:

Note: If you are using the State Fund as any part of your demonstration of financial responsibility, your execution and submission of this certification also certifies that you are in compliance and shall maintain compliance with all conditions for participation in the Fund. See instructions.

D. Facility Name	Facility Address
SAFETY-KLEEN SYSTEMS INC.	SEE ATTACHED
Facility Name	Facility Address
Facility Name	Facility Address

E. Signature of Tank Owner or Operator	Date	Name and Title of Tank Owner or Operator
	10/29/19	VP RISK MANAGEMENT
Signature of Witness or Notary	**Date**	**Name of Witness or Notary**
	10/29/19	Nathaniel J Wilkie

State of California
State Water Resources Control Board
Division of Financial Assistance
P.O. Box 944212
Sacramento, CA 94244-2121

(Instructions on reverse side)

For State Use Only

CERTIFICATION OF FINANCIAL RESPONSIBILITY

FOR UNDERGROUND STORAGE TANKS CONTAINING PETROLEUM

A. I am required to demonstrate Financial Responsibility in the required amounts as specified in California Code of Regulations (CCR), Title 23, Division 3, Chapter 18, Section 2807,

☐ 500,000 dollars per occurrence
or
☒ 1 million dollars per occurrence

AND

☐ 1 million dollars annual aggregate
or
☒ 2 million dollars annual aggregate

B. _____ *hereby certifies that it is in compliance with the requirements of Section 2807,*
(Name of Tank Owner or Operator)
California Code of Regulations, Title 23, Division 3, Chapter 18, Article 3, Section 2807.
The mechanisms used to demonstrate financial responsibility as required by Section 2807 are as follows:

C. Mechanism Type	Name and Address of Issuer	Mechanism Number	Coverage Amount	Coverage Period	Corrective Action	Third Party Comp
INSURANCE	INDIAN HARBOR INSURANCE Co. 70 SEAVIEW AVE STAMFORD, CT 06902	PEC0042 03956	$1m/OCCUR $2m/AGG	11/1/19 - 11/1/20	YES	YES

Note:

Note: If you are using the State Fund as any part of your demonstration of financial responsibility, your execution and submission of this certification also certifies that you are in compliance and shall maintain compliance with all conditions for participation in the Fund. See instructions.

D. Facility Name	Facility Address
SAFETY-KLEEN SYSTEMS INC.	SEE ATTACHED
Facility Name	Facility Address
Facility Name	Facility Address

E. Signature of Tank Owner or Operator	Date	Name and Title of Tank Owner or Operator
	10/29/19	VP RISK MANAGEMENT
Signature of Witness or Notary	**Date**	**Name of Witness or Notary**
	10/29/19	Nathaniel J Wilkie

Underground Storage Tank (UST)
Liability Certificate of Insurance

CALIFORNIA UNDERGROUND STORAGE TANK LIST

11/01/19 - 11/01/20

LOCATION	TANK SIZE (GALLONS)	TANK CONTENTS
		All three tanks were removed from the site and sent to a scrap metal recycler in November 2015. Reports were submitted to CA DTSC and Los Angeles County and their approvals are pending.
10625 Hickson Street, Unit A-E El Monte, CA 97131	Was 12,000	Was Clen Solvent 150
10625 Hickson Street, Unit A-E El Monte, CA 97131	Was 12,000	Was Clen Solvent 150 (4-IN-1)
10625 Hickson Street, Unit A-E El Monte, CA 97131	Was 12,000	Was Aqueous Waste
3561 S. Maple Avenue Fresno, CA 93725	12,000	Used Solvent - APW
3561 S. Maple Avenue Fresno, CA 93725	12,000	Water
7979 Palm Avenue Highland, CA 92346	12,000	Used Solvent - APW
7979 Palm Avenue Highland, CA 92346	12,000	Clean Solvent - (4-IN-1)
2918 Worthen Ave Los Angeles, CA 90039	12,000	Clean Solvent - (4-IN-1)
2918 Worthen Ave Los Angeles, CA 90039	12,000	Aqueous Waste
6000 88th Street Sacramento, CA 95828	15,000	Used Solvent 150
6000 88th Street Sacramento, CA 95828	15,000	Clean Solvent 150
2120 South Yale Santa Ana, CA 92704	12,000	Used Solvent - Aqueous
2120 South Yale Santa Ana, CA 92704	12,000	Clean Solvent - 150
2120 South Yale Santa Ana, CA 92704	12,000	Clean Solvent - 4-IN-1